# Attachment D

# Revised Traffic Impact Assessment

01/08/2025

Reference number CHK50769410

# SECTION 16 PLANNING APPLICATION FOR PROPOSED SOCIAL WELFARE FACILITY (RESIDENTIAL CARE HOME FOR THE ELDERLY), SHOP AND SERVICES (MEDICAL CONSULTING ROOM INCLUDING CLINIC) AND PUBLIC VEHICLE PARK (PRIVATE CAR ONLY) IN "VILLAGE TYPE DEVELOPMENT" ZONE AT LOTS 76 S.G (PART), 76 S.H (PART) IN D.D. 101 AND ADJOINING GOVERNMENT LAND, MAI PO, YUEN LONG

# TRAFFIC IMPACT ASSESSMENT REPORT

SYSTRA MVA

| IDENTIFICATION TABLE | |
|---|---|
| **Client/Project owner** | Gotland Enterprises Limited |
| **Project** | Section 16 Planning Application for Proposed Social Welfare Facility (Residential Care Home for the Elderly), Shop and Services (Medical Consulting Room including Clinic) and Public Vehicle Park (Private Car Only) in "Village Type Development" Zone at Lots 76 S.G (Part), 76 S.H (Part) in D.D. 101 and adjoining Government Land, Mai Po, Yuen Long |
| **Type of document** | Traffic Impact Assessment Report |
| **Date** | 01/08/2025 |
| **File name** | Lot No. 76 S.G & 76 S.H in D.D. 101 TIA Report .docx |
| **Reference number** | CHK50769410 |

**MVA Hong Kong Limited**
22/F Genesis • 33-35 Wong Chuk Hang Road • Hong Kong
T. +852 2529 7037 • F. +852 2527 8490 • E. info@mvaasia.com • www.mvaasia.com

# TABLE OF CONTENTS


| | | |
|---|---|---|
| **1.** | **INTRODUCTION** | **1** |
| 1.1 | BACKGROUND | 1 |
| 1.2 | STUDY OBJECTIVE | 1 |
| 1.3 | REPORT STRUCTURE | 1 |
| **2.** | **TRAFFIC CONTEXT** | **2** |
| 2.1 | EXISTING ROAD NETWORK | 2 |
| 2.2 | PUBLIC TRANSPORT SERVICES | 2 |
| 2.3 | JUNCTION OPERATIONAL PERFORMANCE | 3 |
| **3.** | **THE REDEVELOPMENT** | **5** |
| 3.1 | DEVELOPMENT PARAMETER | 5 |
| 3.2 | INTERNAL TRAFFIC ARRANGEMENT | 5 |
| 3.3 | INTERNAL TRANSPORT FACILITY | 6 |
| **4.** | **TRAFFIC FORECASTS** | **8** |
| 4.1 | FORECASTING ASSUMPTIONS AND METHODOLOGY | 8 |
| 4.2 | FORECASTING SCENARIOS | 12 |
| **5.** | **TRAFFIC IMPACT ASSESSMENT** | **14** |
| 5.1 | JUNCTION OPERATIONAL PERFORMANCE | 14 |
| 5.2 | LINK ASSESSMENT | 14 |
| 5.3 | TRAFFIC QUEUE ASSESSMENT | 15 |
| 5.4 | SENSITIVITY TEST | 16 |
| **6.** | **PUBLIC TRANSPORT ASSESSMENT** | **18** |
| 6.1 | PUBLIC TRANSPORT SERVICES IN THE VICINITY | 18 |
| 6.2 | ADDITIONAL TRAFFIC DEMAND FROM THE PROPOSED DEVELOPMENT | 19 |
| 6.3 | PEDESTRIAN FLOW AND QUEUING SPACE ASSESSMENT | 20 |
| 6.4 | YEAR 2031 PEDESTRIAN FLOW AND QUEUING SPACE ASSESSMENT | 21 |
| **7.** | **CONCLUSION** | **23** |
| 7.1 | SUMMARY | 23 |
| 7.2 | CONCLUSION | 23 |

**Appendix A** Junction Calculation Sheets

**Appendix B** Swept Path Analysis

## LIST OF DRAWINGS


| | | |
|---|---|---|
| Drawing 1.1 | Site Location Plan | 1 |
| Drawing 2.1 | Existing Public Transport Services | 2 |
| Drawing 2.2 | Identified Key Local Junctions | 3 |
| Drawing 2.3 | Existing Junction Layout of Castle Peak Road / Tam Kon Chau Road (A) | 3 |
| Drawing 2.4 | Existing Junction Layout of Castle Peak Road / San Tam Road (B) | 3 |
| Drawing 2.5 | Existing Junction Layout of Castle Peak Road / Mai Po Road (C) | 3 |
| Drawing 2.6 | Existing Junction Layout of Castle Peak Road / Shek Wu Wai Road (D) | 3 |
| Drawing 2.7 | Existing Junction Layout of Castle Peak Road / Kwu Tung Road (E) | 3 |
| Drawing 2.8 | Existing Junction Layout of Shek Wu Wai Road / San Tin Highway Slip Road (F) | 3 |
| Drawing 2.9 | Existing Junction Layout of Mai Po Lung Road / Shek Wu Wai Road (G) | 3 |
| Drawing 2.10 | Year 2024 Observed Traffic Flows | 3 |
| Drawing 3.1 | Master Layout Plan | 5 |
| Drawing 3.2 | Development Ingress Route | 5 |
| Drawing 3.3 | Development Egress Route | 5 |
| Drawing 4.1 | Location of ATC Counting Stations in the Vicinity | 7 |
| Drawing 4.2 | Development Traffic Flows | 12 |
| Drawing 4.3 | Year 2031 Reference Traffic Flows | 13 |
| Drawing 4.4 | Year 2031 Design Traffic Flows | 13 |
| Drawing 5.1 | Planned Junction Layout of Castle Peak Road/ Shek Wu Wai Road (D) | 14 |
| Drawing 5.2 | Planned Junction Layout of Shek Wu Wai Road / San Tin Highway Slip Road (F) | 14 |
| Drawing 5.3 | Suggested Road Widening Scheme between the Site Access and the Junction of Castle Peak Road / Tam Kon Chau Road (A) | 15 |
| Drawing 6.1 | Current and Proposed Pedestrian Facilities | 20 |

## LIST OF TABLES


| | | |
|---|---|---|
| Table 2.1 | Public Transport Details and Servicing Schedules | 2 |
| Table 2.2 | Identified Key Local Junctions | 3 |
| Table 2.3 | Current Junction Operational Performance | 3 |
| Table 3.1 | Proposed Development Parameters | 5 |
| Table 3.2 | Provision of Internal Transport Facility on relevant RCHE | 6 |
| Table 3.3 | Proposed Internal Transport Facility | 7 |
| Table 4.1 | AADT of nearby ATC Traffic Counts between Years 2019 to 2023 | 8 |
| Table 4.2 | Hong Kong Resident Population between Year 2024 and Year 2031 | 9 |
| Table 4.3 | Projected Population by Tertiary Planning Unit (TPU), 2021-2027 | 9 |
| Table 4.4 | Phasing of San Tin Technopole | 10 |
| Table 4.5 | Development Trips of San Tin Technopole Adopted in Assessment | 10 |
| Table 4.6 | Estimated Trip Generations of Adjacent Planned Developments | 11 |
| Table 4.7 | Traffic Trips of Similar RCHE Survey | 12 |
| Table 4.8 | Estimated Traffic Trips for Proposed Development | 12 |
| Table 5.1 | Junction Operational Performance in Year 2031 | 14 |
| Table 5.2 | Tam Kon Chau Road Assessment in Year 2024 and Year 2031 Design Case | 15 |
| Table 5.3 | Tam Kon Chau Road Assessment in Year 2031 Design Case | 15 |
| Table 5.4 | Vehicle Queuing Analysis | 16 |
| Table 5.5 | Phasing of San Tin Technopole | 16 |
| Table 5.6 | Development Trips of San Tin Technopole Adopted in Assessment | 16 |
| Table 5.7 | Comparison of Trip Generations between STT and Proposed Development | 17 |
| Table 6.1 | Existing Road-based Public Transport Services in the Vicinity (AM & PM Peak) | 18 |
| Table 6.2 | Estimation of Total Public Transport Trips from Proposed Development | 19 |
| Table 6.3 | Estimated Year 2031 Public Transport Demands | 19 |
| Table 6.4 | 2025 Observed Level-Of-Service Assessment | 20 |
| Table 6.5 | 2025 Observed Queuing Area Level-Of-Service Assessment at Bus Stops | 20 |
| Table 6.6 | 2031 Level-Of-Service Assessment | 21 |
| Table 6.7 | 2031 Queuing Area Level-Of-Service Assessment for Bus Stops | 21 |

# 1. INTRODUCTION

## 1.1 Background

1.1.1 The application site is located at Tam Kon Chau Road, as indicated in **Drawing 1.1**. It is currently zoned as a "Village Type Development (V)" under the latest approved Mai Po & Fairview Park Outline Zoning Plan (OZP) no. S/YL-MP/6.

1.1.2 The application site is currently vacant and in close proximity to several sites for temporary open storages and vehicle parking, which are expected to be phased out in the near future due to their incompatibility with the long-term planning intention under the OZP. It is proposed to be redeveloped into a Residential Care Home for the Elderly (RCHE).

## 1.2 Study Objective

1.2.1 The main objective of this study is to investigate the anticipated traffic impact of Residential Care Home for the Elderly (RCHE) Redevelopment to the adjacent local road network, by performing the following tasks:

- review the current traffic condition in the vicinity;
- study the traffic related matters of the proposed MLP;
- produce traffic forecasts on the adjacent local road network;
- assess the traffic impact of this development scheme to the adjacent local road network and suggest mitigation measures, if applicable.

## 1.3 Report Structure

1.3.1 Following this introductory chapter, there are six further chapters.

- Chapter 2 – Traffic Context, review the current traffic condition in the vicinity;
- Chapter 3 – The Redevelopment, introduces the proposed Residential Care Home for the Elderly (RCHE) scheme, planning parameters, internal transport facilities and etc.;
- Chapter 4 – Traffic Forecasts, describes the traffic forecasting methodology and presents the results;
- Chapter 5 – Traffic Impact Assessment, presents the assessment findings and suggests mitigation measures, if applicable;
- Chapter 6 – Public Transport Assessment, analysis the public transport services impact induced by the proposed development; and,
- Chapter 7 – Summary and Conclusion, summarises the study findings and presents the conclusion accordingly.

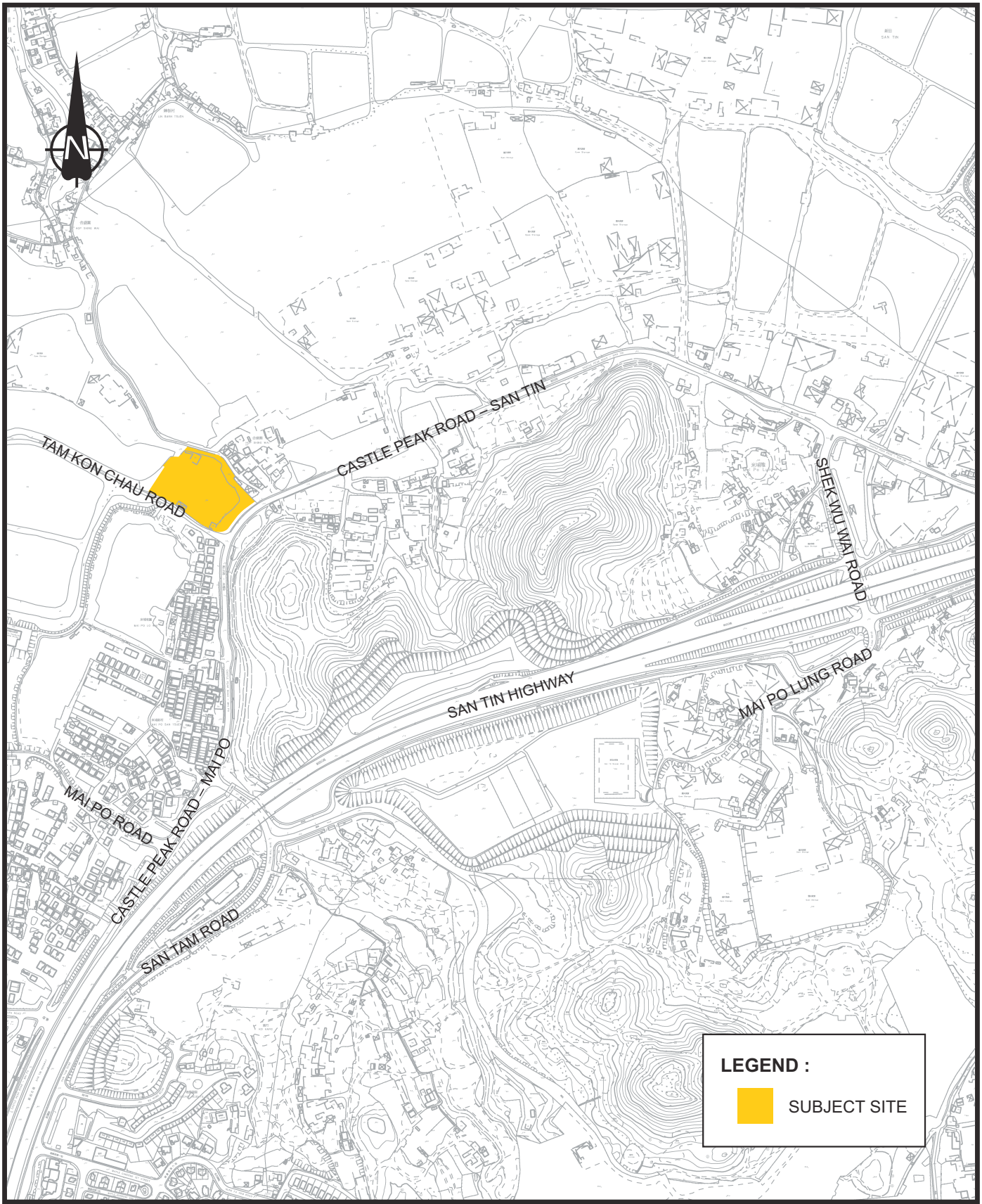


| Rev. | Description | Checked | Date | Rev. | Description | Checked | Date |
|---|---|---|---|---|---|---|---|
| - | - | - | - | - | - | - | - |
| - | - | - | - | - | - | - | - |

Project Title

TRAFFIC CONSULTANCY SERVICES FOR PROPOSED ELDERLY HOME IN LOT DD101 76 S.G. & 76 S.H. IN MAI PO, NT

Drawing Title

# SITE LOCATION PLAN

| Designed | Checked | Scale | Date | Drawing No. | Rev. |
|---|---|---|---|---|---|
| CCT | JPP | NTS | FEB 2024 | 1.1 | - |

CHK50769410/TIA/F11.CDR/LLH/26FEB24

Original Size : A4

# 2. TRAFFIC CONTEXT

## 2.1 Existing Road Network

2.1.1 The application site is located at the north-east side of Tam Kon Chau Road. The Subject Site is bounded by Tam Kon Chau Road to the Southwest, Castle Peak Road – San Tin to the Southeast, the location is indicated in **Drawing 1.1**. The vehicular access routes of the application site are through Tam Kon Chau Road, Castle Peak Road – Mai Po, Castle Peak Road – San Tin, San Tin Highway, Shek Wu Wai Road and Kwu Tung Road.

2.1.2 Tam Kon Chau Road connects the application site to the Castle Peak Road -San Tin & Mai Po.

2.1.3 Castle Peak Road – Mai Po & San Tin are both single 2-lane rural road, linking up Castle Peak Road (Tam Mei) on the South and Castle Peak Road (Chau Tau) on the North respectively.

2.1.4 San Tin Highway is a dual 6-lane expressway. San Tin Highway connects Fanling Highway as its north-eastern, and Yuen Long Highway at the southwestern end of the San Tin Highway.

2.1.5 Shek Wu Wai Road is a single 2-lane carriageway, which connects Castle Peak Road – San Tin to the north and Mai Po Lung Road to the south.

2.1.6 Subject to the project of San Tin Technopole, the proposed road network will be upgraded to provide better linkage and strengthen future connectivity for developments located at the North and South of the San Tin Highway. At the existing Shek Wu Wai Interchange (SWWI), apart from improvement of existing slip roads at its western side connecting to San Tin Highway, a pair of new slip roads is proposed at the eastern side of SWWI to facilitate traffic movement. Also, the existing junction of Castle Peak Road – San Tin / Shek Wu Wai Road would be upgraded from priority junction to 4-arm signalized junction.

2.1.7 Kwu Tung Road is also a single 2-lane carriageway, which starts from the Kwu Tung Castle Peak Road in North District, and ends at the San Tin Castle Peak Road in Yuen Long District.

## 2.2 Public Transport Services

2.2.1 There are two bus stations near the application site, namely Mai Po Bus Station. There is one franchised bus route - 76K, and three Green Mini-Bus (GMB) routes – 75, 76 & 78, stopping at these two bus stations. And GMB Route 75 has a special route stops at Mai Po Bus Station.

2.2.2 The two bus stops located within 200-meter walking distance from the proposed development. The nearby public transport services are indicated in **Drawing 2.1**, and shown in **Table 2.1**.

**Table 2.1 Public Transport Details and Servicing Schedules**

| Route No. | Destinations | | Frequency (min) |
|---|---|---|---|
| **Franchised Bus** | | | |
| 76K | Ching Ho Estate | Long Ping Estate | 20 |
| **GMB** | | | |
| 75 | Lok Ma Chau Spur Line | Yuen Long (Fook Hong Street) | 15 |
| 75 (Special Trip) | Ha Wan Tsuen | Yuen Long (Fook Hong Street) | 15 |
| 76 | Siu Hum Tsuen | Yuen Long (Fook Hong Street) | 15 |
| 78 | Lok Ma Chau (San Tin) | Pat Heung Road (Tai Lam Interchange) | 20 |

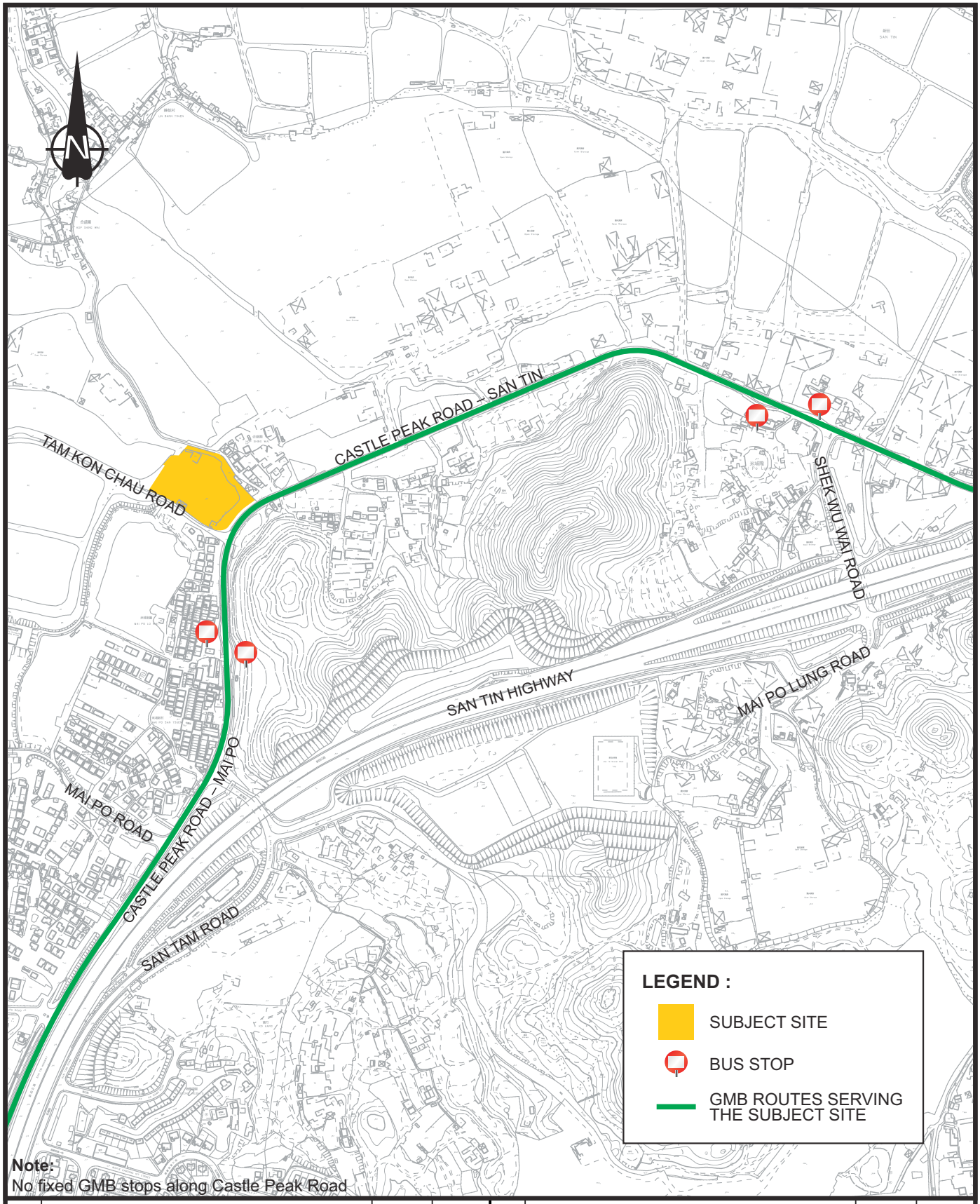


**Note:**
No fixed GMB stops along Castle Peak Road

| Rev. | Description | Checked | Date | Rev. | Description | Checked | Date |
|---|---|---|---|---|---|---|---|
| - | - | - | - | - | - | - | - |
| - | - | - | - | - | - | - | - |

**Project Title**
TRAFFIC CONSULTANCY SERVICES FOR PROPOSED ELDERLY HOME IN LOT DD101 76 S.G. & 76 S.H. IN MAI PO, NT

**Drawing Title**
# EXISTING PUBLIC TRANSPORT SERVICES

| Designed | Checked | Scale | Date | Drawing No. | Rev. |
|---|---|---|---|---|---|
| CCT | JPP | NTS | FEB 2024 | 2.1 | - |

SYSTRA MVA

CHK50769410/TIA/F21.CDR/LLH/26FEB24

Original Size : A4

## 2.3 Junction Operational Performance

2.3.1 A total of seven key local junctions have been identified for assessment purpose in this study. The identified key local junctions, as listed in **Table 2.2**, are indicated in **Drawing 2.2.**

**Table 2.2 Identified Key Local Junctions**

| Ref. (1) | Junction | Control Method | Drawing No. |
|---|---|---|---|
| A | Castle Peak Road / TAM Kon Chau Road | Priority | 2.3 |
| B | Castle Peak Road / San Tam Road | Priority | 2.4 |
| C | Castle Peak Road / Mai Po Road | Priority | 2.5 |
| D | Castle Peak Road / Shek Wu Wai Road | Priority | 2.6 |
| E | Castle Peak Road / Kwu Tung Road | Priority | 2.7 |
| F | Shek Wu Wai Road / San Tin Highway Slip Road | Priority | 2.8 |
| G | Mai Po Lung Road / Shek Wu Wai Road | Priority | 2.9 |

Remarks:
(1) Refer to **Drawing 2.2**.

2.3.2 In order to establish the current peak hour traffic condition in the area, traffic surveys in the form of manual classified count were conducted at the identified key local junctions during the morning and evening peak hours of a typical weekday.

2.3.3 The traffic surveys were arranged and conducted during morning peak hours between 07:30 – 09:30 and the evening peak hours between 17:00 – 19:00 on a typical weekday in early-January 2024. The survey results reveal that the weekday morning and evening peak hour occur during 08:30 – 09:30 and 17:15 – 18:15 respectively. The observed peak hour traffic flows are summarised in **Drawing 2.10**.

2.3.4 Junction capacity assessments have been conducted to evaluate the current operational performance of the identified key local junctions. The assessments would be validated with the site observations, such as queue length, by applying appropriate site factors and adjustments accordingly in order to reflect the actual site conditions. The assessment results are summarised in **Table 2.3**. The junction calculation sheets are attached in **Appendix A**.

**Table 2.3 Current Junction Operational Performance**

| Ref. (1) | Junction | RC/RFC (2) | |
|---|---|---|---|
| | | AM Peak | PM Peak |
| A | Castle Peak Road / TAM Kon Chau Road | 0.16 | 0.18 |
| B | Castle Peak Road / San Tam Road | 0.20 | 0.17 |
| C | Castle Peak Road / Mai Po Road | 0.11 | 0.12 |
| D | Castle Peak Road / Shek Wu Wai Road | 0.78 | 0.63 |
| E | Castle Peak Road / Kwu Tung Road | 0.40 | 0.41 |
| F | Shek Wu Wai Road / San Tin Highway Slip Road | 0.54 | 0.61 |
| G | Mai Po Lung Road / Shek Wu Wai Road | 0.58 | 0.43 |

Remarks:
(1) Refer to **Drawing 2.2**.
(2) The operational performance of a signal junction is represented in Reserve Capacity (RC), which is defined as overloaded while the RC is less than 0%, The operational performance of a priority/roundabout is represented in Ratio to Flow Capacity (RFC), which is defined as overloaded if RFC over 1.00.

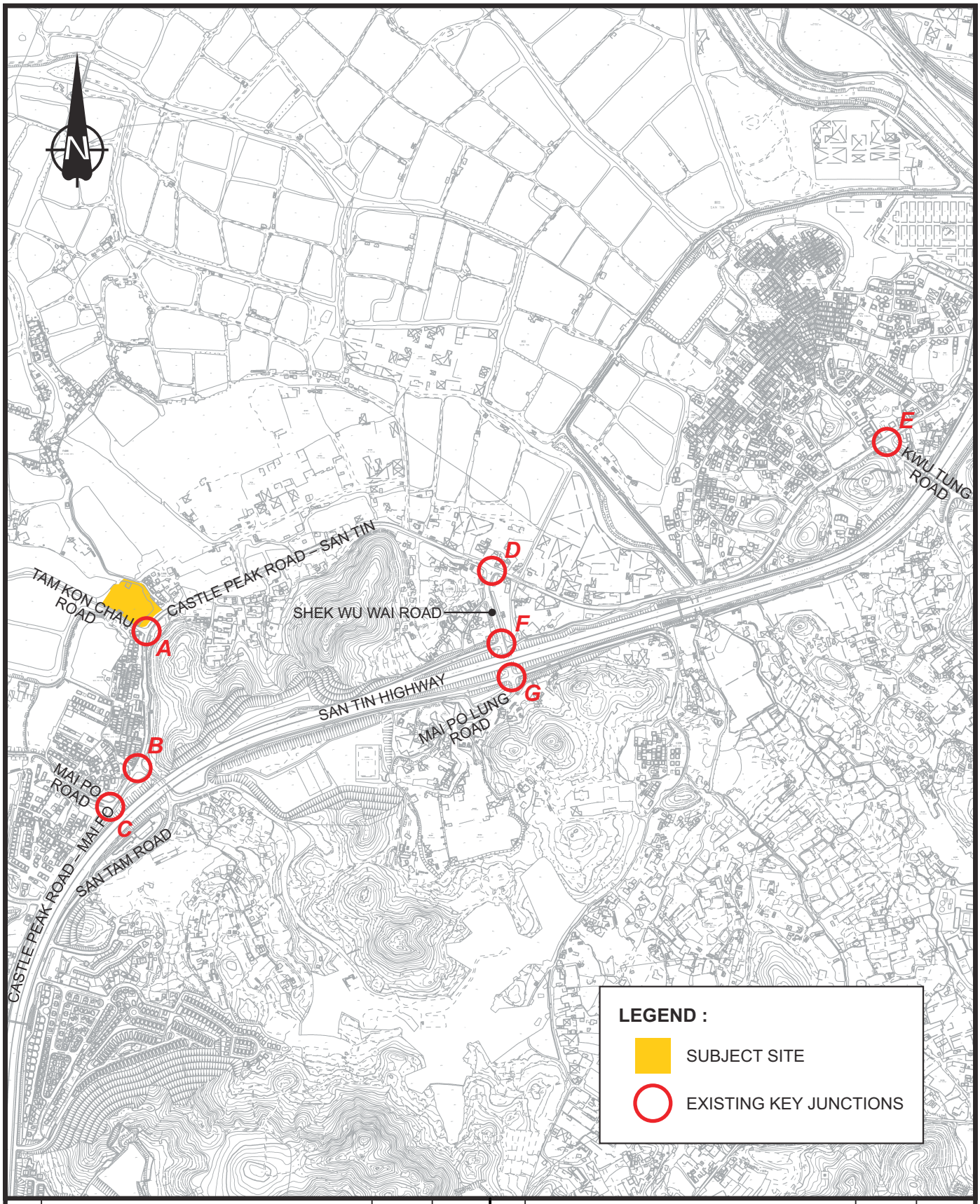


| Rev. | Description | Checked | Date | Rev. | Description | Checked | Date |
|---|---|---|---|---|---|---|---|
| - | - | - | - | - | - | - | - |
| A | TD'S COMMENTS INCORPORATED | JPP | 28MAY25 | - | - | - | - |

Project Title

TRAFFIC CONSULTANCY SERVICES FOR PROPOSED ELDERLY HOME IN LOT DD101 76 S.G. & 76 S.H. IN MAI PO, NT

Drawing Title

# IDENTIFIED KEY LOCAL JUNCTIONS

| Designed | Checked | Scale | Date | Drawing No. | Rev. |
|---|---|---|---|---|---|
| CCT | JPP | NTS | AUG 2024 | 2.2 | A |

SYSTRA MVA

CHK50769410/TIA/F22-A.CDR/LLH/28MAY25

Original Size : A4

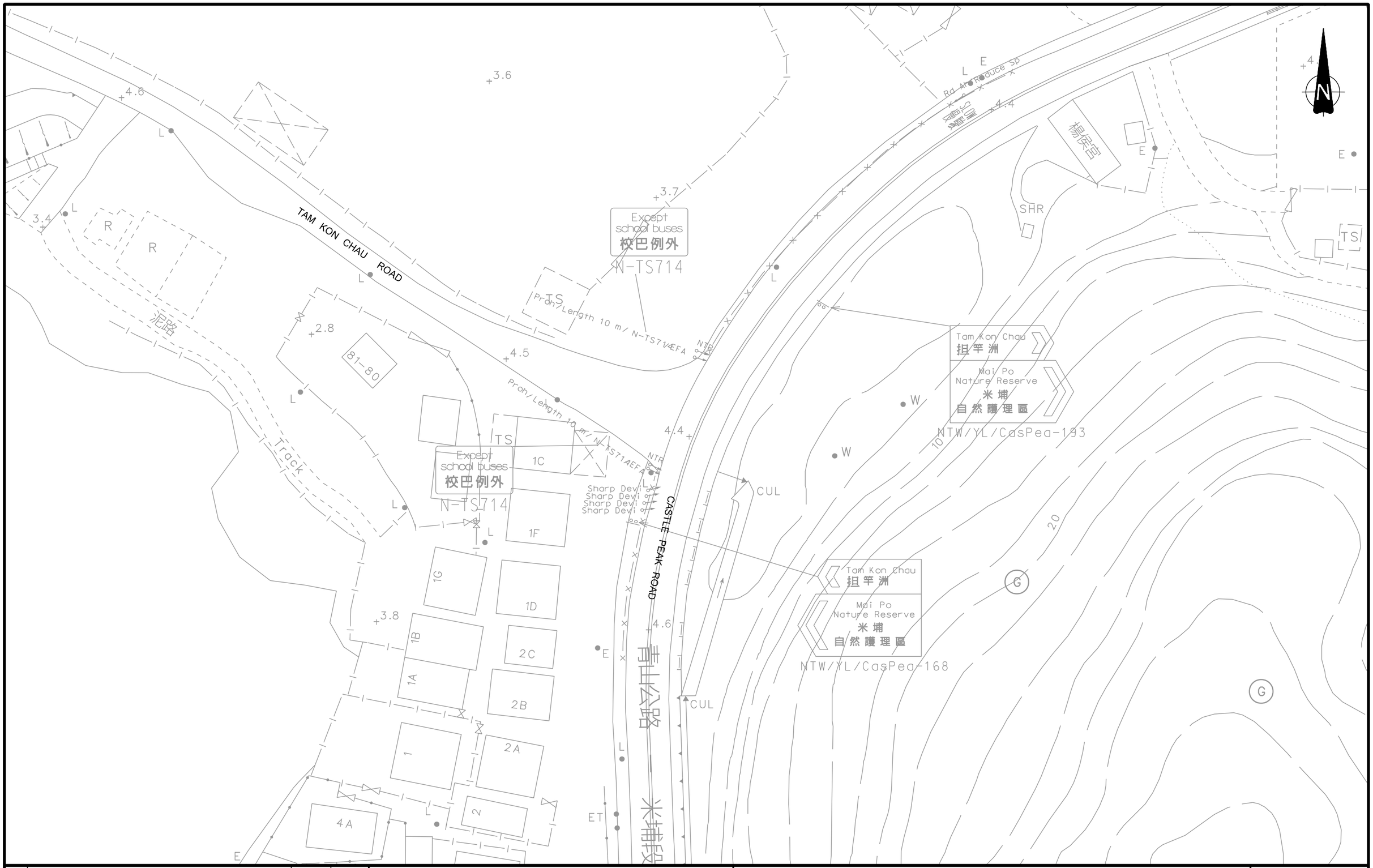


| Rev. | Description | Checked | Date |
|---|---|---|---|
| - | - | - | - |
| - | - | - | - |
| - | - | - | - |
| - | - | - | - |

Project Title

TRAFFIC CONSULTANCY SERVICES FOR
PROPOSED ELDERLY HOME IN
LOT DD101 76 S.G. & 76 S.H. IN
MAI PO. NT

Drawing Title

# EXISTING JUNCTION LAYOUT OF CASTLE PEAK ROAD / TAM KON CHAU ROAD (A)

| Designed | Checked | Scale | Date | Drawing No. | Rev. |
|---|---|---|---|---|---|
| CCT | JPP | 1:500(A3) | FEB 2024 | 2.3 | - |

CHK50769410/TIA/F23.DGN/TKH/28FEB24

Original Size : A3

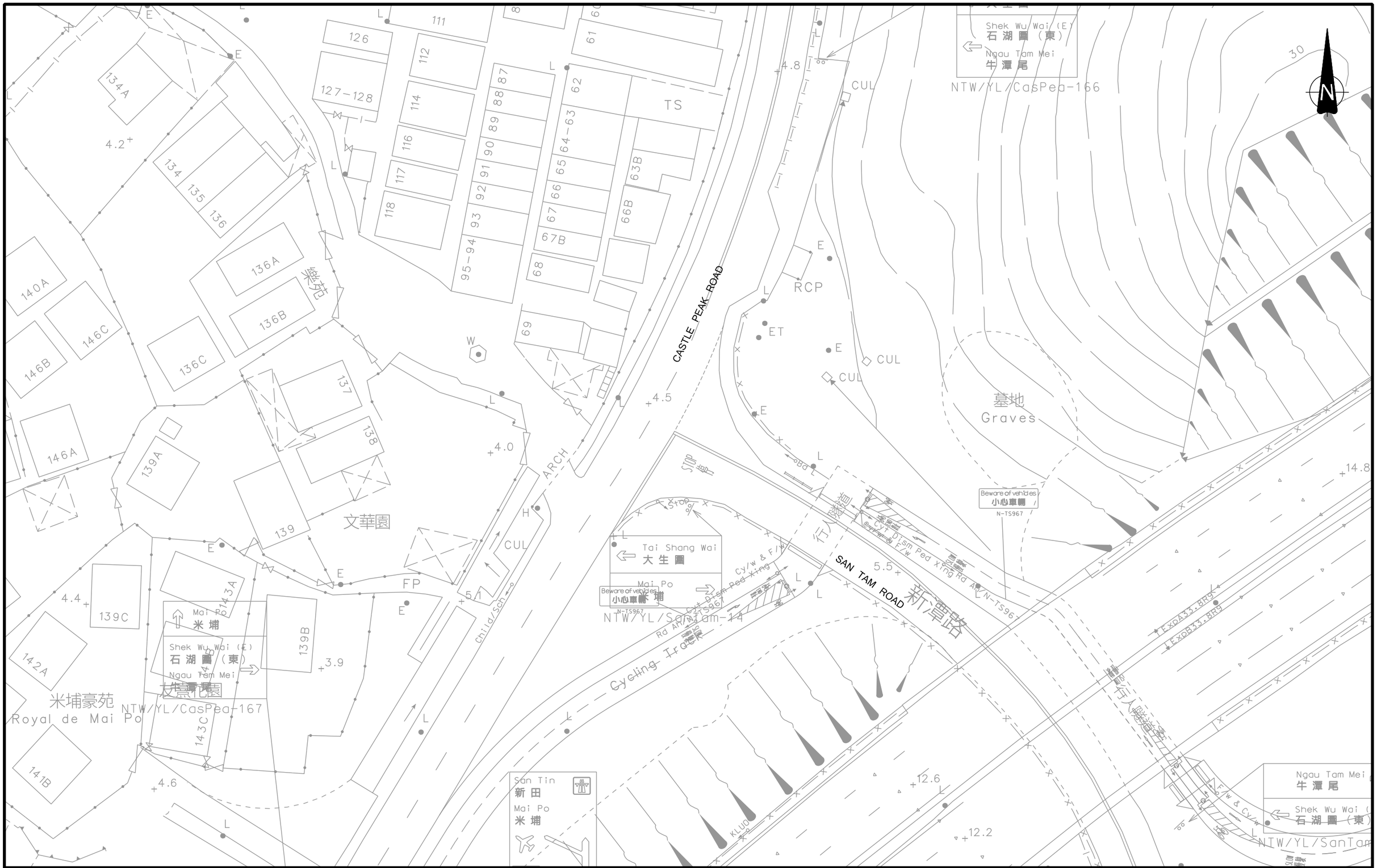
CASTLE PEAK ROAD
SAN TAM ROAD
新潭路
CASTLE PEAK ROAD
新田石路
Shek Wu Wai (E)
石湖圍（東）
Ngau Tam Mei
牛潭尾
NTW/YL/CasPea-166
Tai Shang Wai
大生圍
Mai Po
米埔
NTW/YL/SanTam-14
San Tin
新田
Mai Po
米埔
Beware of vehicles
小心車輛
N-TS967
Cyclists Dismount
Cyclists Dismount & Ped Xing
Cyclists Dismount & Ped Xing Ahead
Cyclists Dismount & Ped Xing Ahead
Cycling Track
Cycling Track Ahead
Cyclists Dismount & Ped Xing
Cyclists Dismount & Ped Xing Ahead
Cyclists Dismount & Ped Xing

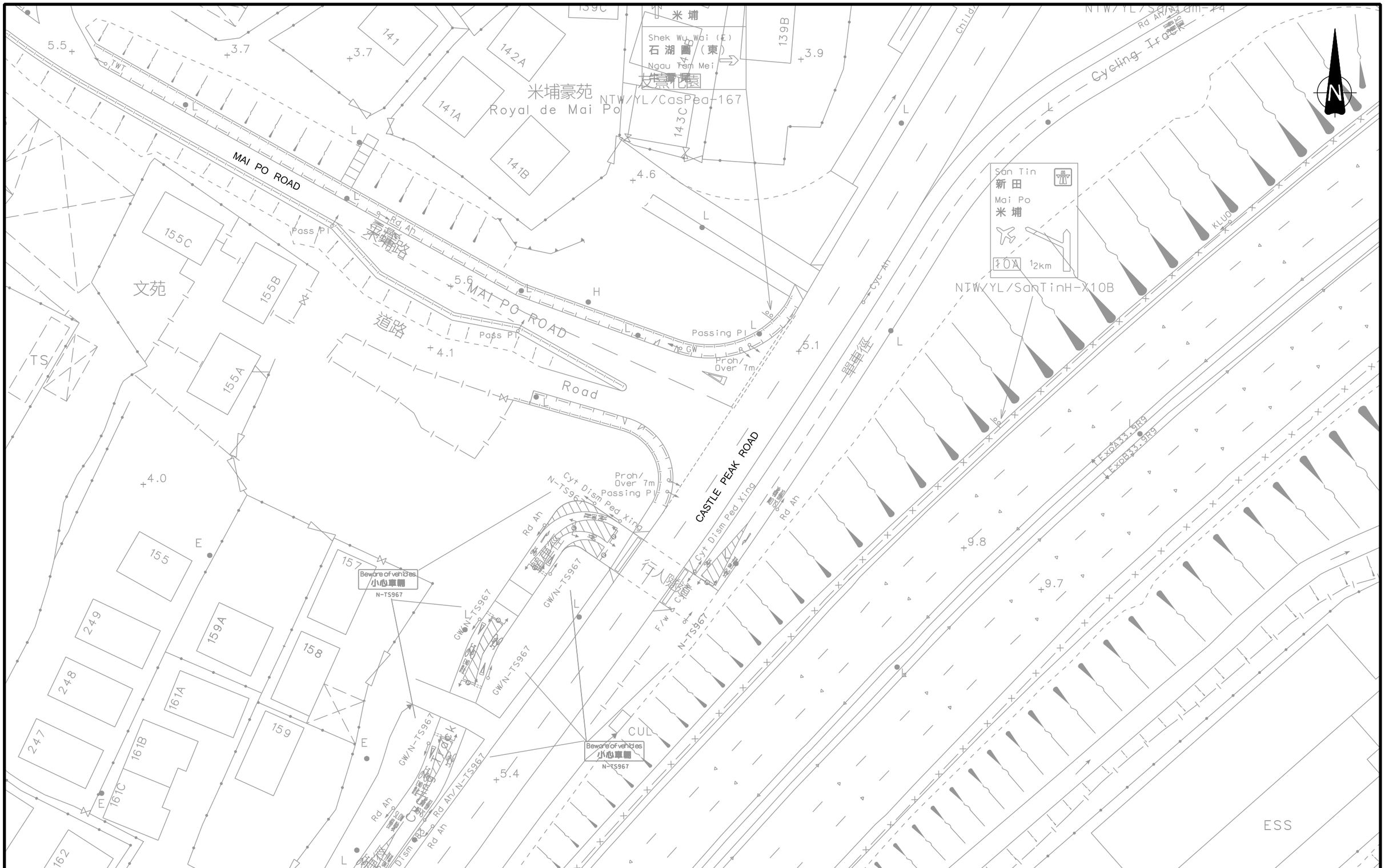


| Rev. | Description | Checked | Date |
|---|---|---|---|
| - | - | - | - |
| - | - | - | - |
| - | - | - | - |
| - | - | - | - |

Project Title

TRAFFIC CONSULTANCY SERVICES FOR
PROPOSED ELDERLY HOME IN
LOT DD101 76 S.G. & 76 S.H. IN
MAI PO. NT

Drawing Title

# EXISTING JUNCTION LAYOUT OF CASTLE PEAK ROAD / MAI PO ROAD(C)

| Designed | Checked | Scale | Date | Drawing No. | Rev. |
|---|---|---|---|---|---|
| CCT | JPP | 1:500(A3) | FEB 2024 | **2.5** | - |

SYSTRA MVA

CHK50769410/TIA/F25.DGN/TKH/28FEB24

Original Size : A3

青山公路 — 新田段
CASTLE PEAK ROAD — SAN TIN
CASTLE PEAK ROAD
SHEK WU WAI ROAD
Po Lung
米埔隴
Ramp
Ped Ah
CCT
RCP
ET
FB
TS
BS
GW
NTW/YL/CasPea-X233A
NTW/YL/CasPea-196
NTW/YL/CasPea-X183A
San Tin 新田
Yuen Long 元朗
Kowloon 九龍
Shek Wu Wai 石湖圍
Mai Po 米埔
3.8
4.6
4.3
4.7
4.4
4.2
4.0
4.5
4.7
5.6
5.2
4.8
16.0
9.2
6.2
8.4
4.4
3.7

| Rev. | Description | Checked | Date |
|---|---|---|---|
| - | - | - | - |
| - | - | - | - |
| - | - | - | - |
| - | - | - | - |

Project Title

TRAFFIC CONSULTANCY SERVICES FOR
PROPOSED ELDERLY HOME IN
LOT DD101 76 S.G. & 76 S.H. IN
MAI PO. NT

Drawing Title

# EXISTING JUNCTION LAYOUT OF CASTLE PEAK ROAD / SHEK WU WAI ROAD (D)

| Designed | Checked | Scale | Date | Drawing No. | Rev. |
|---|---|---|---|---|---|
| CCT | JPP | 1:500(A3) | MAR 2024 | 2.6 | - |

SYSTRA MVA

CHK50769410/TIA/F26.DGN/CKC/07MAR24

Original Size : A3

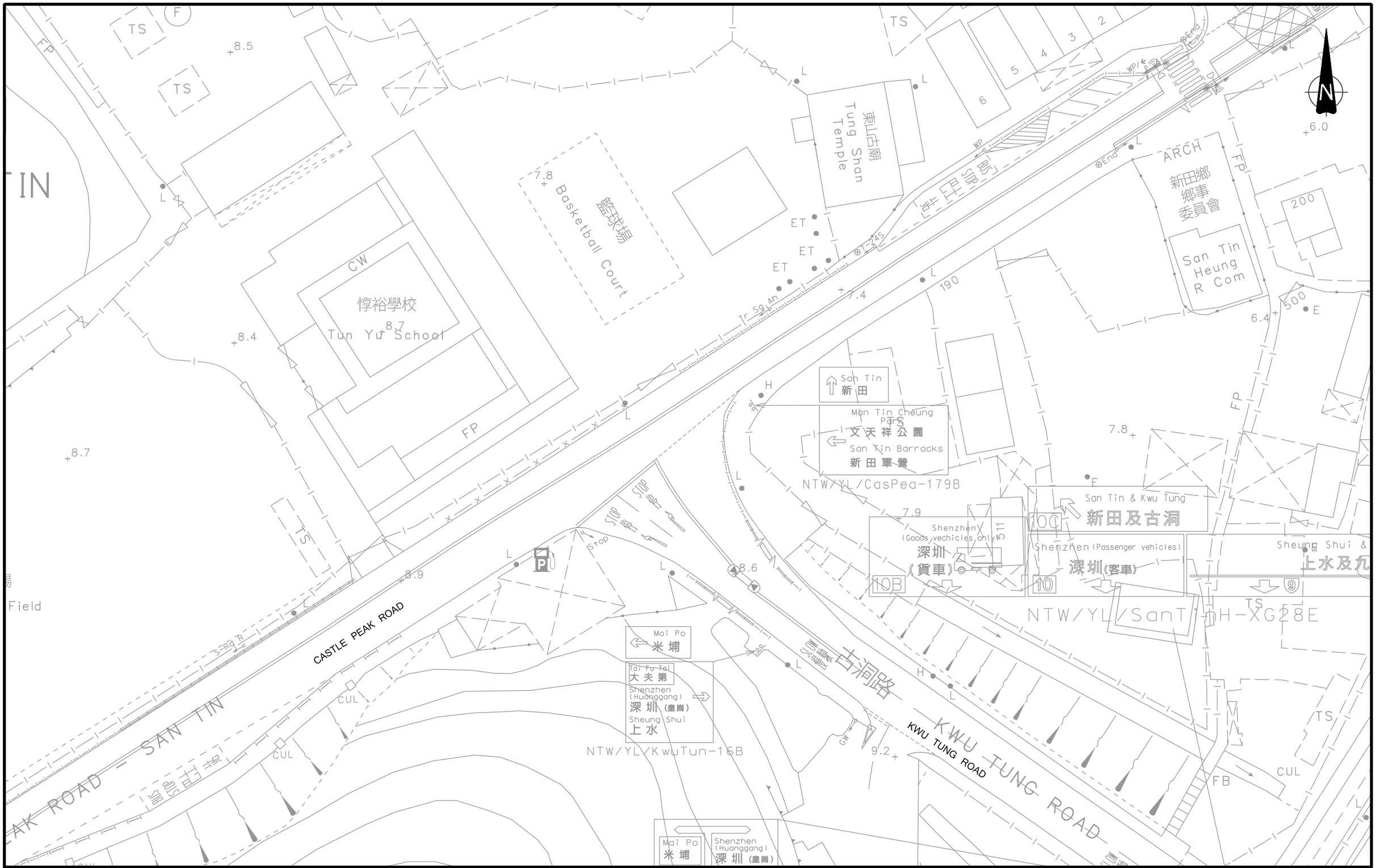


| Rev. | Description | Checked | Date |
|---|---|---|---|
| - | - | - | - |
| - | - | - | - |
| - | - | - | - |
| - | - | - | - |

Project Title

TRAFFIC CONSULTANCY SERVICES FOR
PROPOSED ELDERLY HOME IN
LOT DD101 76 S.G. & 76 S.H. IN
MAI PO. NT

Drawing Title

# EXISTING JUNCTION LAYOUT OF CASTLE PEAK ROAD / KWU TUNG ROAD (E)

| Designed | Checked | Scale | Date | Drawing No. | Rev. |
|---|---|---|---|---|---|
| CCT | JPP | 1:500(A3) | AUG 2024 | 2.7 | - |

SYSTRA MVA

CHK50769410/TIA/F27.DGN/TKH/28AUG24

Original Size : A3

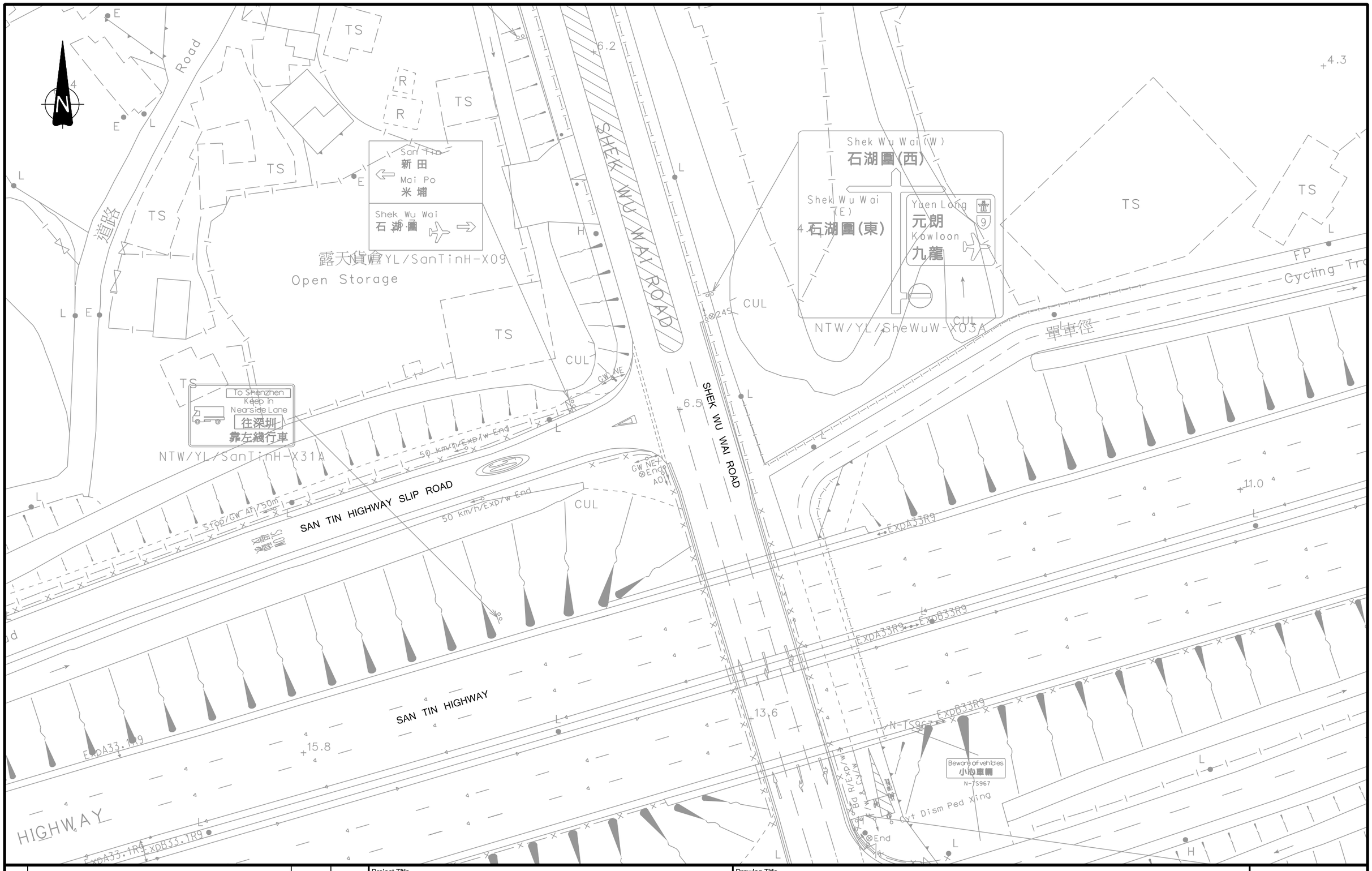


| Rev. | Description | Checked | Date |
|---|---|---|---|
| - | - | - | - |
| - | - | - | - |
| - | - | - | - |
| A | TD'S COMMENTS INCORPORATED | JPP | 23MAY25 |

Project Title

TRAFFIC CONSULTANCY SERVICES FOR
PROPOSED ELDERLY HOME IN
LOT DD101 76 S.G. & 76 S.H. IN
MAI PO. NT

Drawing Title

# EXISTING JUNCTION LAYOUT OF SHEK WU WAI ROAD / SAN TIN HIGHWAY SLIP ROAD (F)

| Designed | Checked | Scale | Date | Drawing No. | Rev. |
|---|---|---|---|---|---|
| CCT | JPP | 1:500(A3) | MAY 2025 | **2.8** | A |

SYSTRA MVA

CHK50769410/TIA/F28-A.DGN/LHO/23MAY25

Original Size : A3

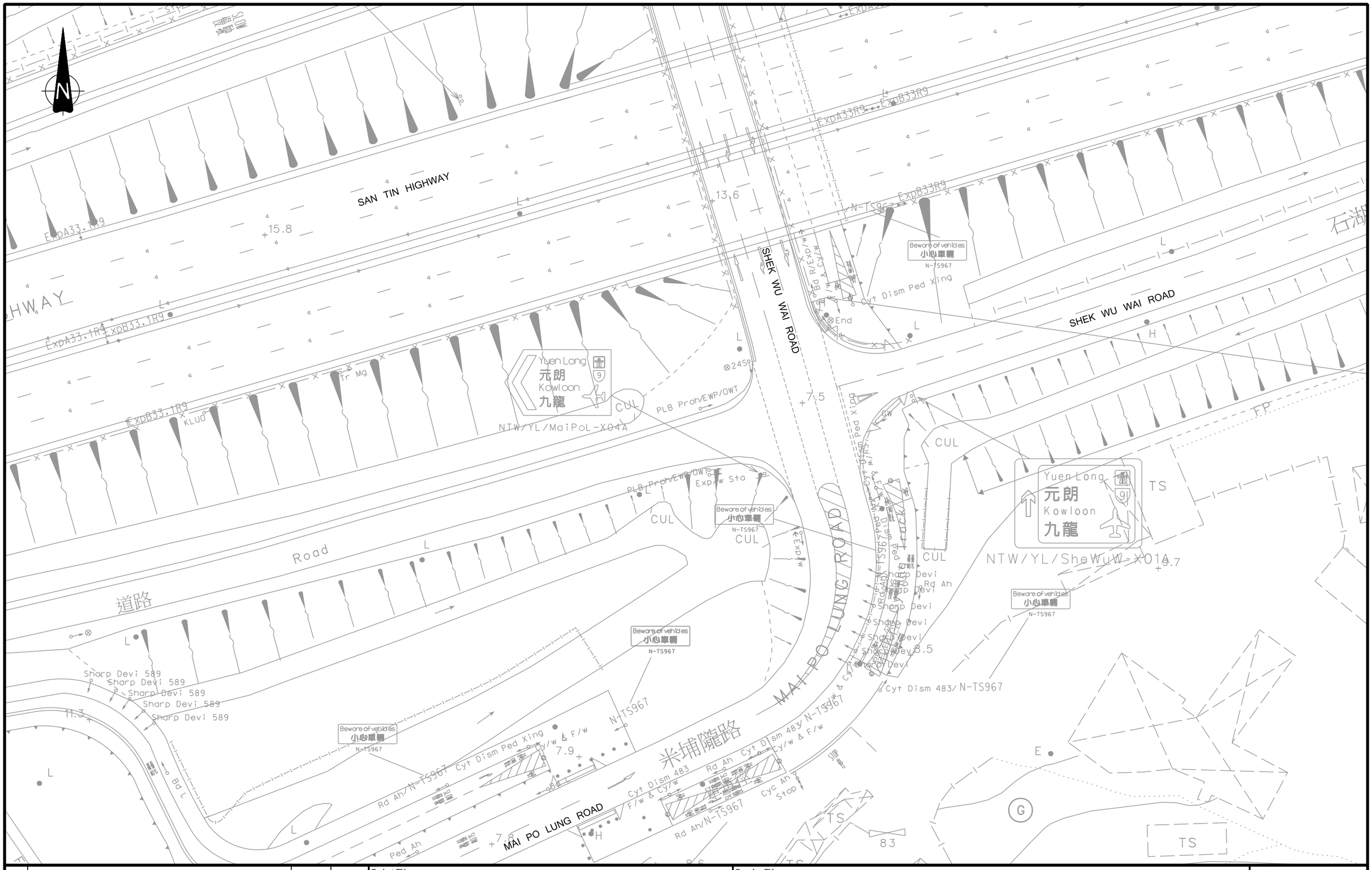


| Rev. | Description | Checked | Date |
|---|---|---|---|
| - | - | - | - |
| - | - | - | - |
| - | - | - | - |
| - | - | - | - |

Project Title

TRAFFIC CONSULTANCY SERVICES FOR
PROPOSED ELDERLY HOME IN
LOT DD101 76 S.G. & 76 S.H. IN
MAI PO. NT

Drawing Title

**EXISTING JUNCTION LAYOUT OF SHEK WU WAI ROAD / MAI PO LUNG ROAD (G)**

| Designed | Checked | Scale | Date | Drawing No. | Rev. |
|---|---|---|---|---|---|
| CCT | JPP | 1:500(A3) | MAY 2025 | **2.9** | - |

SYSTRA MVA

CHK50769410/TIA/F29.DGN/LHO/27MAY25

Original Size : A3

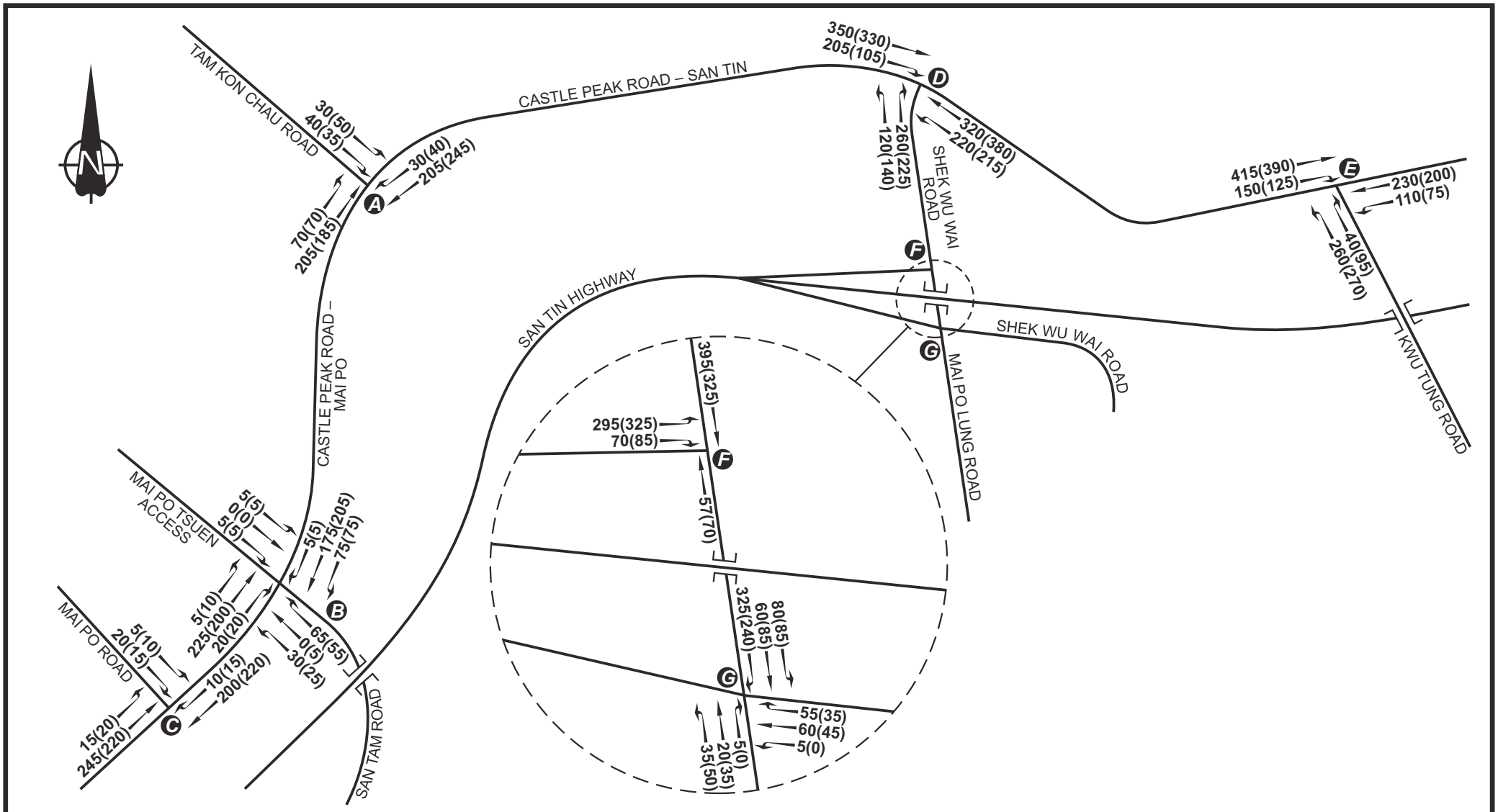


| - | - | - | - | - | - | - | - | - | - | - | - |
|---|---|---|---|---|---|---|---|---|---|---|---|
| Rev. | Description | Checked | Date | Rev. | Description | Checked | Date | Rev. | Description | Checked | Date |

**Project Title**

TRAFFIC CONSULTANCY SERVICES FOR
PROPOSED ELDERLY HOME IN
LOT DD101 76 S.G. & 76 S.H. IN MAI PO, NT

**Drawing Title**

# YEAR 2024 OBSERVED TRAFFIC FLOWS

| Designed | Checked | Scale | Date | Drawing No. | Rev. |
|---|---|---|---|---|---|
| CCT | JPP | NTS | MAY 2025 | 2.10 | - |

SYSTRA MVA

CHK50769410/TIA/F210.CDR/LLH/27MAY25

Original Size : A4

2.3.5 The assessment results indicate that all the identified key local junctions are currently operating with adequate capacity with RFC value less than 0.85 during the weekday peak hour periods.

# 3. THE REDEVELOPMENT

## 3.1 Development Parameter

3.1.1 For the purpose of Section 16 planning application, Lot DD101 76 S.G. and 76 S.H. in Mai Po is this TIA study area.

3.1.2 The proposed main development parameters of the Lot DD101 76 S.G. and 76 S.H. are summarised in **Table 3.1** and the indicative MLP is shown in **Drawing 3.1**.

**Table 3.1 Proposed Development Parameters**

| Component | Proposed Scheme for the Development Site |
|---|---|
| **Site Area ($m^2$)** | approx. 8,429 $m^2$ |
| ***Key Development Parameters*** | |
| No. of beds | 716 |
| No. of Parking Spaces | 76 |
| No. of Consulting Rooms | 6 |

3.1.3 The proposed development is scheduled to be completed by year 2028 tentatively.

## 3.2 Internal Traffic Arrangement

*Vehicular Access*

3.2.1 Under the proposed MLP, there is one vehicular access of subject site and is located TAM Kon Chau Road. A short section of widening of Tam Kon Chau Road is proposed, allowing full 2-way, 2-lane access to the site. The location of the vehicular access of Lot DD101 76 S.G. and 76 S.H. under the proposed MLP is indicated in **Drawing 3.1**.

3.2.2 All the traffic would enter / leave the site via Tam Kon Chau Road and Castle Peak Road – San Tin & Mai Po. The traffic going to/from Yuen Long would pass through Castle Peak Road – Mai Po / Tam Kon Chau Road. As for the traffic going to/from Kowloon, Hong Kong Island and New Territories West would pass through San Tin Highway / Shek Wu Wai Road / Castle Peak Road – San Tin. And the traffic going to /from New Territories East would pass through Castle Peak Road – San Tin / Kwu Tung Road. The traffic ingress and egress routings of the site are illustrated in **Drawing Nos. 3.2 and 3.3**.

*Internal Driveway*

3.2.3 The vehicular accesses and the internal transport facilities are linked up by internal driveway. Car park is located at the basement levels, and the drop-off area and loading/unloading bays are located at ground level.

*Swept Path Analysis*

| - | - | - | - | - | - | - | - | - | - | - | - |
|---|---|---|---|---|---|---|---|---|---|---|---|
| Rev. | Description | Checked | Date | Rev. | Description | Checked | Date | Rev. | Description | Checked | Date |

**Project Title**

TRAFFIC CONSULTANCY SERVICES FOR
PROPOSED ELDERLY HOME IN
LOT DD101 76 S.G. & 76 S.H. IN MAI PO, NT

**Drawing Title**

# MASTER LAYOUT PLAN

| Designed | Checked | Scale | Date | Drawing No. | Rev. |
|---|---|---|---|---|---|
| CCT | JPP | NTS | JUL 2025 | 3.1 | - |

SYSTRA MVA

CHK50769410/TIA/F31.CDR/LLH/21JUL25

Original Size : A4

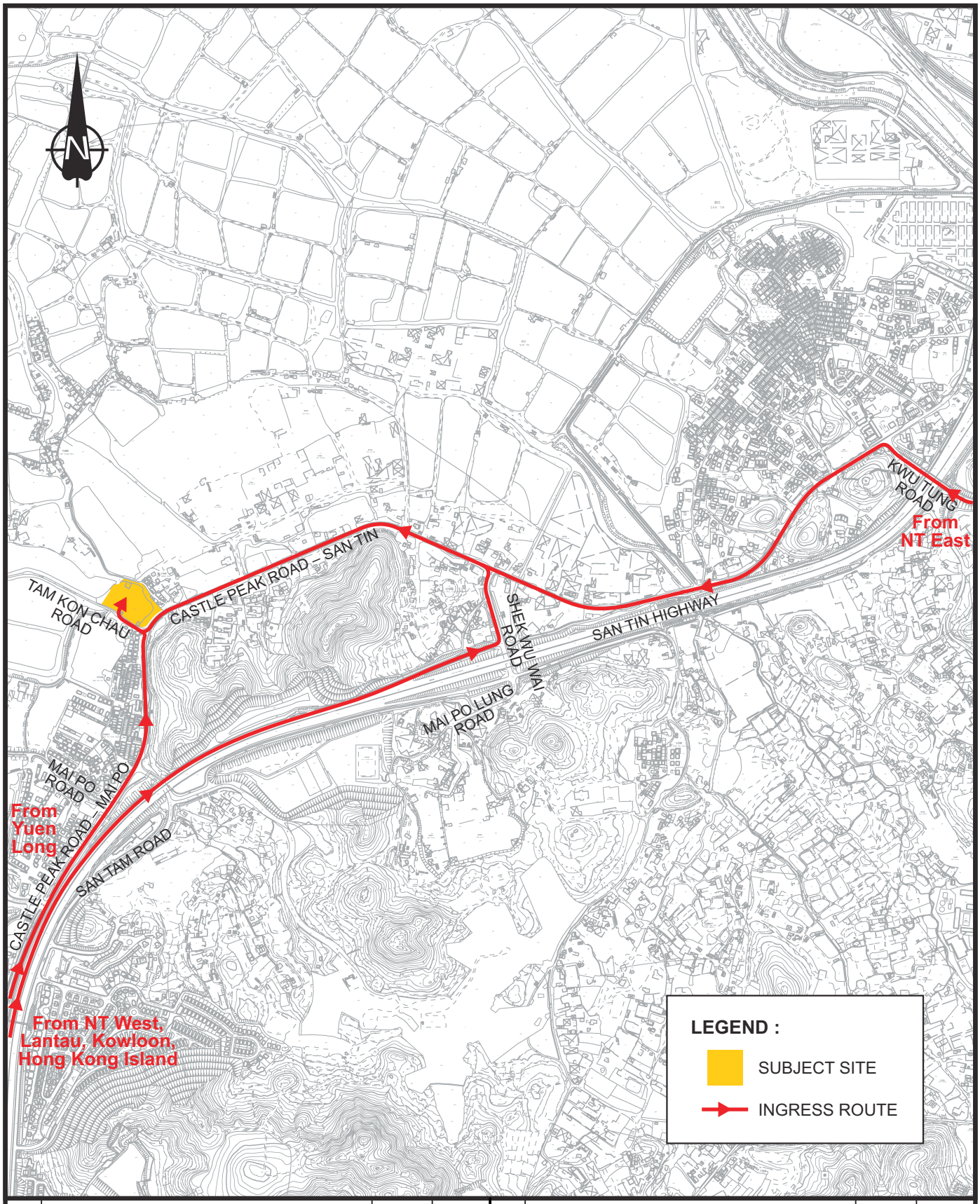


| Rev. | Description | Checked | Date | Rev. | Description | Checked | Date |
|---|---|---|---|---|---|---|---|
| - | - | - | - | - | - | - | - |
| - | - | - | - | - | - | - | - |

Project Title

TRAFFIC CONSULTANCY SERVICES FOR PROPOSED ELDERLY HOME IN LOT DD101 76 S.G. & 76 S.H. IN MAI PO, NT

Drawing Title

# DEVELOPMENT INGRESS ROUTE

| Designed | Checked | Scale | Date | Drawing No. | Rev. |
|---|---|---|---|---|---|
| CCT | JPP | NTS | AUG 2024 | 3.2 | - |

CHK50769410/TIA/F32.CDR/LLH/29AUG24

Original Size : A4

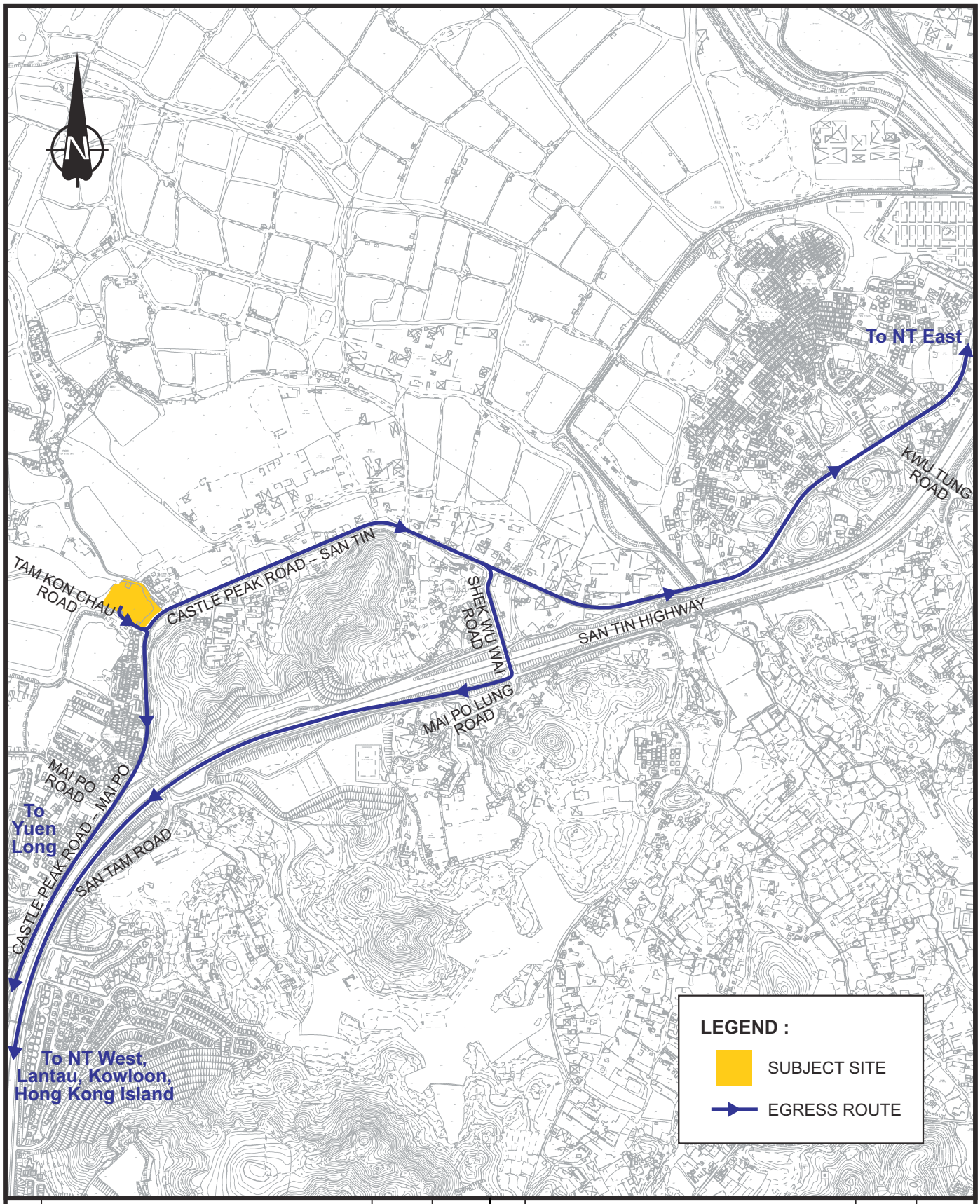


| Rev. | Description | Checked | Date | Rev. | Description | Checked | Date |
|---|---|---|---|---|---|---|---|
| - | - | - | - | - | - | - | - |
| - | - | - | - | - | - | - | - |

Project Title

TRAFFIC CONSULTANCY SERVICES FOR PROPOSED ELDERLY HOME IN LOT DD101 76 S.G. & 76 S.H. IN MAI PO, NT

Drawing Title

# DEVELOPMENT EGRESS ROUTE

| Designed | Checked | Scale | Date | Drawing No. | Rev. |
|---|---|---|---|---|---|
| CCT | JPP | NTS | AUG 2024 | 3.3 | - |

SYSTRA MVA

CHK50769410/TIA/F33.CDR/LLH/29AUG24

Original Size : A4

3.2.4 The swept path analysis for all vehicles heading to all lay-bys and loading/unloading area, and swept path for vehicles ramping up and down to the basement carpark and within the basement carpark are all provided in **Appendix B**. The swept path analysis shows that all the vehicles can manoeuvre smoothly when entering, leaving and within the site.

## 3.3 Internal Transport Facility

3.3.1 Since there is no parking standard in the latest Hong Kong Planning Standard Guideline (HKPSG) for RCHE, case study research on similar RCHE has been conducted to obtain the appropriate provision rate for internal transport facilities.

**Table 3.2 Provision of Internal Transport Facility on relevant RCHE**

| Project | Location | No. of Beds | No. of Parking | Parking rate No./bed |
|---|---|---|---|---|
| *Caritas Fung Wong Fung Ting Home, Ta Kwu Ling* | *Ta Kwu Ling* | 120 | 6 | 0.050 |
| *Fung Creek Nursing and Attention Home, Sheung Shui* | *Sheung Shui* | 232 | 8 | 0.034 |
| *Caritas Harold H. W. Lee Care and Attention Home* | *Shatin* | 276 | 6 | 0.022 |
| *Chuk Yuen Home for Aged* | *Yuen Long* | 60 | 4 | 0.067 |
| *Jockey Club Rehabilitation Complex* | *Aberdeen* | 1352 | 43 | 0.032 |
| *Wong Cho Tong Care and Attention Home* | *Ho Man Tin* | 278 | 8 | 0.029 |
| *Tai Tung Pui Hostel* | *Tuen Mun* | 121 | 8 | 0.066 |

3.3.2 Considering Jockey Club Rehabilitation Complex with similar scale as this project, a traffic survey of parking utilization has been conducted in a typical weekday during peak hour. The parking utilization rate of the Jockey Club Rehabilitation Complex is 56%.

3.3.3 A conservative rate of 0.067 parking space/bed is proposed for considering parking provisions for the subject site, and 48 private car parking spaces need to be provided. In addition, there are 6 medical consulting rooms will be proposed within the site, according to HKPSG, 1.5 car parking spaces/consulting room is required, so 9 parking spaces need to be provided. Moreover, refer to the 'Revised Recommended Outline Development Plan of San Tin Technopole' published in 2023, AFCD Wetland Conservation Park Management Office will be built on the east side of the subject site in the future, which may attract traffic or tourists. Therefore, additional 19 parking spaces as public car parking will be provided as well.

3.3.4 The proposed provisions, including Loading/Unloading bays, Non-emergency Medical Transportation Lay-by, Ambulance Lay-by, bicycle parking spaces and etc., are based on the operation needs. **Table 3.3** summaries the proposed provisions of internal transport facility of subject site.

**Table 3.3 Proposed Internal Transport Facility**

| Component | | Proposed Provision |
|---|---|---|
| No. of Car Parking Spaces | Private Car Parking (5.0m x 2.5m) for RCHE [(1)] | 48[(1)] |
| | Clinic[(2)] | 9[(2)] |
| | Public Parking | 19 |
| | Total | 76 |
| Parking for Disabilities[(3)] (5.0m x 3.5m) | | 2 |
| Taxi/ Private Car Lay-by (5.0m x 2.5m) | | 3 |
| Non-emergency Medical Transportation Lay-by (9.0m x 3.0m) | | 2 |
| Ambulance Lay-by (9.0m x 3.0m) | | 1 |
| Loading/Unloading Bays (11.0m x 3.5m) & Refuse Collection Vehicles Bays (11.0m x 3.5m) | | 2 |
| No. of Bicycle Parking Spaces[(4)] | | 20 |

Remarks:

(1) Since there is no requirement in HKPSG for parking provision for RCHE, 0.067 parking space/bed is proposed for considering parking provisions based on existing RCHE study

(2) As per HKPSG, parking provision for clinics is 1 to 1.5 car parking spaces for each consulting room.

(3) Included in the total number of car parking spaces

(4) As per Guideline of Provision of Bicycle Parking Space in Annex B of Checklist of Traffic Impact Assessment, for social welfare development, 1 bicycle parking space should be provided for every 3-4 employees. The number of staffs for the proposed development is estimated to be 79, therefore, 20-27 bicycle parking spaces should be provided.

3.3.5 **Table 3.3** suggests that the Lot DD101 76 S.G. and 76 S.H. development would provide total 76 car parking spaces, in which 2 spaces would be reserved for disabilities. Besides, 2 loading/unloading bays, 3 Taxi/Private Car Lay-bys, 2 Non-emergency Medical Transportation Lay-bys, 1 ambulance Lay-by and 20 bicycle parking spaces as ancillary transport facilities.

3.3.6 The B1 parking area mainly provides parking spaces for RCHE & clinic vehicles and vehicles visiting public car park. The parking area can be divided into two parking zones for public car park and RCHE & clinic vehicles, to ensure privacy and safety for vehicles visiting public car park and RCHE & clinic vehicles. The detailed management arrangement will be provided at later detailed design stage.

# 4. TRAFFIC FORECASTS

## 4.1 Forecasting Assumptions and Methodology

*Design Year*

4.1.1 The proposed development is anticipated to be completed by year 2028. Following the guidelines and requirements of TIA as published by Transport Department, the design year of year 2031 (i.e. 3 years upon completion year) is adopted for traffic forecast purpose.

4.1.2 To evaluate the traffic impact to the surrounding road junctions due to the Development Proposal, the Reference Scenario (with Adjacent Planned Development but without the Development Proposal) and Design Scenario (with Adjacent Planned Development and Proposed Development) have been identified for year 2031.

*Traffic Growth Rate*

4.1.3 To estimate the year 2031 reference traffic flows in the local road network, an appropriate growth factor was identified for the area. The derivation of the growth rate is determined with reference to historical growth trends and planning data, which are summarised below.

*Historical Growth Trends*

4.1.4 According to the latest Annual Traffic Census (ATC) published by Transport Department, the Average Annual Daily Traffic (AADT) of the nearby count station between Year 2019 and Year 2023 have been taken into account to establish the historical growth trend, the findings are summarised in **Table 4.1** and location of count stations are indicated in **Drawing 4.1**.

**Table 4.1 AADT of nearby ATC Traffic Counts between Years 2019 to 2023**

| Road | Station No. | Annual Average Daily Traffic (AADT) | | | | | Growth Rate (p.a.) |
|---|---|---|---|---|---|---|---|
| | | 2019 | 2020 | 2021 | 2022 | 2023 | 2023/ 2019 |
| San Tin Highway, Castle Peak Rd & San Tam Rd (Kam Tin Rd- Fairview Park Boulevard) | 5016 | 90,860 | 81,870 | 86,620 | 82,820 | 88,760 | -0.6% |
| San Tam Rd (Fairview Park Boulevard RA - End) | 5505 | 13,330 | 13,420 | 13,960 | 13,540 | 13,860 | +1.0% |
| San Tam Rd (Castle Peak Rd - Fairview Park Boulevard RA) | 5297 | 7,530 | 7,220 | 7,510 | 7,280 | 10,960 | +9.8% |
| San Tin Highway (Fairview Park Boulevard - Lok Ma Chau Rd) | 5508 | 80,460 | 82,010 | 86,000 | 82,190 | 87,340 | +2.1% |
| Castle Peak Rd - Tam Mi,Mai Po & San Tin (Fairview Park Boulevard - Lok Ma Chau Rd) | 5257 | 11,910 | 11,420 | 11,880 | 11,520 | 10,740 | -2.6% |
| Fanling Highway (Fan Kam Rd - Lok Ma Chau Rd) | 5656 | 69,560 | 66,440 | 63,880 | 61,050 | 64,880 | -1.7% |
| **Sum up** | | **273,650** | **262,380** | **269,850** | **258,400** | **276,540** | **+0.3%** |

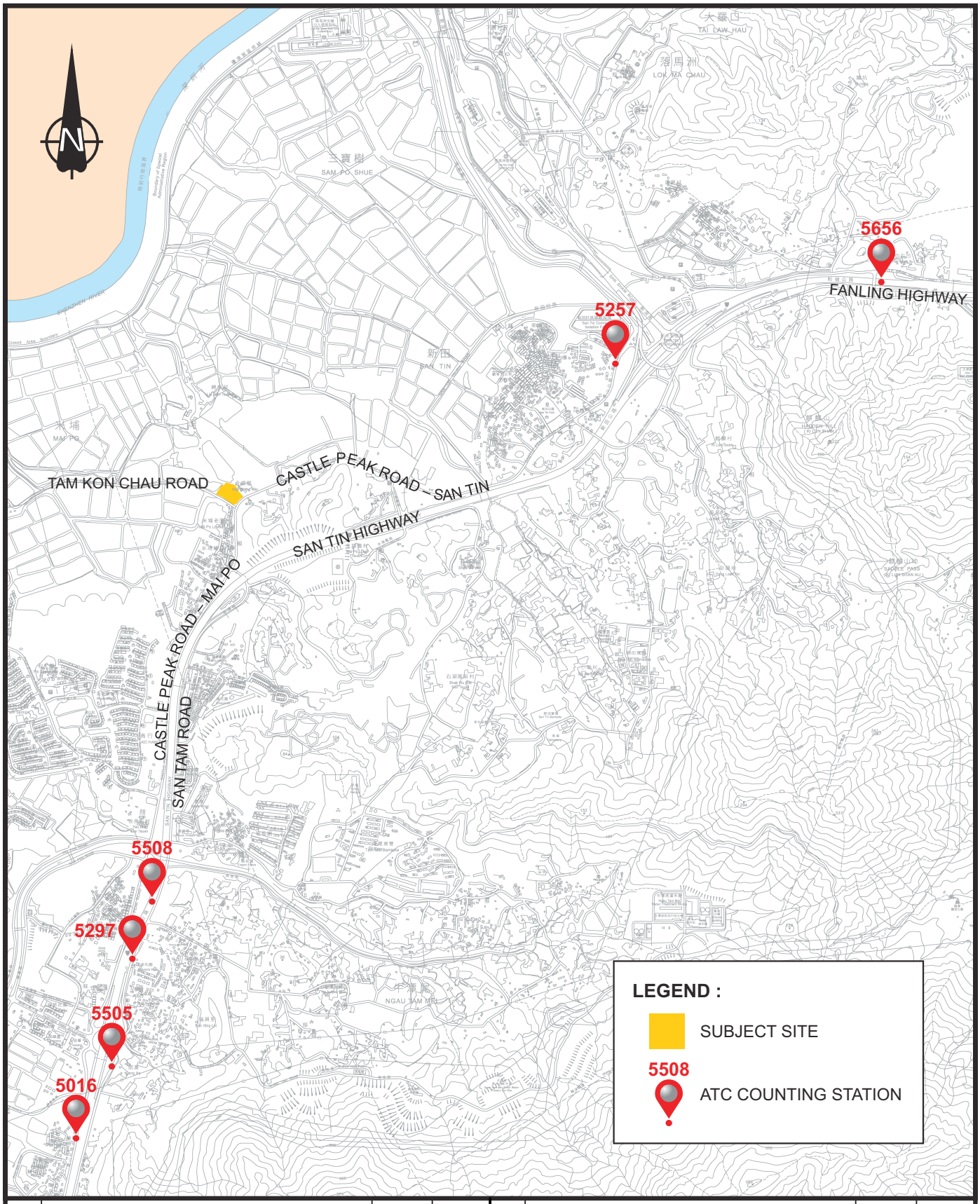


| Rev. | Description | Checked | Date | Rev. | Description | Checked | Date |
|---|---|---|---|---|---|---|---|
| - | - | - | - | - | - | - | - |
| - | - | - | - | - | - | - | - |

**Project Title**

TRAFFIC CONSULTANCY SERVICES FOR PROPOSED ELDERLY HOME IN LOT DD101 76 S.G. & 76 S.H. IN MAI PO, NT

**Drawing Title**

# LOCATION OF ATC COUNTING STATIONS IN THE VICINITY

| Designed | Checked | Scale | Date | Drawing No. | Rev. |
|---|---|---|---|---|---|
| CCT | JPP | NTS | FEB 2024 | 4.1 | - |

SYSTRA MVA

CHK50769410/TIA/F41.CDR/LLH/26FEB24

Original Size : A4

4.1.5 As showed in **Table 4.1** above, the average annual growth rate of the AADT of the nearby count stations from Year 2019 to 2023 is +0.3% per annum. Due to the effect of the COVID-19 from 2020 to 2022, the historical traffic data did not effectively represent the actual traffic growth. In addition, the strategic development like San Tin Technopole will attract more district-wide traffic volumes to the vicinity. Therefore, the growth rate form ATC is not appropriate to be adopted in this traffic forecast due to the two reasons mentioned above.

*Projected Population data (From The Census and Statistics Department (C&SD)*

4.1.6 According to the Census and Statistics Department (C&SD), the Hong Kong resident population will increase to 7.8 million in 2031, and the average growth rate from years 2024 to 2031 is +0.548%. The Hong Kong Resident Population between Year 2024 and Year 2031 are summarised in **Table 4.2**.

**Table 4.2 Hong Kong Resident Population between Year 2024 and Year 2031**

| Year | Hong Kong Resident Population |
|---|---|
| 2024 | 7,526,800 |
| 2025 | 7,559,800 |
| 2026 | 7,596,800 |
| 2027 | 7,638,700 |
| 2028 | 7,684,500 |
| 2029 | 7,731,100 |
| 2030 | 7,777,100 |
| 2031 | 7,820,200 |
| **Annual Growth Rate (p.a.) – 2031/2024** | **+0.548%** |

4.1.7 The location of the subject site is in the underdeveloped area of Northwest New Territories, the overall population growth rate of Hong Kong may not reflect the actual situation of population growth in this area. Therefore, narrowing the research scope of growth rate to Yuen Long District will have more reference value.

*Planning Data (From Working Group on Population Distribution Projections (WGPD)*

4.1.8 Based on the Projected Population by Tertiary Planning Unit(TPU) from WGPD, the population of TPU where the proposed development located in has been projected with the average growth rate of 0.93% from 2021 to 2027. The detail of average annual growth rate from years 2021 to 2027 is illustrated in **Table 4.3**.

**Table 4.3 Projected Population by Tertiary Planning Unit (TPU), 2021-2027**

| TPU | Population | | Growth Rate (p.a.) |
|---|---|---|---|
| | 2021 | 2027 | 2021-2027 |
| 542 | 12,500 | 11,700 | -1.10% |
| 543&546 | 3,300 | 5,000 | 7.17% |
| **Sum up** | **15,800** | **16,700** | **0.93%** |

4.1.9 Considering the substantial planned development and population/employment growth in the northern New Territories, a conservative estimation of +1.0% per annum is adopted, to produce the year 2031 traffic forecasts from the 2024 observed traffic flows.

*San Tin Technopole*

4.1.10 The large-scale development of San Tin Technopole (STT) will be constructed, and the first population intake will be in 2031. The summary of development phase will be as shown in **Table 4.4**.

**Table 4.4 Phasing of San Tin Technopole**

| Phases[1] | Proposed Commencement of Works | Proposed Intake Year |
|---|---|---|
| Initial Phase | Year 2024 | Year 2031 |
| Main Phase | Year 2026 | Year 2034 |
| Remaining Phase | Year 2032 | Year 2039 |

Remark: (1) Source from EIA study of First Phase Development of the New Territories North – San Tin / Lok Ma Chau Development Node - Investigation.

4.1.11 The development trips in "Initial Phase" would be considered in the assessment of Year 2031. The related development schedules and estimated traffic generations are summarized in below **Table 4.5**.

**Table 4.5 Development Trips of San Tin Technopole Adopted in Assessment**

| Ref.[1] | Development Schedule | Parameters | Trip Generations (pcu/hr) | | | |
|---|---|---|---|---|---|---|
| | | | AM Peak | | PM Peak | |
| | | | Gen | Att | Gen | Att |
| San Tin Technopole (Initial Phase) | Information and Technology (I&T) Section | (Approximate 29,821 $m^2$) | 305[2] | 439[2] | 282[2] | 211[2] |
| | Logistics & Storage and Workshop | (Approximate 17,380 $m^2$) | 33[3] | 49[3] | 47[3] | 37[3] |
| | Public Housing | Approximate 6,653 units (Average house/flat size of about 50 $m^2$) | 415[4] | 285[4] | 198[4] | 267[4] |
| | Private Housing | Approximate 5,173 units (Average house/flat size of about 60 $m^2$) | 372[5] | 220[5] | 148[5] | 192[5] |

Remark:
(1) Source from EIA study of First Phase Development of the New Territories North – San Tin / Lok Ma Chau Development Node - Investigation.
(2) Based on site area measurement, plot ratio of 6 in RODP, and traffic generation and attraction rates for office building in TPDM.
(3) Based on site area measurement, plot ratio of 2 in RODP, and traffic generation and attraction rates for industrial building in TPDM.
(4) Based on site area measurement, plot ratio of 6.5 in RODP, assumed average flat size of 50 $m^2$, consideration of new flat units about 50,000-54,000 in TPB land use proposal, and traffic generation and attraction rates for subsidised housing: HOS/PSPS in TPDM.
(5) Based on site area measurement, plot ratio of 6 in RODP, assumed average flat size of 60 $m^2$, consideration of new flat units about 50,000 - 54,000 in TPB land use proposal, and traffic generation and attraction rates for private housing: high-density/R(A) in TPDM.

*Other Nearby Planned Developments*

4.1.12 The planned and committed developments in subjected study area, as listed in **Table 4.6**, which would have traffic contribution to the road network in the vicinity, have been considered in the traffic forecast for the year 2031. The peak hour traffic trips of each developments are also summarised in **Table 4.6**.

**Table 4.6 Estimated Trip Generations of Adjacent Planned Developments**

| Ref. | Development | Type | Peak Hour Traffic Trip (pcu/hr) | | | |
|---|---|---|---|---|---|---|
| | | | AM Peak | | PM Peak | |
| | | | Gen | Att | Gen | Att |
| 1. | A/ YL-MP/ 291 | - 789 houses(1) | 149 | 75 | 69 | 96 |
| 2. | A/YL-MP/205 | - 71 units (average flat size of about 186 $m^2$)(1) | 20 | 13 | 12 | 17 |
| 3. | A/YL-MP/287 | - 65 units (average flat size of about 116 $m^2$)(1) | 15 | 8 | 7 | 10 |
| 4. | Y/YL-NTM/9 | - 5,400 m2 GFA Elderly Care Home 142 Beds (2) | 10(3) | 10(3) | 10(3) | 10(3) |
| 5. | Y/YL-NTM/7 & Y/YL-NTM/8 | - 1,228 units (Average Flat Size 43 $m^2$)<br>- 1,249 units (Average Flat Size 44 $m^2$)<br>- Retail: 831$m^2$<br>- PTI<br>- Kindergarten (6 Classrooms) | 243(4) | 171(4) | 106(4) | 127(4) |

Remarks:

(1) As extracted from newspaper articles / online information.
(2) As extracted from the latest approved planning application.
(3) Assume Nominal Trips of 10 pcu/hr.
(4) Trips generation from project's TIA report.

## 4.2 Forecasting Scenarios

4.2.1 The derived peak hour traffic trips of the subject site would be assigned onto the local road network in accordance with the observed traffic circulation pattern. The distributions of the peak hour development traffic trips are shown in **Drawing 4.2**.

*The proposed development Traffic Trips*

4.2.2 According to the latest T.P.D.M., due to the absence of trip rate specific for RCHE, case studies and manual survey of RCHE with similar scale were conducted, to better understand the traffic generation and attraction of RCHE. Detailed data can be found in **Table 4.7**. The tabulated data reveals that TWGHs Wong Cho Tong Social Service Building in Ho Man Tin exhibits a higher trip rate per bed. Therefore, adopting a conservative analytical approach, the trip rate of TWGHs Wong Cho Tong Social Service Building was adopted as the foundation for this traffic forecasting of the proposed development. The traffic trip of proposed development would be estimated in **Table 4.8**.

**Table 4.7 Traffic Trips of Similar RCHE Survey**

| Ref | Development | Item | AM | | | PM | | |
|---|---|---|---|---|---|---|---|---|
| | | | Att | Gen | 2-WAY | Att | Gen | 2-WAY |
| 1 | Fung Creek Nursing and Attention Home, Sheung Shui | Trips (pcu/hr) | 9 | 4.5 | 13.5 | 2 | 3 | 5 |
| | | No. of beds | 232 | | | | | |
| | | Trip rates (pcu/hr/bed) | 0.0388 | 0.0194 | 0.0582 | 0.0086 | 0.0129 | 0.0216 |
| 2 | Caritas Harold H.W. Lee Care and Attention Home, Sha Tin | Trips (pcu/hr) | 13 | 10 | 23 | 2 | 3 | 5 |
| | | No. of beds | 276 | | | | | |
| | | Trip rates (pcu/hr/bed) | 0.0471 | 0.0362 | 0.0833 | 0.0072 | 0.0109 | 0.0181 |
| 3 | Jocky Club Rehabilitation Complex | Trips (pcu/hr) | 22 | 23 | 45 | 10 | 9 | 19 |
| | | No. of beds | 1,352 | | | | | |
| | | Trip rates (pcu/hr/bed) | 0.0162 | 0.0170 | 0.0032 | 0.0074 | 0.0067 | 0.0141 |
| 4 | TWGHs Wong Cho Tong Social Service Building | Trips (pcu/hr) | 19 | 24 | 43 | 16 | 12 | 28 |
| | | No. of consulting room | 278 | | | | | |
| | | Trip rates (pcu/hr/room) | 0.0683 | 0.0863 | 0.1547 | 0.0576 | 0.0432 | 0.1007 |

**Table 4.8 Estimated Traffic Trips for Proposed Development**

| Ref | Development | Item | AM | | | PM | | |
|---|---|---|---|---|---|---|---|---|
| | | | Att | Gen | 2-WAY | Att | Gen | 2-WAY |
| 1 | **Lot DD101 76 S.G. & 76 S.H.** | **Trips (pcu/hr)** | **49** | **62** | **111** | **42** | **31** | **73** |
| | | **No. of beds** | **716** | | | | | |

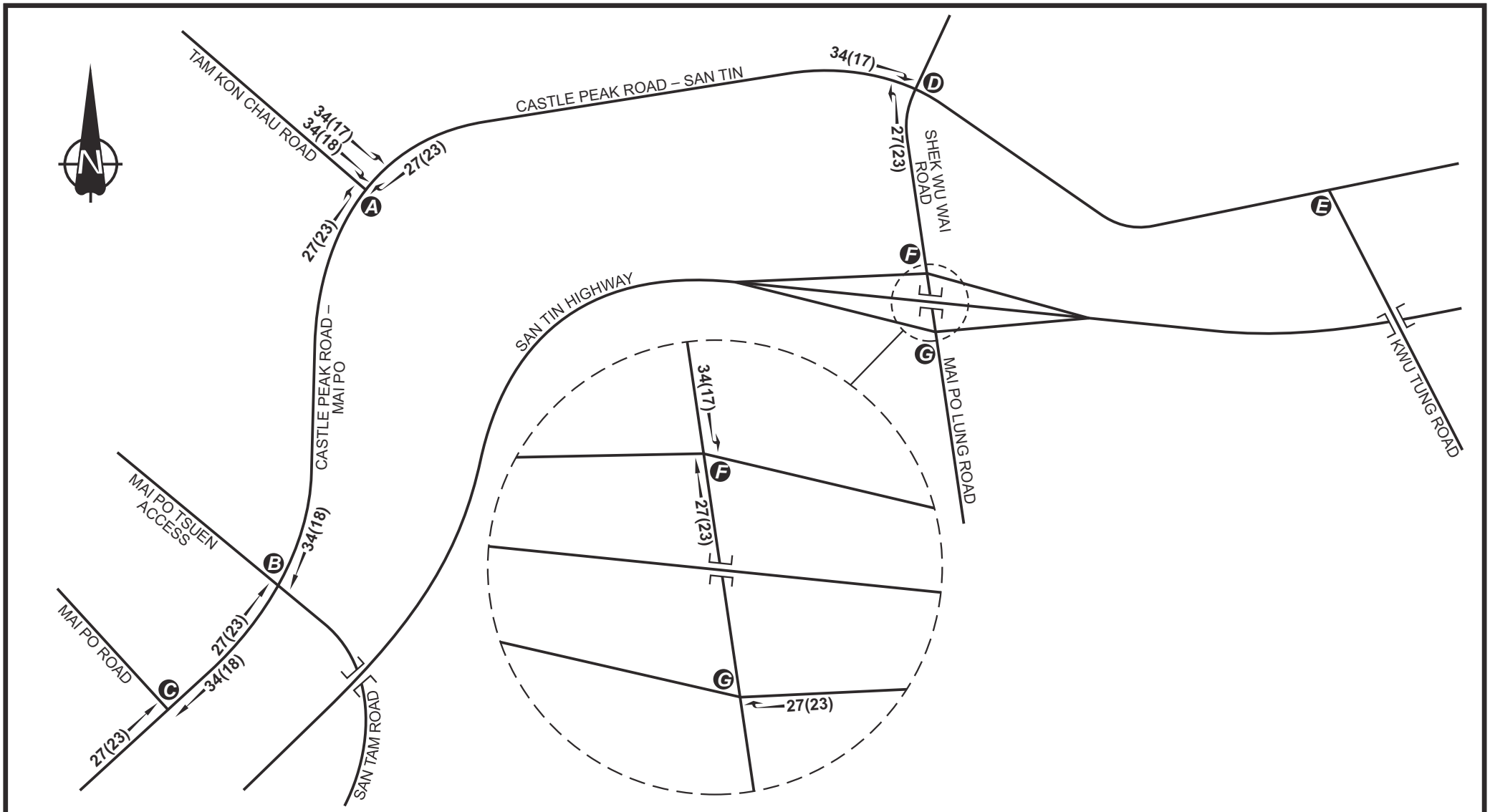


| Rev. | Description | Checked | Date | Rev. | Description | Checked | Date | Rev. | Description | Checked | Date |
|---|---|---|---|---|---|---|---|---|---|---|---|
| A | TD'S COMMENTS INCORPORATED | JPP | 18JUL25 | - | - | - | - | - | - | - | - |

**Project Title**

TRAFFIC CONSULTANCY SERVICES FOR
PROPOSED ELDERLY HOME IN
LOT DD101 76 S.G. & 76 S.H. IN MAI PO, NT

**Drawing Title**

# DEVELOPMENT TRAFFIC FLOWS

| Designed | Checked | Scale | Date | Drawing No. | Rev. |
|---|---|---|---|---|---|
| CCT | JPP | NTS | AUG 2024 | 4.2 | A |

SYSTRA MVA

CHK50769410/TIA/F42-A.CDR/LLH/18JUL25

Original Size : A4

| Ref | Development | Item | AM | | | PM | | |
|---|---|---|---|---|---|---|---|---|
| | | | Att | Gen | 2-WAY | Att | Gen | 2-WAY |
| | | **Trip rates[1] (pcu/hr/bed)** | **0.0683** | **0.0863** | **0.1547** | **0.0576** | **0.0432** | **0.1007** |
| 2 | **Clinic** | Trips (pcu/hr) | **2** | **2** | **3** | **1** | **2** | **11** |
| | | No. of consulting room | 6 | | | | | |
| | | Trip rates[2] (pcu/hr/room) | **0.292** | **0.208** | **0.500** | **0.167** | **0.250** | **1.670** |
| 3 | **Public Car Park** | Trips (pcu/hr) | **3** | **4** | **7** | **3** | **2** | **5** |
| | | No. of parking space | 19 | | | | | |
| | | Trip rates[3] (pcu/hr/car) | **0.143** | **0.1785** | **0.321** | **0.1305** | **0.1005** | **0.231** |
| **Total** | | | **54** | **68** | **122** | **46** | **35** | **81** |

Remarks:

(1) With reference to trip rate of TWGHs Wong Cho Tong Social Service Building, the higher reference trip rate will be adopted.

(2) Adopted trip rate refers to the surveyed trip rate of the Clinic of Jocky Club Rehabilitation Complex in Aberdeen during the peak hour of a normal weekday.

(3) Adopted trip rate refers to the surveyed trip rate of a similar public car park in Jumbo Court during the peak hour of a normal weekday ,with an additional factor of 1.5.

4.2.3 The proposed RCHE in subject site would generate a two-way total of 111 pcu/hr and 73 pcu/hr in the AM and PM peak respectively in year 2031.

4.2.4 The annual traffic growth rate and the adjacent planned developments as discussed in **Section 4.1** would be considered to produce the year 2031 reference traffic flows during the typical weekday morning and evening peak hours of the local road network.

4.2.5 The traffic trips of the proposed RCHE in subjected site would be superimposed onto the reference traffic flows to produce the anticipated year 2031 peak hour traffic flows for design scenarios.

4.2.6 The general formulae of the forecasting scenarios of year 2031 are as follows:

**Reference Traffic Flows** = 2024 Observed Traffic Flow x Adopted Growth Rate + Traffic Flow of Adjacent Planned Developments

**Design Traffic Flows** = Year 2031 Reference Traffic Flows + Traffic Trips for Proposed Development

4.2.7 The reference traffic flows and design traffic flows in year 2031 as shown in **Drawings 4.3** and **Drawing 4.4** respectively.

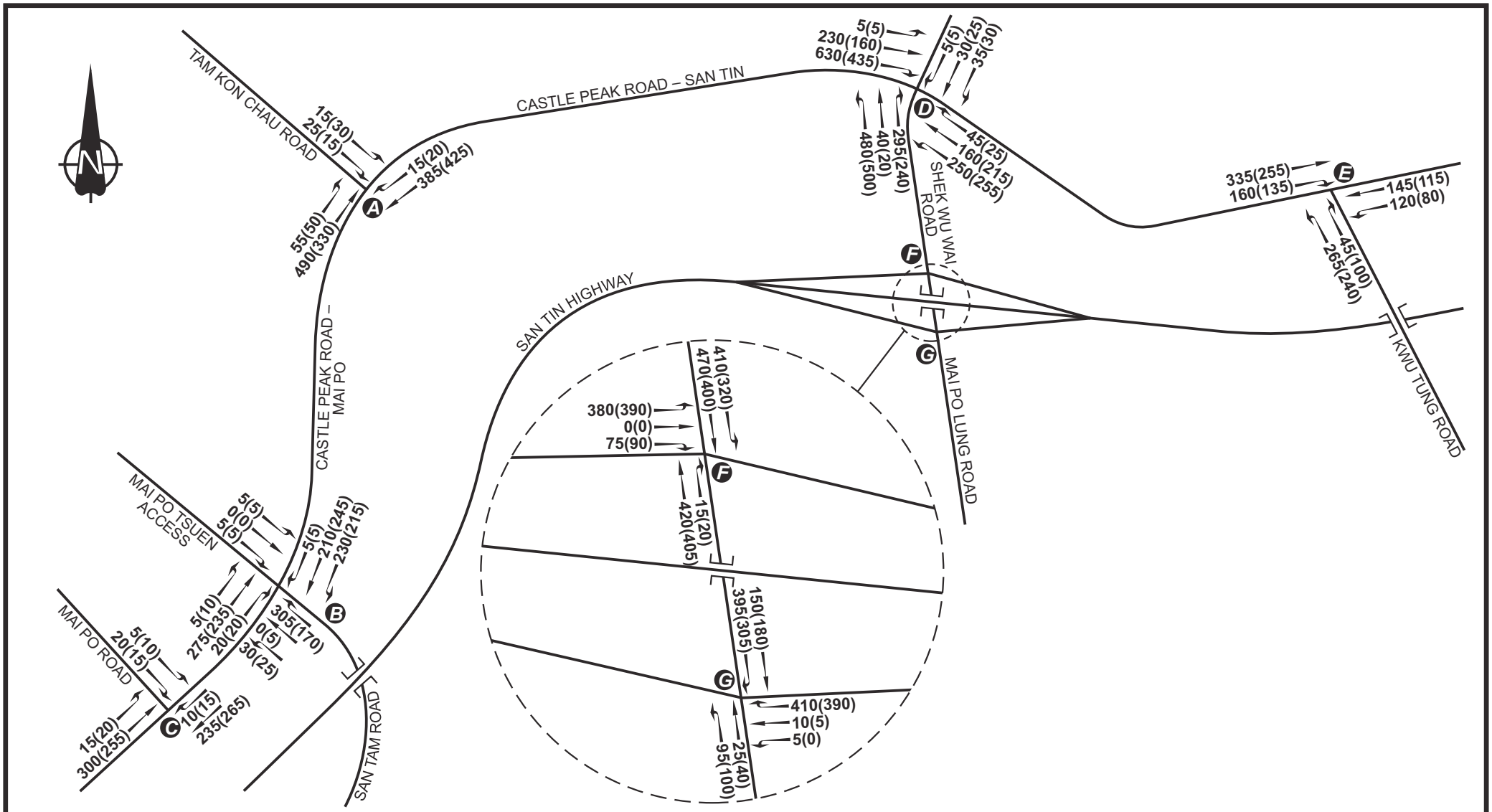


| A | TD'S COMMENTS INCORPORATED | JPP | 18JUL25 | - | - | - | - | - | - | - | - |
|---|---|---|---|---|---|---|---|---|---|---|---|
| Rev. | Description | Checked | Date | Rev. | Description | Checked | Date | Rev. | Description | Checked | Date |

**Project Title**

TRAFFIC CONSULTANCY SERVICES FOR
PROPOSED ELDERLY HOME IN
LOT DD101 76 S.G. & 76 S.H. IN MAI PO, NT

**Drawing Title**

# YEAR 2031 REFERENCE TRAFFIC FLOWS

| Designed | Checked | Scale | Date | Drawing No. | Rev. |
|---|---|---|---|---|---|
| CCT | JPP | NTS | AUG 2024 | 4.3 | A |

SYSTRA MVA

CHK50769410/TIA/F44-A.CDR/LLH/18JUL25

Original Size : A4

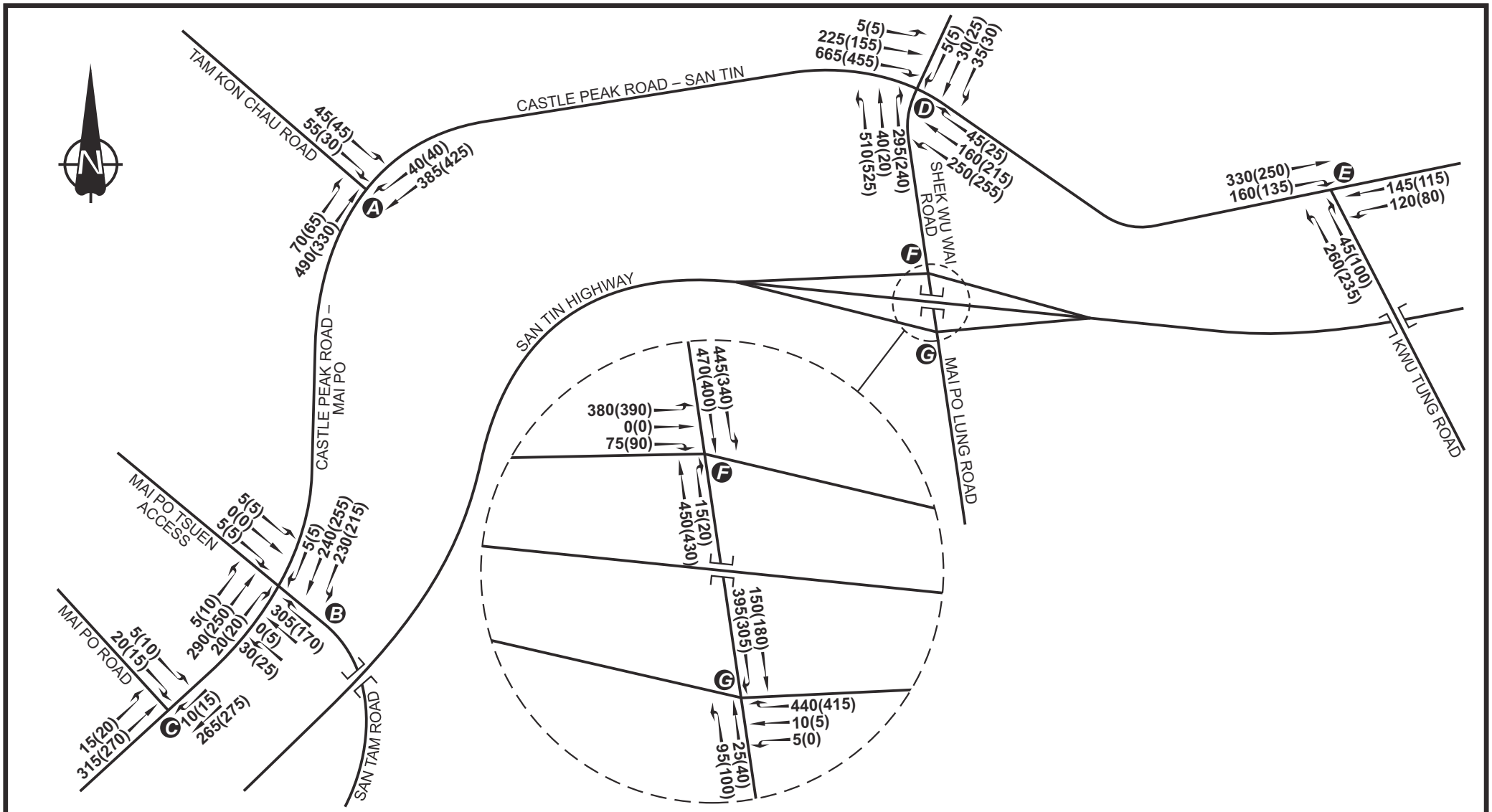


| - | - | - | - | - | - | - | - | - | - | - | - |
|---|---|---|---|---|---|---|---|---|---|---|---|
| Rev. | Description | Checked | Date | Rev. | Description | Checked | Date | Rev. | Description | Checked | Date |

**Project Title**

TRAFFIC CONSULTANCY SERVICES FOR
PROPOSED ELDERLY HOME IN
LOT DD101 76 S.G. & 76 S.H. IN MAI PO, NT

**Drawing Title**

# YEAR 2031 DESIGN TRAFFIC FLOWS

| Designed | Checked | Scale | Date | Drawing No. | Rev. |
|---|---|---|---|---|---|
| CCT | JPP | NTS | JUL 2025 | 4.4 | - |

SYSTRA MVA

CHK50769410/TIA/F45.CDR/LLH/18JUL25

Original Size : A4

# 5. TRAFFIC IMPACT ASSESSMENT

## 5.1 Junction Operational Performance

5.1.1 The identified seven key local junctions would be assessed in accordance with the anticipated year 2031 traffic flows for both reference and design scenarios in order to investigate the traffic impact of the proposed RCHE development with respect to the background situation.

5.1.2 The junction assessments are based on the existing layouts and arrangements of the respective junctions, and the layouts of Junction D, Junction F and Junction G in anticipated year 2031 refers to STT gazette documents, the planned layouts of junction D, F and G as shown in **Drawing 5.1 and 5.2**. The assessment results of year 2031 traffic flows for both reference and design scenarios are summarised in **Table 5.1**. The junction calculation sheets are attached in **Appendix A**.

**Table 5.1 Junction Operational Performance in Year 2031**

| Ref. (1) | Junction | RC/RFC (2) | | | |
|---|---|---|---|---|---|
| | | Reference | | Design | |
| | | AM Peak | PM Peak | AM Peak | PM Peak |
| A | Castle Peak Road / TAM Kon Chau Road | 0.22 | 0.24 | 0.26 | 0.25 |
| B | Castle Peak Road / San Tam Road | 0.78 | 0.46 | 0.80 | 0.46 |
| C | Castle Peak Road / Mai Po Road | 0.13 | 0.15 | 0.15 | 0.16 |
| D | Castle Peak Road / Shek Wu Wai Road | 62% | 90% | 56% | 89% |
| E | Castle Peak Road / Kwu Tung Road | 0.39 | 0.35 | 0.39 | 0.34 |
| F | Shek Wu Wai Road / San Tin Highway Slip Road | >100% | >100% | >100% | >100% |
| G | Mai Po Lung Road / Shek Wu Wai Road | | | | |

Remarks:
(1) Refer to **Drawing 2.2;**
(2) The operational performance of a signal junction is represented in Reserve Capacity (RC), which is defined as overloaded while the RC is less than 0%, The operational performance of a priority/roundabout is represented in Ratio to Flow Capacity (RFC), which is defined as overloaded if RFC over 1.00.

5.1.3 The findings presented in **Table 5.1** demonstrate that all the key junctions will operate with sufficient traffic capacity in reference and design scenario in year 2031.

## 5.2 Link Assessment

5.2.1 Tam Kon Chau Road is a single track access road, with a road width of 3.2m. Tam Kon Chau Road also is a prohibited zone 24 hours daily for all motor vehicles exceeding 10 metres in length.

5.2.2 Therefore, apart from junction capacity assessment, road link assessment for Tam Kon Chau Road is also carried out. Performance of the Tam Kon Chau Road is assessed in terms of traffic volume / capacity (V/C) ratio and the results are presented in **Table 5.2**.

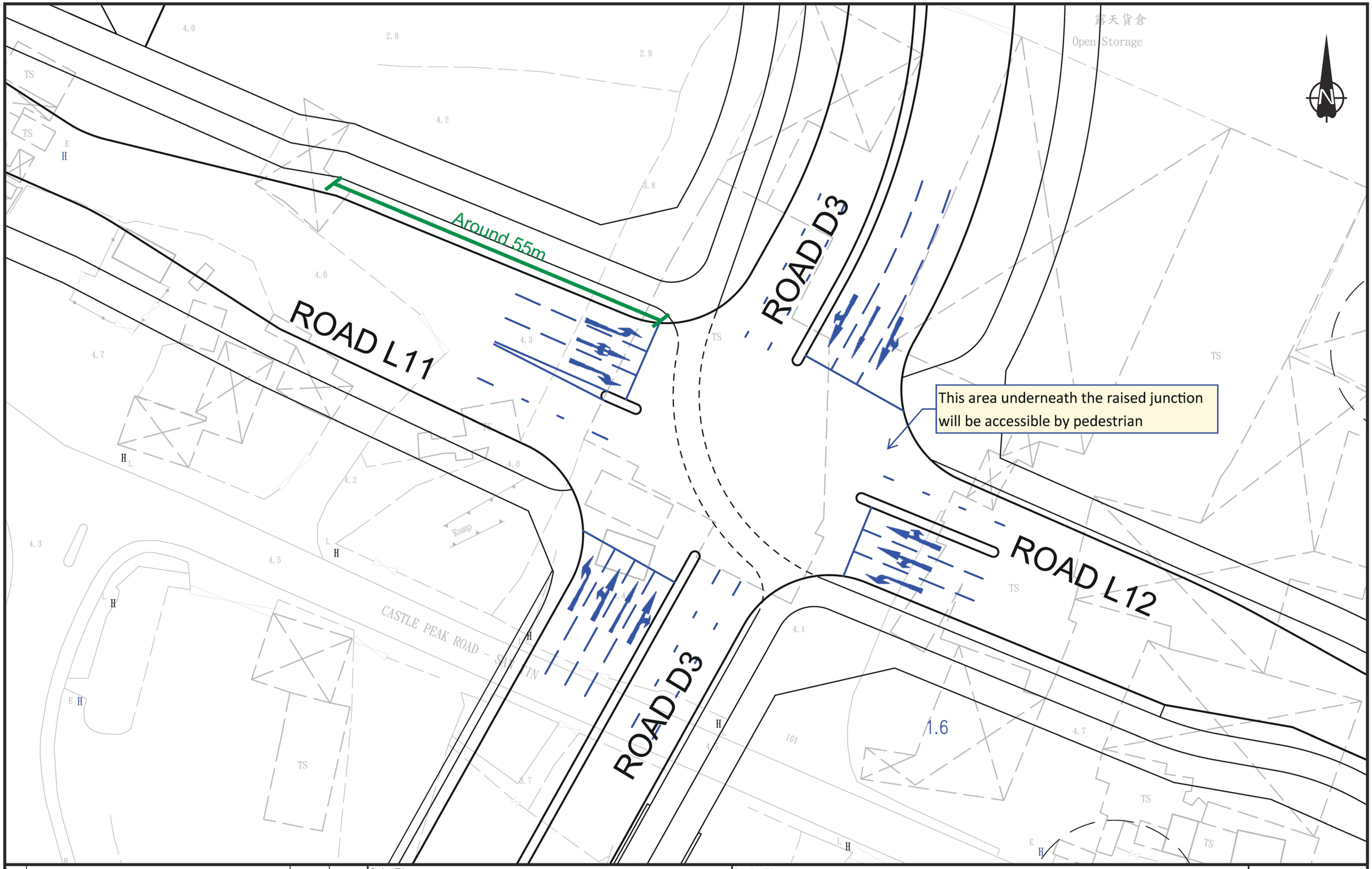


| Rev. | Description | Checked | Date |
|---|---|---|---|
| - | - | - | - |
| - | - | - | - |
| - | - | - | - |
| A | TD'S COMMENTS INCORPORATED | JPP | 1AUG25 |

Project Title

TRAFFIC CONSULTANCY SERVICES FOR
PROPOSED ELDERLY HOME IN
LOT DD101 76 S.G. & 76 S.H. IN MAI PO, NT

Drawing Title

**PLANNED JUNCTION LAYOUT OF SHEK WU WAI ROAD / ROAD D3 / ROAD L11 / ROAD L12 (D)**

| Designed | Checked | Scale | Date | Drawing No. | Rev. |
|---|---|---|---|---|---|
| CCT | JPP | NTS | MAR 2024 | 5.1 | A |

SYSTRA MVA

CHK50769410/TIA/F51-A.CDR/LLH/1AUG25

Original Size : A3

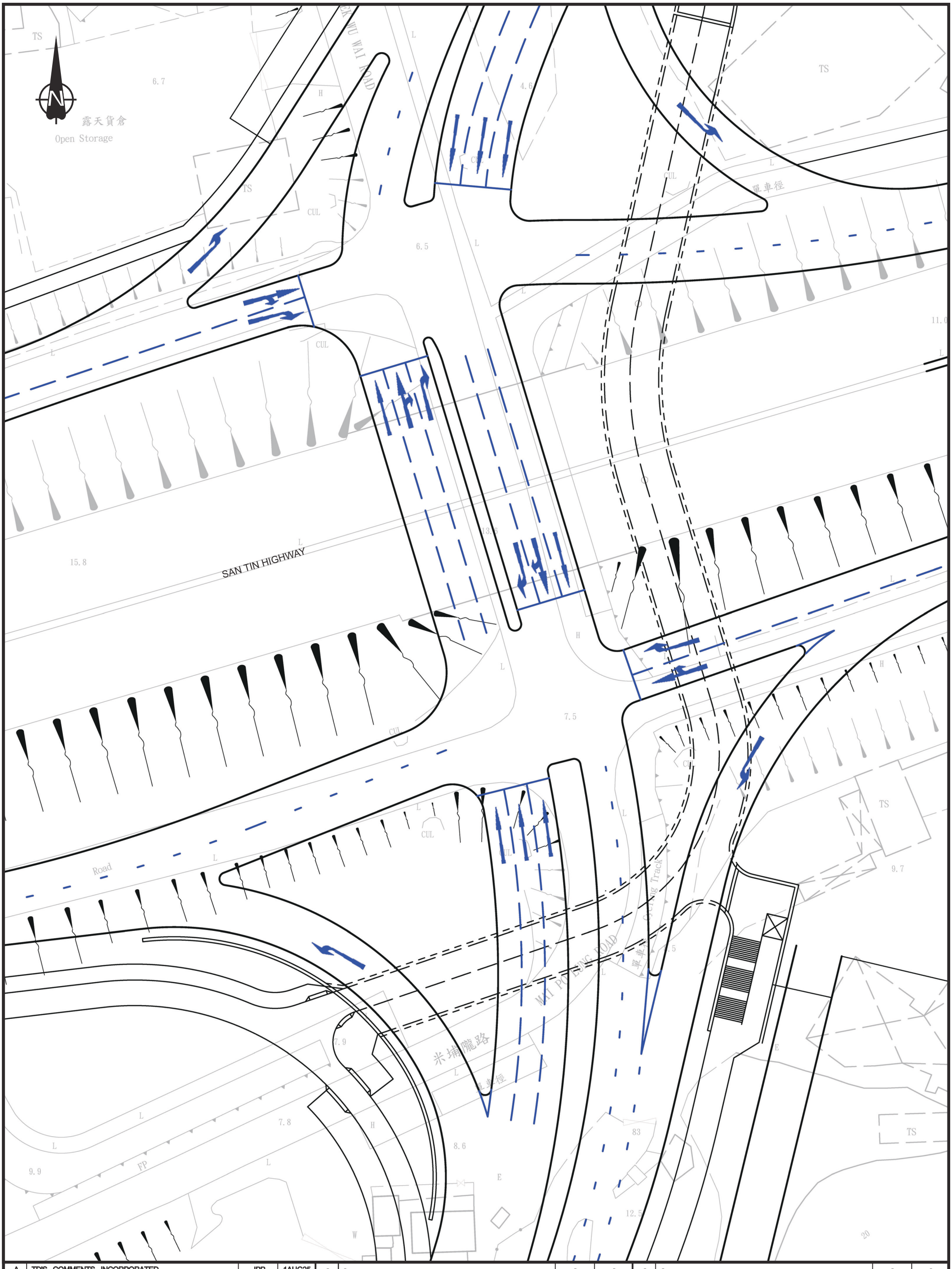


| Rev. | Description | Checked | Date | Rev. | Description | Checked | Date | Rev. | Description | Checked | Date |
|---|---|---|---|---|---|---|---|---|---|---|---|
| A | TD'S COMMENTS INCORPORATED | JPP | 1AUG25 | - | - | - | - | - | - | - | - |

Project Title

TRAFFIC CONSULTANCY SERVICES FOR
PROPOSED ELDERLY HOME IN
LOT DD101 76 S.G. & 76 S.H. IN MAI PO, NT

Drawing Title

# PLANNED JUNCTION LAYOUT OF SHEK WU WAI ROAD / SAN TIN HIGHWAY SLIP ROAD (F)

| Designed | Checked | Scale | Date | Drawing No. | Rev. |
|---|---|---|---|---|---|
| CCT | JPP | NTS | AUG 2024 | 5.2 | A |

SYSTRA MVA

CHK50769410/TIA/F52-A.CDR/LLH/1AUG25

Original Size : A3

**Table 5.2 Tam Kon Chau Road Assessment in Year 2024 and Year 2031 Design Case**

| Road | Direction | Capacity (pcu/hr) | 2024 Observed Flow V/C Ratio | | 2031 Design Case V/C Ratio | |
|---|---|---|---|---|---|---|
| | | | AM | PM | AM | PM |
| Tam Kon Chau Road | 2-way | 120(1) | 0.57 | 0.65 | 1.70 | 1.41 |

Remarks:

(1) By TPDM Volume 2 Chapter 3 Section 3.11.3, the design flow of a single track road is recommended to be taken as 100 veh/hr for 2-way traffic, approximately 120 pcu/hr for 2-way traffic.

5.2.3 The table above indicates that Tam Kon Chau Road is operating within capacity at present, but will be over its capacity in the year 2031 Design case. Therefore, it is suggested that Tam Kon Chau Road needs to be widen, the details of proposed road widening scheme as shown in **Drawing 5.3**. With the proposed improvement, Tam Kon Chau Road will operate with adequate capacity. **Table 5.3** shows the link performance in year 2031 design case.

**Table 5.3 Tam Kon Chau Road Assessment in Year 2031 Design Case**

| Road | Direction | Capacity (pcu/hr) | 2031 Design Case V/C Ratio | |
|---|---|---|---|---|
| | | | AM | PM |
| Tam Kon Chau Road (widened road section) | Northbound | 490(1) | 0.22 | 0.21 |
| | Southbound | 490(1) | 0.20 | 0.14 |
| Tam Kon Chau Road (after passing widened road section) | 2-way | 120(2) | 0.68 | 0.73 |

Remarks:

(1) By TPDM Volume 2 Chapter 2 Section 2.4.1, the design flow of a 2-lane single carriageway for local roads will be taken as 800 veh/hr for 2-way traffic, approximately 980 pcu/hr for 2-way traffic. Each direction has half of the capacity.

(2) By TPDM Volume 2 Chapter 3 Section 3.11.3, the design flow of a single track road is recommended to be taken as 100 veh/hr for 2-way traffic, approximately 120 pcu/hr for 2-way traffic.

## 5.3 Traffic Queue Assessment

5.3.1 In the proposed planning scheme, the vehicular access is about 30m away from the junction of Castle Peak Road – San Tin and Tam Kon Chau Road, which can accommodate about 6 vehicles for waiting. In **Table 4.8**, which reveals that the proposed development will attract a maximum of 68 vehicles during AM peak. Since the drop-bar gate will not be provided at the vehicular access, the time it takes for each vehicle to enter the site can be assumed as minimal.

5.3.2 The vehicle queuing assessment during an incident is calculated as follows:

| | |
|---|---|
| Number of lanes | N=1 |
| Average Arrival Rate Per Hour (λ) | λ=68 veh/hr (68 veh/hr worst AM peak attraction, detail refer to **Table 4.8**) |
| Assumed Entering Time per car in an incident | 45 seconds |
| Average Service Rate (μ) | μ=3,600/45= 80 veh/hr |

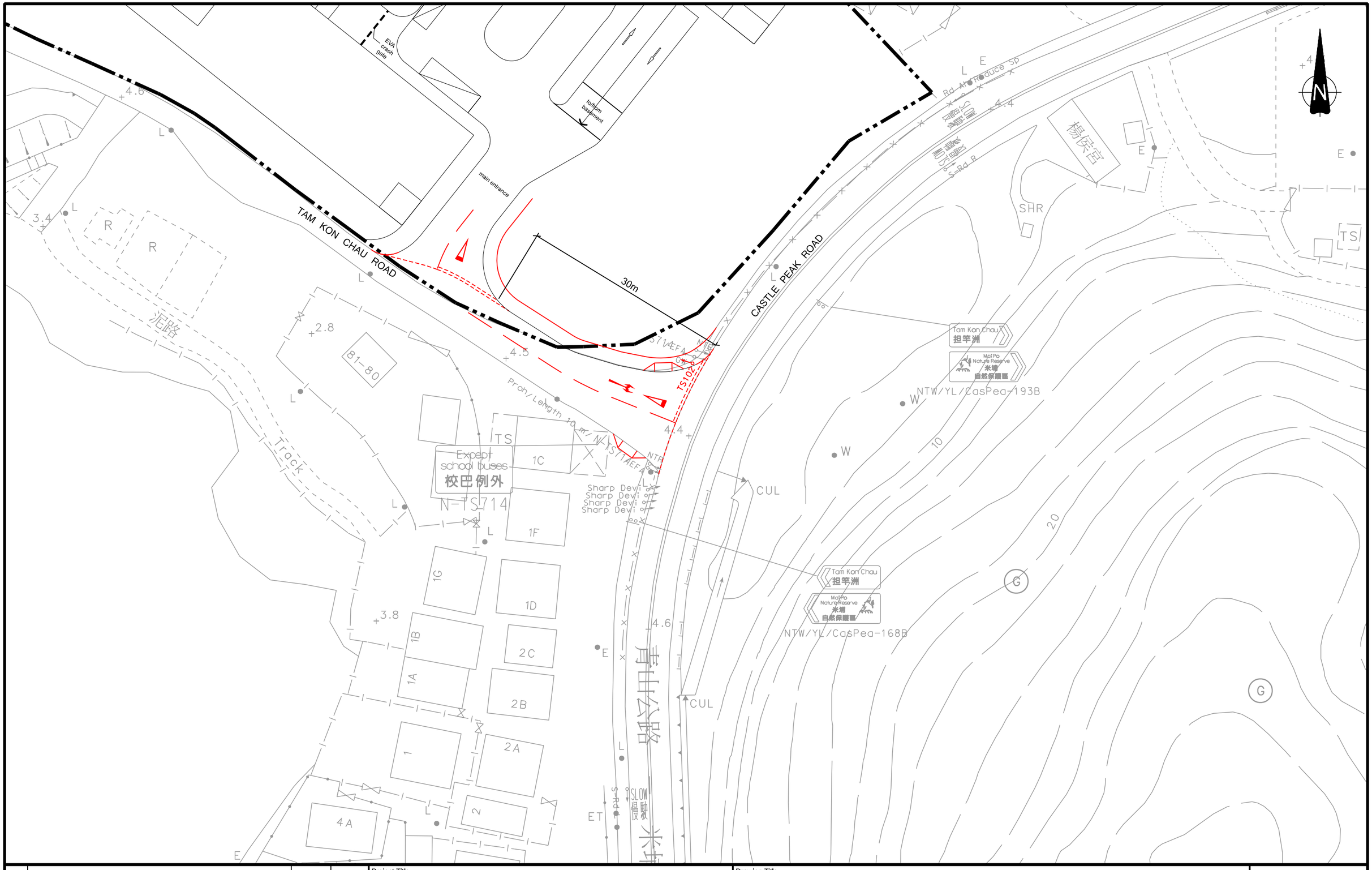


| Rev. | Description | Checked | Date |
|---|---|---|---|
| - | - | - | - |
| - | - | - | - |
| - | - | - | - |
| - | - | - | - |

Project Title

TRAFFIC CONSULTANCY SERVICES FOR
PROPOSED ELDERLY HOME IN
LOT DD101 76 S.G. & 76 S.H. IN
MAI PO. NT

Drawing Title

# SUGGESTED ROAD WIDENING SCHEME BETWEEN THE SITE ACCESS AND THE JUNCTION OF CASTLE PEAK ROAD / TAM KON CHAU ROAD (A)

| Designed | Checked | Scale | Date | Drawing No. | Rev. |
|---|---|---|---|---|---|
| CCT | JPP | 1:500(A3) | MAY 2025 | 5.3 | - |

SYSTRA MVA

CHK50769410/TIA/F53.DGN/LHO/26MAY25

Original Size : A3

P= Average Arrival Rate Per Hour (λ) / Average Service Rate (μ) = 0.850

5.3.3 The vehicle queuing analysis is calculated with reference to Principles of Highway Engineering and Traffic Analysis by Fred L. Mannering and Walter P. Kilareski. The results of the vehicle queuing analysis are summarized in **Table 5.4**.

**Table 5.4 Vehicle Queuing Analysis**

| Number of Vehicles Waiting (n) | Probability of Number of Vehicles Waiting p(n) | Accumulative Probability of More Than n Vehicles waiting p(≤n) |
|---|---|---|
| (a) n=0 | 0.427 | 0.427 |
| (b) n=1 | 0.363 | 0.791 |
| (c) n=2 | 0.154 | 0.945 |
| (d) n≥3 | 1-(a)-(b)-(c)=0.054 | N.A. |

5.3.4 From the results of vehicle queuing analysis, the probability of 3 vehicles queuing in front of the entrance is 5.4%. It is therefore concluded that 6 waiting spaces are adequate to meeting the proposed development traffic demand and will not affect the traffic flow at the junction of Castle Peak Road – San Tin and Tam Kon Chau Road.

## 5.4 Sensitivity Test

5.4.1 San Tin Technopole (STT) is a large-scale development which will become a hub for clustered I&T. A sensitivity test is conducted to access the traffic impacts of proposed development on STT development potential.

5.4.2 The large-scale development of STT will be constructed and intake by different phases, the summary of development phase is shown in **Table 5.5**.

**Table 5.5 Phasing of San Tin Technopole**

| Phases[(1)] | Proposed Commencement of Works | Proposed Intake Year |
|---|---|---|
| Initial Phase | Year 2024 | Year 2031 |
| Main Phase | Year 2026 | Year 2034 |
| Remaining Phase | Year 2032 | Year 2039 |

Remark: (1) Source from EIA study of First Phase Development of the New Territories North – San Tin / Lok Ma Chau Development Node - Investigation.

5.4.3 The related development schedules and estimated traffic generations after the full population intake of San Tin Technopole are summarized in below **Table 5.6**.

**Table 5.6 Development Trips of San Tin Technopole Adopted in Assessment**

| Ref.[(1)] | Development Schedule | Parameters | Trip Generations (pcu/hr) | | | |
|---|---|---|---|---|---|---|
| | | | AM Peak | | PM Peak | |
| | | | Gen | Att | Gen | Att |
| San Tin Technopole (Initial Phase, Main Phase and Remaining Phase) | Information and Technology (I&T) Section | (120,000 Employment) | 2,139[(2)] | 3,080[(2)] | 1,976[(2)] | 1,477[(2)] |
| | Logistics & Storage and Workshop | (Approximate 758,000 $m^2$) | 702[(3)] | 1,051[(3)] | 1,023[(3)] | 795[(3)] |

| Ref.(1) | Development Schedule | Parameters | Trip Generations (pcu/hr) | | | |
|---|---|---|---|---|---|---|
| | | | AM Peak | | PM Peak | |
| | | | Gen | Att | Gen | Att |
| | Public Housing | Approximate 37,800 units (Average house/flat size of about 50 $m^2$) | 2,352 (4) | 1,611(4) | 1,123(4) | 1,516(4) |
| | Private Housing | Approximate 16,200 units (Average house/flat size of about 60 $m^2$) | 1164(4) | 689(4) | 464(4) | 600(4) |
| | Mixed Use | (Approximate 482,546$m^2$) | 1,109(5) | 1,175(5) | 1,497(5) | 1,720(5) |
| | **Total** | | **7,466** | **7,606** | **6,083** | **6,108** |

Remark:
(1) Source from EIA study of First Phase Development of the New Territories North – San Tin / Lok Ma Chau Development Node - Investigation.
(2) Based on 120,000 I&T employment in TPB Land Use Proposal; average daily mechanised home-based work trips per employed person of 1.41 trips, peak hour percentage to daily total trips of 12%, distribution of boardings by transport mode (LRT, tram and ferry excluded) in TCS 2011 (87.4% of PT trips and 12.6% of PC/Taxi trips); and assumed capacity of franchised bus, PLB, shuttle bus and PC.
(3) Based on site area measurement, plot ratio of 2/ 5 in RODP, and traffic generation and attraction rates for industrial building in TPDM.
(4) Consideration of new flat units about 50,000-54,000 in TPB land use proposal, and the overall public to private housing ratio in terms of number of flats for the STT is about 70:30. Therefore, the number of flats of public and private housing will be based on the ratio. The traffic generation and attraction rates of subsidised housing: HOS/PSPS will be adopted for public housing, and the trip rates of private housing: high-density/R(A)in TPDM will be adopted for private housing.
(5) Based on site area measurement, plot ratio of non-domestic is 2.5/4 in RODP, and traffic generation and attraction rates for Retail / Shopping Complex in TPDM.

5.4.4 Comparing the traffic trips of STT and proposed development, the result in **Table 5.7** reveals that the traffic trips of proposed development are less than 1% of the trips of STT. It shows that the proposed development would not affect the development potential of San Tin Technopole. The comparisons of trip generations between STT and proposed development are shown in **Table 5.7**.

**Table 5.7 Comparison of Trip Generations between STT and Proposed Development**

| Ref. | Trip Generations (pcu/hr) | | | |
|---|---|---|---|---|
| | AM Peak | | PM Peak | |
| | Gen | Att | Gen | Att |
| San Tin Technopole (Initial Phase, Main Phase and Remaining Phase) | 7,466 | 7,606 | 6,083 | 6,108 |
| Proposed Development | 68 | 54 | 35 | 46 |
| Proportion (Proposed Development/STT) | 0.9% | 0.7% | 0.6% | 0.8% |

# 6. PUBLIC TRANSPORT ASSESSMENT

## 6.1 Public transport services in the vicinity

6.1.1 Public transport occupancy surveys were conducted at Mai Po bus stop in a typical weekday, to identify if there is surplus in the current public transport services. Details of the current services of franchised bus and GMB route and the survey results are listed in **Table 6.1**.

**Table 6.1 Existing Road-based Public Transport Services in the Vicinity (AM & PM Peak)**

| Bound | Mode | Route No. | Observed No. of Vehicles | Total Service Capacity (pax)(1) | Observed Occupancy (pax) | Occupancy Rate (%) |
|---|---|---|---|---|---|---|
| **AM Peak Hour** | | | | | | |
| Yuen Long | Bus | 76K | 3 | 330 | 49 | 15% |
| | GMB | 75 | 9 | 144 | 66 | 46% |
| | | 76 | 3 | 48 | 24 | 50% |
| | | 78 | 2 | 32 | 11 | 34% |
| | PLB | 17 | 31 | 496 | 242 | 49% |
| | | | **Total** | **1050** | **392** | **37%** |
| Sheung Shui / San Tin | Bus | 76K | 2 | 220 | 47 | 21% |
| | GMB | 75 | 11 | 176 | 98 | 56% |
| | | 76 | 3 | 48 | 33 | 69% |
| | | 78 | 2 | 32 | 19 | 59% |
| | PLB | 17 | 19 | 304 | 188 | 62% |
| | | | **Total** | **780** | **385** | **49%** |
| **PM Peak Hour** | | | | | | |
| Yuen Long | Bus | 76K | 2 | 220 | 71 | 32% |
| | GMB | 75 | 10 | 160 | 152 | 95% |
| | | 76 | 4 | 64 | 37 | 58% |
| | | 78 | 2 | 32 | 15 | 47% |
| | PLB | 17 | 23 | 368 | 330 | 90% |
| | | | **Total** | **844** | **605** | **72%** |
| Sheung Shui / San Tin | Bus | 76K | 3 | 330 | 29 | 9% |
| | GMB | 75 | 5 | 80 | 71 | 89% |
| | | 76 | 3 | 48 | 45 | 94% |
| | | 78 | 2 | 32 | 18 | 56% |
| | PLB | 17 | 23 | 368 | 273 | 74% |
| | | | **Total** | **858** | **436** | **51%** |

Remarks:

(1) Assume 16 passengers per GMB and RMB and 110 passengers per bus.

6.1.2 From **Table 6.1**, it can be noted that the bus service has an extensive service coverage running between Yuen Long and Sheung Shui, and the passenger demands are mostly severed by KMB 76K, GMB 75 and PLB 17.

6.1.3 To be consistent with the annual traffic growth rate from 2025 to 2031, a +1% p.a. growth rate is applied to the 2025 surveyed passenger demand to estimate the 2031 reference demand for public transport.

## 6.2 Additional traffic demand from the proposed development

6.2.1 There are mainly two groups of people from proposed development will travel by public transport, namely the staffs of RCHE and visitors of RCHE. The details of estimated trip generation of proposed development are shown in **Table 6.2**.

**Table 6.2 Estimation of Total Public Transport Trips from Proposed Development**

| Item | Proposed Development |
|---|---|
| Nos. of staff of RCHE | 79(1) |
| Nos. of visitor of RCHE | 716*0.4=287(2) |
| Daily trips generated from staff of RCHE in Peak hour | 79*0.82*0.8=52(3) |
| Daily trips generated from visitor of RCHE in Peak hour | 287*0.82*0.15=36(4) |
| Total Trips | 52+36=88 |
| Yuen Long Bound Demand 65% | 58 |
| San Tin/Sheung Shui Bound Demand 35% | 30 |

Remarks:
(1) The number of staff is estimated by client.
(2) According to news, 40% of the people lives in RCHE in HK has visitors once per week.
(3) Estimated 82% of RCHE staffs will travel by public transport, and 80% of trips will occur in peak hour.
(4) Estimated 82% of RCHE visitors will travel by public transport, and estimated 15% of trips will occur in peak hour.

6.2.2 From **Table 6.3**, it can be indicated that all the existing public transport services have sufficient capacity to cater for the additional demands due to the proposed development.

**Table 6.3 Estimated Year 2031 Public Transport Demands**

| Peak Hour | Bound | Peak Hour Service Capacity (pax) | Estimated Year 2031 Occupancy (pax)(1) | Additional Passenger Demands (pax)(2) | Overall Passenger Demands (pax) | Occupancy Rate (%) |
|---|---|---|---|---|---|---|
| AM Peak | Yuen Long | 1,050 | 417 | 58 | 475 | 45% |
| | San Tin/Sheung Shui | 780 | 409 | 30 | 439 | 56% |
| PM Peak | Yuen Long | 844 | 643 | 58 | 701 | 83% |
| | San Tin/Sheung Shui | 858 | 463 | 30 | 493 | 57% |

Remarks:
(1) +1.0% annual growth rate is applied to the average observed peak hour PT trips to estimate Year 2031 demand;
(2) Refer to Table 6.2 and Para 6.2.1.

## 6.3 Pedestrian Flow and Queuing Space Assessment

6.3.1 Currently, there are two 1.6m width footpaths connecting the proposed development to the nearby bus stops, with an uncontrolled cautionary crossing near the two bus stops. In the future, one additional pedestrian crossing will be added near the access of proposed development, to facilitate the staff, residences and visitors of RCHE crossing street to the nearby bus stops. A new pedestrian crossing is proposed at the north of the existing bus stops, to facilitate pedestrian access to the southbound bus stop. The pedestrian crossing will be implemented by the applicant and handed over to relevant government department for maintenance. The current and proposed pedestrian facilities are indicated in **Drawing 6.1**.

6.3.2 A pedestrian flows survey was also conducted on a typical weekday, the operational performance of identified footpaths and concerned queuing area of Mai Po bus stops at Castle Peak Road in term of average flow of Level of Services (LOS), as stipulated in Highway Capacity Manual 2000 and Transport Planning & Design Manual (TPDM), has been assessed. The results of peak hour pedestrian flows in 2025 are summarized in **Table 6.4** and **Table 6.5**.

**Table 6.4 2025 Observed Level-Of-Service Assessment**

| Ref. (1) | Actual Width (m) | Effective Width (m) (2) | 2025 Observed Peak Hourly Flow (ped/hr) | | 2025 Observed Peak Flow Rate (ped/min/m) (3) | | LOS (4) | |
|---|---|---|---|---|---|---|---|---|
| | | | AM | PM | AM | PM | AM | PM |
| Fp1 | 2.3 | 1.3 | 10 | 6 | 0.13 | 0.08 | A | A |
| Fp2 | 2.5 | 1.5 | 12 | 7 | 0.13 | 0.08 | A | A |

Remarks:
(1) Refer to **Drawing 6.1** for locations and operational performance of identified footpaths.
(2) Effective width for footpath = Actual width – 1.0m dead width (0.5m dead width on one side of footpath).
(3) Peak flow rate = Peak hourly flow ÷ 60 ÷ effective width.
(4) Refer to TPDM Vol.6 Chapter 10 Chapter 10.5.2.

**Table 6.5 2025 Observed Queuing Area Level-Of-Service Assessment at Bus Stops**

| Ref. | 2025 Observed Peak Hourly Passenger Flow at Bus Stop (pax/hr) | 2025 Observed Maximum Queue at Queuing Area (pax) | Queuing Area ($m^2$) | Avg. Queuing Space ($m^2$/p) | LOS (1) |
|---|---|---|---|---|---|
| Mai Po Bus Stop – Yuen Long Bound (SB) | 12 | 4 | 9.5 | 2.4 | A |
| Mai Po Bus Stop – Sheung Shui Bound (NB) | 7 | 2 | 11.3 | 5.7 | A |

Remarks:
(1) Refer to HCM2000, EXHIBIT 11-9.

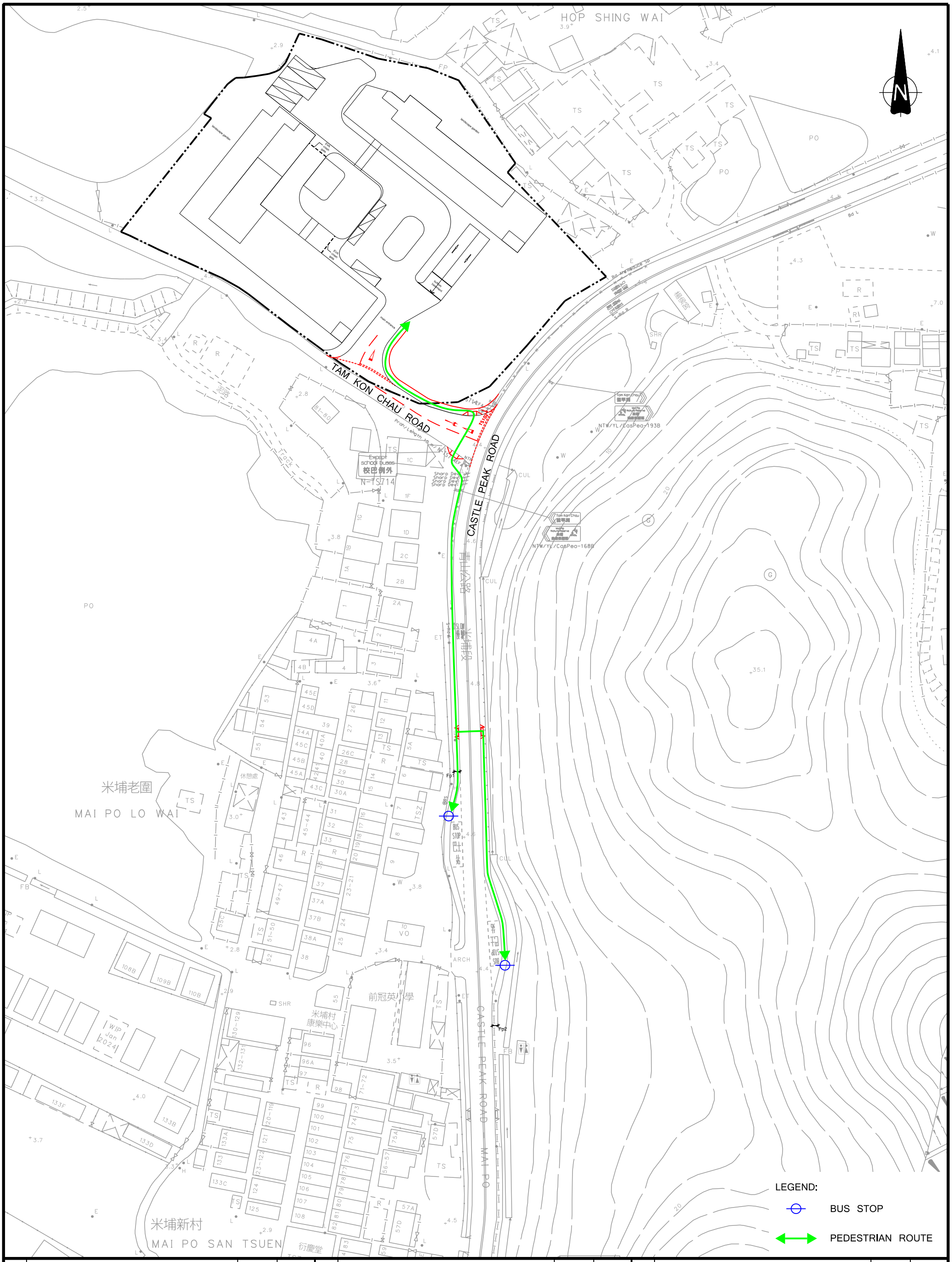


| - | - | - | - | - | - | - | - | - | - | - | - |
|---|---|---|---|---|---|---|---|---|---|---|---|
| Rev. | Description | Checked | Date | Rev. | Description | Checked | Date | Rev. | Description | Checked | Date |

Project Title

TRAFFIC CONSULTANCY SERVICES FOR PROPOSED ELDERLY HOME IN LOT DD101 76 S.G. & 76 S.H. IN MAI PO. NT

Drawing Title

**CURRENT AND PROPOSED PEDESTRIAN FACILITIES**

| Designed | Checked | Scale | Date | Drawing No. | Rev. |
|---|---|---|---|---|---|
| CCT | JPP | 1:1000(A3) | JUL 2025 | **6.1** | - |

SYSTRA MVA

CHK50769410/TIA/F61.DGN/CKC/01AUG25

Original Size : A3

6.3.3 As shown in **Table 6.4** and **Table 6.5**, the identified footpaths and queuing area at concerned bus stops are currently operating with adequate spare capacities during the typical weekday morning and evening peak hours.

## 6.4 Year 2031 Pedestrian Flow and Queuing Space Assessment

6.4.1 As shown in **Table 4.3**, the projected population planning data suggest that the annual growth rate between Year 2021 and Year 2027 is +0.93% when considering the local TPUs. In conservative approach, +1.0% per annum is adopted for the background pedestrian growth of the local pedestrian flow from Year 2025 to Year 2031, and the consideration of the induced pedestrian trips for franchised bus demand of **Table 6.2**.

6.4.2 The peak hour pedestrian flows for footpath and the level of service for each footpath in Year 2031 under both reference and design scenarios are summarized in **Table 6.6**.

**Table 6.6 2031 Level-Of-Service Assessment**

| Ref. (1) | Actual Width (m) | Effective Width (m) (2) | 2031 Reference Peak Hourly Flow (ped/hr) (3) | | 2031 Reference Peak Flow Rate (ped/min/m) (4) | | LOS (5) | | 2031 Design Peak Hourly Flow (ped/hr)(6) | | 2031 Design Peak Flow Rate (ped/min/m) (4) | | LOS (5) | |
|---|---|---|---|---|---|---|---|---|---|---|---|---|---|---|
| | | | AM | PM | AM | PM | AM | PM | AM | PM | AM | PM | AM | PM |
| Fp1 | 2.3 | 1.3 | 11 | 7 | 0.14 | 0.09 | A | A | 121 | 117 | 1.55 | 1.5 | A | A |
| Fp2 | 2.5 | 1.5 | 13 | 8 | 0.15 | 0.09 | A | A | 79 | 74 | 0.88 | 0.83 | A | A |

Remark:
(1) Refer to **Drawing 6.1** for locations and operational performance of identified footpaths.
(2) Effective width for footpath = Actual width – 1.0m dead width (0.5m dead width on one side of footpath).
(3) Reference pedestrian flow = Year 2025 peak hour pedestrian flows*(1+adopted growth rate of 1.0%)^9.
(4) Peak flow rate = Peak hourly flow ÷ 60 ÷ effective width.
(5) Refer to TPDM Vol.6 Chapter 10 Chapter 10.5.2.
(6) Design pedestrian flow = Reference pedestrian flow + induced pedestrian trips for franchised bus demand

6.4.3 For the assessment of queuing area for the two bus stops, the results of concerned queuing area of bus stops are summarized in **Table 6.7.**

**Table 6.7 2031 Queuing Area Level-Of-Service Assessment for Bus Stops**

| Ref. | Queuing Area ($m^2$) | 2031 Reference | | | | 2031 Design | | | |
|---|---|---|---|---|---|---|---|---|---|
| | | Passenger Flow at Bus Stop (pax/hr)(1) | Maximum Queue at Queuing Area (pax) | Avg. Queuing Space ($m^2$/p)(2) | LOS (3) | Passenger Flow at Bus Stop (pax/hr)(4) | Maximum Queue at Queuing Area (pax) | Avg. Queuing Space ($m^2$/p) | LOS (3) |
| Mai Po Bus Stop – Yuen Long Bound (SB) | 9.5 | 13 | 5 (i.e. 13/60x20) | 1.90 | A | 47 | 16 (i.e. 47/60x20) | 0.61 | C |
| Mai Po Bus Stop – Sheung Shui / San Tin Bound (NB) | 11.3 | 8 | 4 (i.e. 8/60x30) | 2.83 | A | 27 | 14 (i.e. 27/60x30) | 0.86 | C |

Note:
(1) Reference pedestrian flow = Year 2025 peak hour passenger flows*(1+adopted growth rate of 1.0%)^9
(2) Average Queuing Space = Queuing Area ÷ (Maximum Queue)
(3) Refer to HCM2000, EXHIBIT 11-9.
(4) Design pedestrian flow = Reference pedestrian flow + induced passenger demand for franchised bus

6.4.4 As shown in **Table 6.6** and **Table 6.7**, the results indicate that the identified footpaths are operating with adequate spare capacities to cater for the future demand during the peak hours under reference and design scenarios. And the LOS of queuing area at two bus stops would be operated with LOS C under the Year 2031 design scenario.

# 7. CONCLUSION

## 7.1 Summary

7.1.1 The application site is currently zoned as a "Village Type Development (V)" under the latest approved Mai Po & Fairview Park Outline Zoning Plan (OZP) no. S/YL-MP/6. The application site is intended to be re-developed into a Residential Care Home for the Elderly (RCHE).

7.1.2 Since there is no parking standard in the latest Hong Kong Planning Standard Guideline (HKPSG) for RCHE, case study research on similar RCHE has been conducted to obtain the appropriate provision rate for internal transport facilities.

7.1.3 In order to review the traffic impact of the new developments on the vicinity, traffic surveys have been conducted to establish the current peak hour traffic condition in the vicinity.

7.1.4 The proposed development would be completed in year 2028. The design year of 2031, three years after full occupation, is therefore adopted in this study for forecasting and assessment purposes. This study have considered the future local developments and the latest Government planning assumptions.

7.1.5 For the layout of J/O Castle Peak Road/ Shek Wu Wai Road (D), J/O Shek Wu Wai Road / San Tin Highway Slip Road (F) and the J/O Mai Po Lung Road / Shek Wu Wai Road (G) in Year 2031, are refer to San Tin Technopole gazette documents.

7.1.6 Operational performances at the key junctions have been assessed in accordance with the anticipated year 2031 traffic flow and it is found that all the identified local junctions are operating within capacity.

7.1.7 Public transport surveys have been conducted to establish the current peak hours traffic condition and anticipated future public transport demands by the proposed development. The assessment indicated that all the existing public transport services have sufficient capacity to cater for the additional demands due to the proposed development.

7.1.8 Operational performance of pedestrian flows and queuing space assessment have been assessed based on the anticipated year 2031 pedestrian flows. It is shown that the LOS of the identified road link and queuing area at bus stops would be operating within capacity in Year 2031.

7.1.9 Due to Tam Kon Chau Road is a prohibited zone, link assessment for Tam Kon Chau Road has been conducted, and the result shows that Tam Kon Chau Road is operating with ample capacity at present but will over its capacity in the year 2031 design case. Therefore, road widening scheme for Tam Kon Chau Road is proposed.

## 7.2 Conclusion

7.2.1 In view of the above, the proposed development under this Section 16 application is considered acceptable in traffic term.

# Appendix A

# Signal Calculation Sheets

# Simplified Priority Junction Capacity Calculation

| | | | |
|---|---|---|---|
| Job Title: | Elderly Home in Lot DD101 76 S.G. & 76 S.H. in Mai Po | | |
| Junction: | Castle Peak Road - TAM Kon Chau Road (A) | Designed by: | GTL |
| Scheme: | Observed Flow | Checked by: | JPP |
| Design Year: 2031 | Job No.: CHK50769410 | Date: | Feb-24 |
| Arm A: | Castle Peak Road(EB) | | |
| Arm B: | TAM Kon Chau Road | | |
| Arm C: | Castle Peak Road(WB) | | |

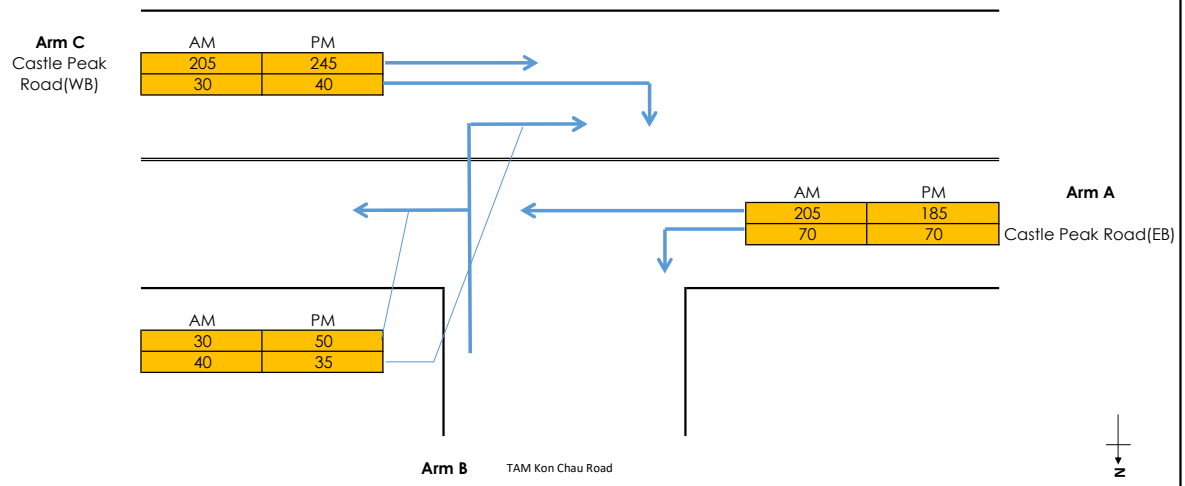


**GEOMETRY**

| | | | | | |
|---|---|---|---|---|---|
| Major Road Width (m) | W | 6.25 | Lane widths (m) | w(b-a) | 2.65 |
| Central Reserve Width (m) | Wcr | 0.00 | | w(b-c) | 2.65 |
| Blockage of major road right turn | Y/N? | Y | | w(c-b) | 3.25 |
| Combined stream on minor arm | Y/N? | Y | | | |
| Visibility Distances (m) | Vr(b-a) | 25 | Calculated | D | 0.7649 |
| | Vl(b-a) | 22 | Parameters | E | 0.8285 |
| | Vr(b-c) | 25 | | F | 0.8948 |
| | Vr(c-b) | 42 | | Y | 0.7844 |

| **ANALYSIS** | | **AM PEAK** | **PM PEAK** |
|---|---|---|---|
| TRAFFIC FLOWS (pcu/hr) | q(c-a) | 205 | 245 |
| | q(c-b) | 30 | 40 |
| | q(a-b) | 70 | 70 |
| | q(a-c) | 205 | 185 |
| | q(b-a) | 40 | 35 |
| | q(b-c) | 30 | 50 |
| | f | 0.43 | 0.59 |
| CAPACITIES (pcu/hr) | Q(b-ac) | 449.883 | 475.84 |
| | Q(c-a) | 1709.46 | 1680.3 |
| | Q(c-b) | 596.396 | 601.51 |
| RFC's | c-a | 0.12 | 0.15 |
| | c-b | 0.05 | 0.07 |
| | b-ac | 0.16 | 0.18 |
| **RFC** | | **0.16** | **0.18** |

Where Vl and Vr are visibility distances to the left or right of the respective streams
D = (1+0.094(w(b-a)-3.65))(1+0.0009(Vr(b-a)-120))(1+0.0006(Vl(b-a)-150))
E = (1+0.094(w(b-c)-3.65))(1+0.0009(Vr(b-c)-120))
F = (1+0.094(wc-b)-3.65))(1+0.0009(Vr(c-b)-120))
Y = 1-0.0345W
f = proportion of minor traffic turning left
Q(b-ac) = Q(b-c)*Q(b-a)/(1-f)*Q(b-c)+f*Q(b-a)  Capacity of combined streams

***All the above formulas are in accordance to T.P.D.M. Volume 2 Chapter 4 Appendix 1***

# Simplified Priority Junction Capacity Calculation

| | | | |
|---|---|---|---|
| Job Title: | Elderly Home in Lot DD101 76 S.G. & 76 S.H. in Mai Po | | |
| Junction: | Castle Peak Road - San Tam Road (B) | Designed by: | GTL |
| Scheme: | Observed Flow | Checked by: | JPP |
| Design Year: 2031 | Job No.: CHK50769410 | Date: | Feb-24 |
| Arm A: | Castle Peak Road(WB) | | |
| Arm B: | San Tam Road | | |
| Arm C: | Castle Peak Road(EB) | | |
| Arm D: | N/A | | |

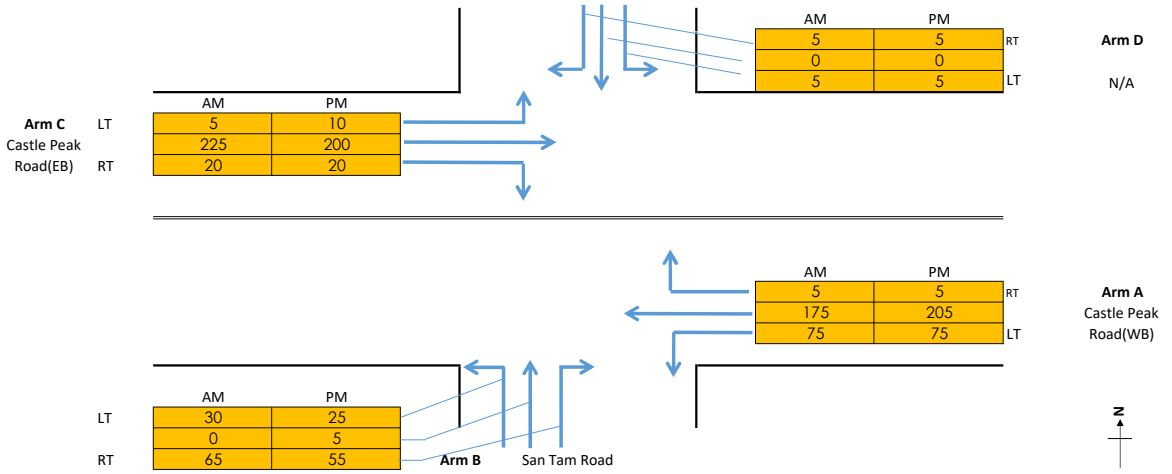


**GEOMETRY**

| | | |
|---|---|---|
| Major Road Width (m) | W | 7.25 |
| Central Reserve Width (m) | Wcr | 0.00 |

**Arm B**

| | | | | | |
|---|---|---|---|---|---|
| Lane widths (m) | w(b-a) | 3.55 | Blockage of major road RT (c-b block c-a)? | | Y |
| | w(b-c) | 3.55 | | | |
| | w(c-b) | 4.00 | Combined stream on minor arm B? | | Y |
| Visibility Distances (m) | Vr(b-a) | 30 | Calculated Parameters | D | 0.8415 |
| | Vl(b-a) | 24 | | E | 0.9104 |
| | Vr(b-c) | 30 | | F | 0.9678 |
| | Vr(c-b) | 50 | | Y | 0.7499 |

**Arm D**

| | | | | | |
|---|---|---|---|---|---|
| Lane widths (m) | w(d-a) | 2.50 | Blockage of major road RT (a-d block a-c)? | | Y |
| | w(d-c) | 2.50 | | | |
| | w(a-d) | 3.25 | Combined stream on minor arm D? | | Y |
| Visibility Distances (m) | Vr(d-c) | 17 | Calculated Parameters | D | 0.7471 |
| | Vl(d-c) | 22 | | E | 0.8092 |
| | Vr(d-a) | 17 | | F | 1.0317 |
| | Vr(d-a) | 200 | | Y | 0.7499 |

**ANALYSIS**

| | | AM Peak | PM Peak |
|---|---|---|---|
| TRAFFIC FLOWS (pcu/hr) | q(c-a) | 225 | 200 |
| | q(c-b) | 20 | 20 |
| | q(a-b) | 75 | 75 |
| | q(a-c) | 180 | 210 |
| | q(b-a) | 65 | 55 |
| | q(b-c) | 30 | 30 |
| | f | 0.32 | 0.35 |
| CAPACITIES (pcu/hr) | Q(b-ac) | 485.9 | 487.63 |
| | Q(c-a) | 1744.9 | 1744.3 |
| | Q(c-b) | 653.7 | 645.74 |
| RFC's | c-a | 0.13 | 0.11 |
| | c-b | 0.03 | 0.03 |
| | b-ac | 0.20 | 0.17 |
| **RFC** | | **0.20** | **0.17** |

| | | AM Peak | PM Peak |
|---|---|---|---|
| TRAFFIC FLOWS (pcu/hr) | q(a-c) | 175 | 205 |
| | q(a-d) | 5 | 10 |
| | q(c-d) | 5 | 10 |
| | q(c-a) | 245 | 220 |
| | q(d-c) | 5 | 5 |
| | q(d-a) | 5 | 5 |
| | f | 0.50 | 0.50 |
| CAPACITIES (pcu/hr) | Q(d-ac) | 458.6 | 460.0 |
| | Q(a-c) | 1787.1 | 1774.4 |
| | Q(a-d) | 698.2 | 703.8 |
| | a-c | 0.10 | 0.12 |
| | a-d | 0.01 | 0.01 |
| | d-ac | 0.02 | 0.02 |

Where Vl and Vr are visibility distances to the left or right of the respective streams

D = (1+0.094(w(b-a)-3.65))(1+0.0009(Vr(b-a)-120))(1+0.0006(Vl(b-a)-150))

E = (1+0.094(w(b-c)-3.65))(1+0.0009(Vr(b-c)-120))

F = (1+0.094(wc-b)-3.65))(1+0.0009(Vr(c-b)-120))

Y = 1-0.0345W

f = proportion of minor traffic turning left

Q(b-ac) = Q(b-c)*Q(b-a)/(1-f)*Q(b-c)+f*Q(b-a) Capacity of combined streams

***All the above formulas are in accordance to T.P.D.M. V.2.4 Appendix 1***

# Simplified Priority Junction Capacity Calculation

| | | | |
|---|---|---|---|
| Job Title: | Elderly Home in Lot DD101 76 S.G. & 76 S.H. in Mai Po | | |
| Junction: | Castle Peak Road - Mai Po Road (C) | Designed by: | GTL |
| Scheme: | Observed Flow | Checked by: | JPP |
| Design Year: 2031 | Job No.: CHK50769410 | Date: | Feb-24 |
| Arm A: | Castle Peak Road(EB) | | |
| Arm B: | Mai Po Road | | |
| Arm C: | Castle Peak Road(WB) | | |

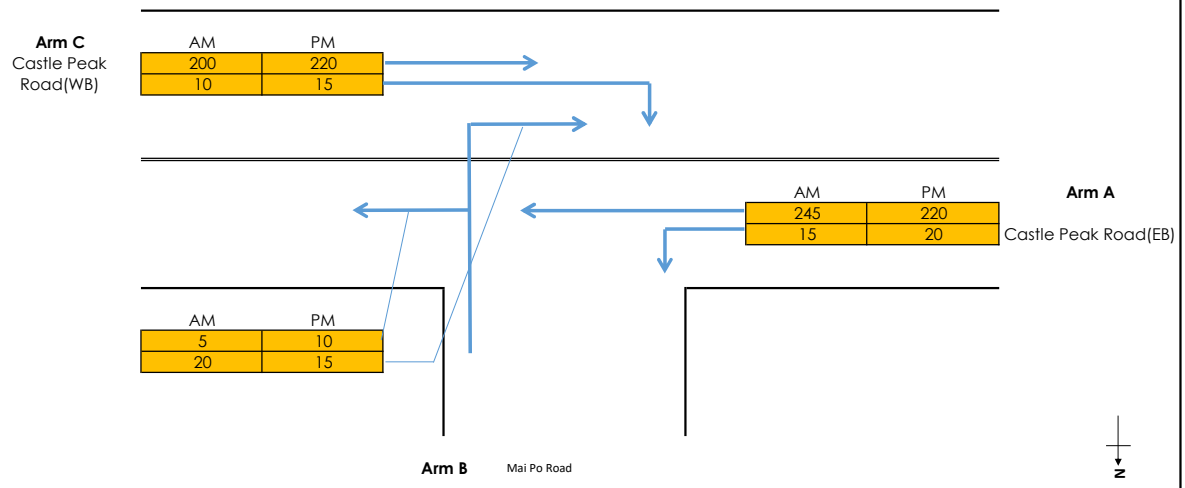


**GEOMETRY**

| | | | | | |
|---|---|---|---|---|---|
| Major Road Width (m) | W | 6.95 | Lane widths (m) | w(b-a) | 3.05 |
| Central Reserve Width (m) | Wcr | 0.00 | | w(b-c) | 3.05 |
| Blockage of major road right turn | Y/N? | Y | | w(c-b) | 3.50 |
| Combined stream on minor arm | Y/N? | Y | | | |
| Visibility Distances (m) | Vr(b-a) | 55 | Calculated | D | 0.8324 |
| | Vl(b-a) | 45 | Parameters | E | 0.8884 |
| | Vr(b-c) | 55 | | F | 1.0569 |
| | Vr(c-b) | 200 | | Y | 0.7602 |

| **ANALYSIS** | | **AM PEAK** | **PM PEAK** |
|---|---|---|---|
| TRAFFIC FLOWS (pcu/hr) | q(c-a) | 200 | 220 |
| | q(c-b) | 10 | 15 |
| | q(a-b) | 15 | 20 |
| | q(a-c) | 245 | 220 |
| | q(b-a) | 20 | 15 |
| | q(b-c) | 5 | 10 |
| | f | 0.20 | 0.40 |
| CAPACITIES (pcu/hr) | Q(b-ac) | 457.517 | 488.48 |
| | Q(c-a) | 1774.7 | 1762.4 |
| | Q(c-b) | 711.339 | 717.19 |
| RFC's | c-a | 0.11 | 0.12 |
| | c-b | 0.01 | 0.02 |
| | b-ac | 0.05 | 0.05 |
| **RFC** | | **0.11** | **0.12** |

Where Vl and Vr are visibility distances to the left or right of the respective streams
D = (1+0.094(w(b-a)-3.65))(1+0.0009(Vr(b-a)-120))(1+0.0006(Vl(b-a)-150))
E = (1+0.094(w(b-c)-3.65))(1+0.0009(Vr(b-c)-120))
F = (1+0.094(wc-b)-3.65))(1+0.0009(Vr(c-b)-120))
Y = 1-0.0345W
f = proportion of minor traffic turning left
Q(b-ac) = Q(b-c)*Q(b-a)/(1-f)*Q(b-c)+f*Q(b-a)  Capacity of combined streams

***All the above formulas are in accordance to T.P.D.M. Volume 2 Chapter 4 Appendix 1***

# Simplified Priority Junction Capacity Calculation

| | | | |
|---|---|---|---|
| Job Title: | Elderly Home in Lot DD101 76 S.G. & 76 S.H. in Mai Po | | |
| Junction: | Castle Peak Road - Shek Wu Wai Road (D) | Designed by: | GTL |
| Scheme: | Observed Flow | Checked by: | JPP |
| Design Year: 2031 | Job No.: CHK50769410 | Date: | Feb-24 |
| Arm A: | Castle Peak Road(WB) | | |
| Arm B: | Shek Wu Wai Road | | |
| Arm C: | Castle Peak Road(EB) | | |

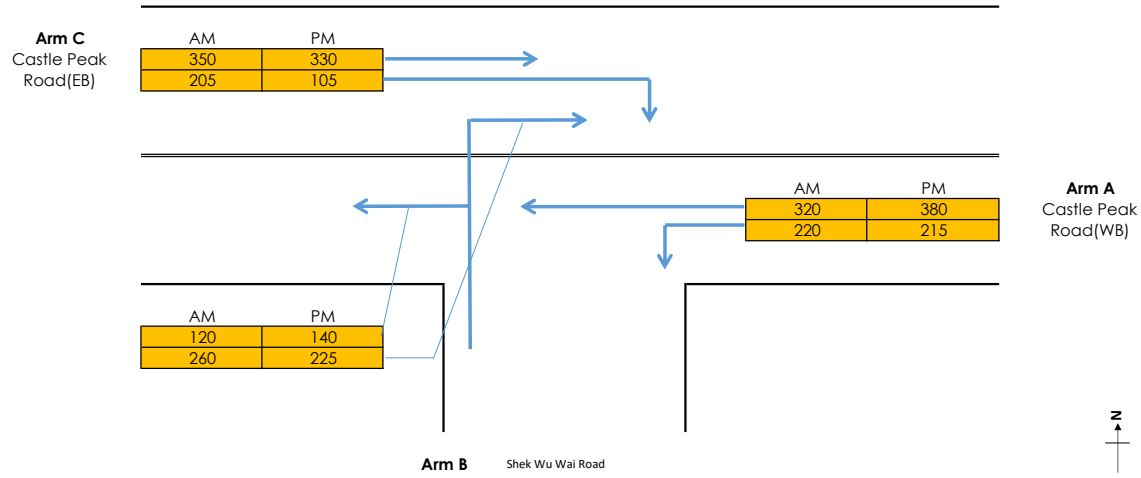


**GEOMETRY**

| | | | | | |
|---|---|---|---|---|---|
| Major Road Width (m) | W | 6.60 | Lane widths (m) | w(b-a) | 4.20 |
| Central Reserve Width (m) | Wcr | 0.00 | | w(b-c) | 4.70 |
| Blockage of major road right turn | Y/N? | Y | | w(c-b) | 3.25 |
| Combined stream on minor arm | Y/N? | N | | | |
| Visibility Distances (m) | Vr(b-a) | 30 | Calculated | D | 0.9074 |
| | Vl(b-a) | 48 | Parameters | E | 1.0137 |
| | Vr(b-c) | 34 | | F | 1.049 |
| | Vr(c-b) | 220 | | Y | 0.7723 |

| **ANALYSIS** | | **AM PEAK** | **PM PEAK** |
|---|---|---|---|
| TRAFFIC FLOWS (pcu/hr) | q(c-a) | 350 | 330 |
| | q(c-b) | 205 | 105 |
| | q(a-b) | 220 | 215 |
| | q(a-c) | 320 | 380 |
| | q(b-a) | 260 | 225 |
| | q(b-c) | 120 | 140 |
| | f | 0.32 | 0.38 |
| CAPACITIES (pcu/hr) | Q(b-a) | 334.226 | 359.07 |
| | Q(b-c) | 639.19 | 622.66 |
| | Q(c-a) | 1207.01 | 1488.1 |
| | Q(c-b) | 622.273 | 606.05 |
| RFC's | c-a | 0.29 | 0.22 |
| | c-b | 0.33 | 0.17 |
| | b-a | 0.78 | 0.63 |
| | b-c | 0.19 | 0.22 |
| **RFC** | | **0.78** | **0.63** |

Where Vl and Vr are visibility distances to the left or right of the respective streams
D = (1+0.094(w(b-a)-3.65))(1+0.0009(Vr(b-a)-120))(1+0.0006(Vl(b-a)-150))
E = (1+0.094(w(b-c)-3.65))(1+0.0009(Vr(b-c)-120))
F = (1+0.094(wc-b)-3.65))(1+0.0009(Vr(c-b)-120))
Y = 1-0.0345W
f = proportion of minor traffic turning left
Q(b-ac) = Q(b-c)*Q(b-a)/(1-f)*Q(b-c)+f*Q(b-a)  Capacity of combined streams

***All the above formulas are in accordance to T.P.D.M. Volume 2 Chapter 4 Appendix 1***

# Simplified Priority Junction Capacity Calculation

| | | | |
|---|---|---|---|
| Job Title: | Elderly Home in Lot DD101 76 S.G. & 76 S.H. in Mai Po | | |
| Junction: | Castle Peak Road - Kwu Tung Road (E) | Designed by: | GTL |
| Scheme: | Observed Flow | Checked by: | JPP |
| Design Year: 2031 | Job No.: CHK50769410 | Date: | Feb-24 |
| Arm A: | Castle Peak Road(WB) | | |
| Arm B: | Kwu Tung Road | | |
| Arm C: | Castle Peak Road(EB) | | |

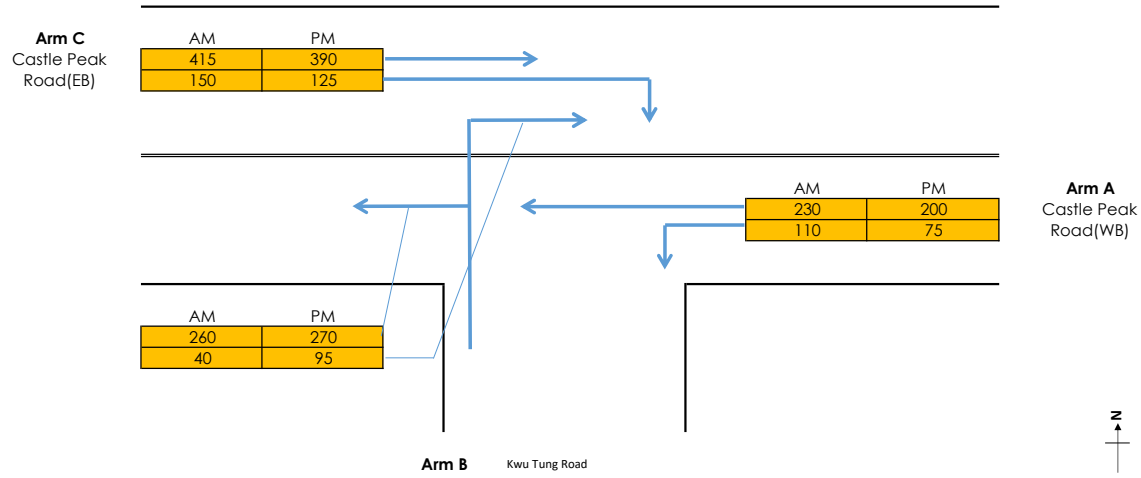


**GEOMETRY**

| | | | | | |
|---|---|---|---|---|---|
| Major Road Width (m) | W | 6.50 | Lane widths (m) | w(b-a) | 4.29 |
| Central Reserve Width (m) | Wcr | 0.00 | | w(b-c) | 4.00 |
| Blockage of major road right turn | Y/N? | Y | | w(c-b) | 3.25 |
| Combined stream on minor arm | Y/N? | N | | | |
| Visibility Distances (m) | Vr(b-a) | 36 | Calculated | D | 0.9059 |
| | Vl(b-a) | 24 | Parameters | E | 0.9622 |
| | Vr(b-c) | 44 | | F | 1.0317 |
| | Vr(c-b) | 200 | | Y | 0.7758 |

| **ANALYSIS** | | **AM PEAK** | **PM PEAK** |
|---|---|---|---|
| TRAFFIC FLOWS (pcu/hr) | q(c-a) | 415 | 390 |
| | q(c-b) | 150 | 125 |
| | q(a-b) | 110 | 75 |
| | q(a-c) | 230 | 200 |
| | q(b-a) | 40 | 95 |
| | q(b-c) | 260 | 270 |
| | f | 0.87 | 0.74 |
| CAPACITIES (pcu/hr) | Q(b-a) | 376.442 | 400.82 |
| | Q(b-c) | 642.558 | 654.47 |
| | Q(c-a) | 1396.75 | 1473.2 |
| | Q(c-b) | 669.562 | 688.5 |
| RFC's | c-a | 0.30 | 0.26 |
| | c-b | 0.22 | 0.18 |
| | b-a | 0.11 | 0.24 |
| | b-c | 0.40 | 0.41 |
| **RFC** | | **0.40** | **0.41** |

Where Vl and Vr are visibility distances to the left or right of the respective streams
D = (1+0.094(w(b-a)-3.65))(1+0.0009(Vr(b-a)-120))(1+0.0006(Vl(b-a)-150))
E = (1+0.094(w(b-c)-3.65))(1+0.0009(Vr(b-c)-120))
F = (1+0.094(wc-b)-3.65))(1+0.0009(Vr(c-b)-120))
Y = 1-0.0345W
f = proportion of minor traffic turning left
Q(b-ac) = Q(b-c)*Q(b-a)/(1-f)*Q(b-c)+f*Q(b-a)  Capacity of combined streams

***All the above formulas are in accordance to T.P.D.M. Volume 2 Chapter 4 Appendix 1***

# Simplified Priority Junction Capacity Calculation

| | | | |
|---|---|---|---|
| Job Title: | Elderly Home in Lot DD101 76 S.G. & 76 S.H. in Mai Po | | |
| Junction: | Shek Wu Wai Road - Slip Road from San Tin Highway (F) | Designed by: | CCT |
| Scheme: | Observed Flow | Checked by: | JPP |
| Design Year: 2031 | Job No.: CHK50769410 | Date: | May-25 |
| Arm A: | Shek Wu Wai Road (NB) | | |
| Arm B: | Slip Road from San Tin Highway (EB) | | |
| Arm C: | Shek Wu Wai Road (SB) | | |

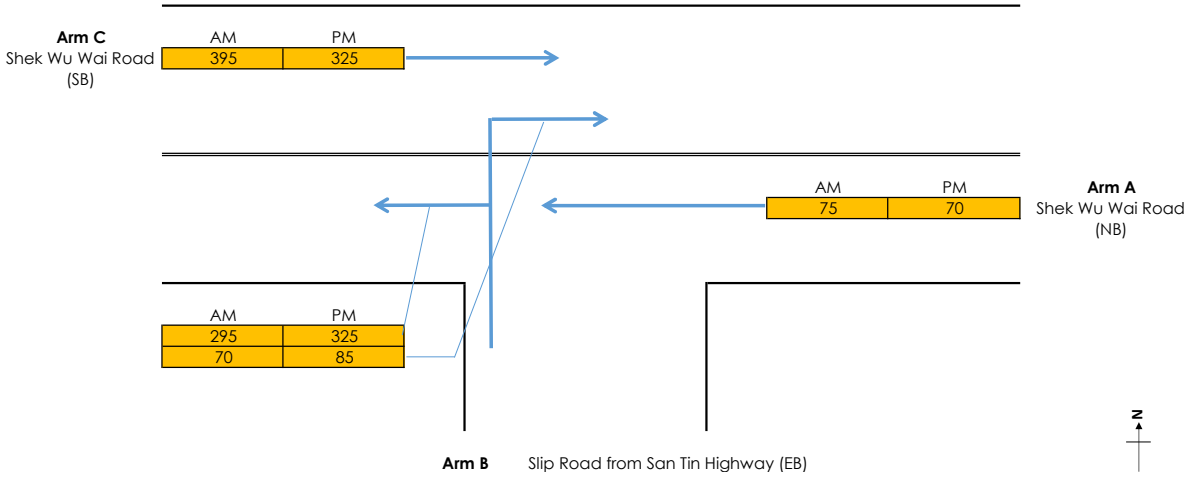


**GEOMETRY**

| | | | | | |
|---|---|---|---|---|---|
| Major Road Width (m) | W | 10.50 | Lane widths (m) | w(b-a) | 4.63 |
| Central Reserve Width (m) | Wcr | 0.00 | | w(b-c) | 4.63 |
| Blockage of major road right turn | Y/N? | | | w(c-b) | 0.00 |
| Combined stream on minor arm | Y/N? | Y | | | |
| Visibility Distances (m) | Vr(b-a) | 25 | Calculated | D | 0.9334 |
| | Vl(b-a) | 41 | Parameters | E | 0.9987 |
| | Vr(b-c) | 25 | | F | 0.586 |
| | Vr(c-b) | | | Y | 0.6378 |

| **ANALYSIS** | | **AM PEAK** | **PM PEAK** |
|---|---|---|---|
| TRAFFIC FLOWS (pcu/hr) | q(c-a) | 395 | 325 |
| | q(c-b) | 0 | 0 |
| | q(a-b) | 0 | 0 |
| | q(a-c) | 75 | 70 |
| | q(b-a) | 70 | 85 |
| | q(b-c) | 295 | 325 |
| | f | 0.81 | 0.79 |
| CAPACITIES (pcu/hr) | Q(b-ac) | 673.632 | 674.13 |
| | Q(c-b) | 426.335 | 427.01 |
| RFC's | c-b | 0.00 | 0.00 |
| | b-ac | 0.54 | 0.61 |
| **RFC** | | **0.54** | **0.61** |

Where Vl and Vr are visibility distances to the left or right of the respective streams
D = (1+0.094(w(b-a)-3.65))(1+0.0009(Vr(b-a)-120))(1+0.0006(Vl(b-a)-150))
E = (1+0.094(w(b-c)-3.65))(1+0.0009(Vr(b-c)-120))
F = (1+0.094(wc-b)-3.65))(1+0.0009(Vr(c-b)-120))
Y = 1-0.0345W
f = proportion of minor traffic turning left
Q(b-ac) = Q(b-c)*Q(b-a)/(1-f)*Q(b-c)+f*Q(b-a)  Capacity of combined streams

***All the above formulas are in accordance to T.P.D.M. Volume 2 Chapter 4 Appendix 1***

# Simplified Priority Junction Capacity Calculation

| | | | |
|---|---|---|---|
| Job Title: | Elderly Home in Lot DD101 76 S.G. & 76 S.H. in Mai Po | | |
| Junction: | Shek Wu Wai Road / Mai Po Lung Road / Slip Road to San Tin Highway (G) | Designed by: | CCT |
| Scheme: | Observed Flow | Checked by: | JPP |
| Design Year: 2031 | Job No.: CHK50769410 | Date: | May-25 |
| Arm A: | Shek Wu Wai Road (SB) | | |
| Arm B: | Shek Wu Wai Road (WB) | | |
| Arm C: | Mai Po Lung Road (NB) | | |
| Arm D: | Slip Road to San Tin Highway (Exit only) | | |

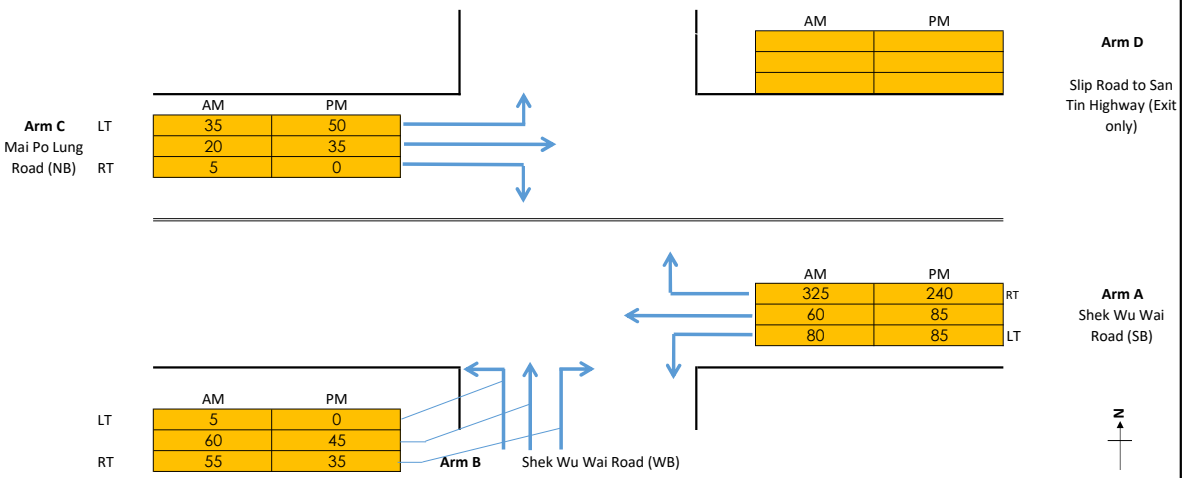


**GEOMETRY**

| | | |
|---|---|---|
| Major Road Width (m) | W | 9.61 |
| Central Reserve Width (m) | Wcr | 0.00 |

**Arm B**

| | | | | | |
|---|---|---|---|---|---|
| Lane widths (m) | w(b-a) | 2.77 | Blockage of major road RT (c-b block c-a)? | | Y |
| | w(b-c) | 2.77 | | | |
| | w(c-b) | 2.20 | Combined stream on minor arm B? | | Y |
| Visibility Distances (m) | Vr(b-a) | 26 | Calculated Parameters | D | 0.8901 |
| | Vl(b-a) | 250 | | E | 0.8397 |
| | Vr(b-c) | 26 | | F | 0.7836 |
| | Vr(c-b) | 17 | | Y | 0.6685 |

**Arm D**

| | | | | | |
|---|---|---|---|---|---|
| Lane widths (m) | w(d-a) | | Blockage of major road RT (a-d block a-c)? | | N |
| | w(d-c) | | | | |
| | w(a-d) | 3.46 | Combined stream on minor arm D? | | |
| Visibility Distances (m) | Vr(d-c) | | Calculated Parameters | D | 0.5332 |
| | Vl(d-c) | | | E | 0.586 |
| | Vr(d-a) | | | F | 0.9114 |
| | Vr(a-d) | 40 | | Y | 0.6685 |

**ANALYSIS**

| | | AM Peak | PM Peak |
|---|---|---|---|
| TRAFFIC FLOWS (pcu/hr) | q(c-a) | 20 | 35 |
| | q(c-b) | 5 | 0 |
| | q(a-b) | 80 | 85 |
| | q(a-c) | 385 | 325 |
| | q(b-a) | 55 | 35 |
| | q(b-c) | 65 | 45 |
| | f | 0.54 | 0.56 |
| CAPACITIES (pcu/hr) | Q(b-ac) | 502.3 | 515.91 |
| | Q(c-a) | 1781.8 | 1800 |
| | Q(c-b) | 495.1 | 505.63 |
| RFC's | c-a | 0.01 | 0.02 |
| | c-b | 0.01 | 0.00 |
| | b-ac | 0.24 | 0.16 |
| **RFC** | | **0.58** | **0.43** |

| | | AM Peak | PM Peak |
|---|---|---|---|
| TRAFFIC FLOWS (pcu/hr) | q(a-c) | 60 | 85 |
| | q(a-d) | 385 | 285 |
| | q(c-d) | 35 | 50 |
| | q(c-a) | 25 | 35 |
| | q(d-c) | 0 | 0 |
| | q(d-a) | 0 | 0 |
| | f | N/A | N/A |
| CAPACITIES (pcu/hr) | Q(d-a) | 253.0 | 267.5 |
| | Q(d-c) | 431.0 | 428.7 |
| | Q(d-ac) | N/A | N/A |
| | Q(a-d) | 665.7 | 660.2 |
| | a-d | 0.58 | 0.43 |
| | d-a | 0.00 | 0.00 |
| | d-c | 0 | 0 |

Where Vl and Vr are visibility distances to the left or right of the respective streams

D = (1+0.094(w(b-a)-3.65))(1+0.0009(Vr(b-a)-120))(1+0.0006(Vl(b-a)-150))

E = (1+0.094(w(b-c)-3.65))(1+0.0009(Vr(b-c)-120))

F = (1+0.094(wc-b)-3.65))(1+0.0009(Vr(c-b)-120))

Y = 1-0.0345W

f = proportion of minor traffic turning left

Q(b-ac) = Q(b-c)*Q(b-a)/(1-f)*Q(b-c)+f*Q(b-a) Capacity of combined streams

***All the above formulas are in accordance to T.P.D.M. V.2.4 Appendix 1***

# Simplified Priority Junction Capacity Calculation

| | | | |
|---|---|---|---|
| Job Title: | Elderly Home in Lot DD101 76 S.G. & 76 S.H. in Mai Po | | |
| Junction: | Castle Peak Road - TAM Kon Chau Road (A) | Designed by: | GTL |
| Scheme: | Reference Flow | Checked by: | JPP |
| Design Year: 2031 | Job No.: 50769410 | Date: | Feb-24 |
| Arm A: | Castle Peak Road(EB) | | |
| Arm B: | TAM Kon Chau Road | | |
| Arm C: | Castle Peak Road(WB) | | |

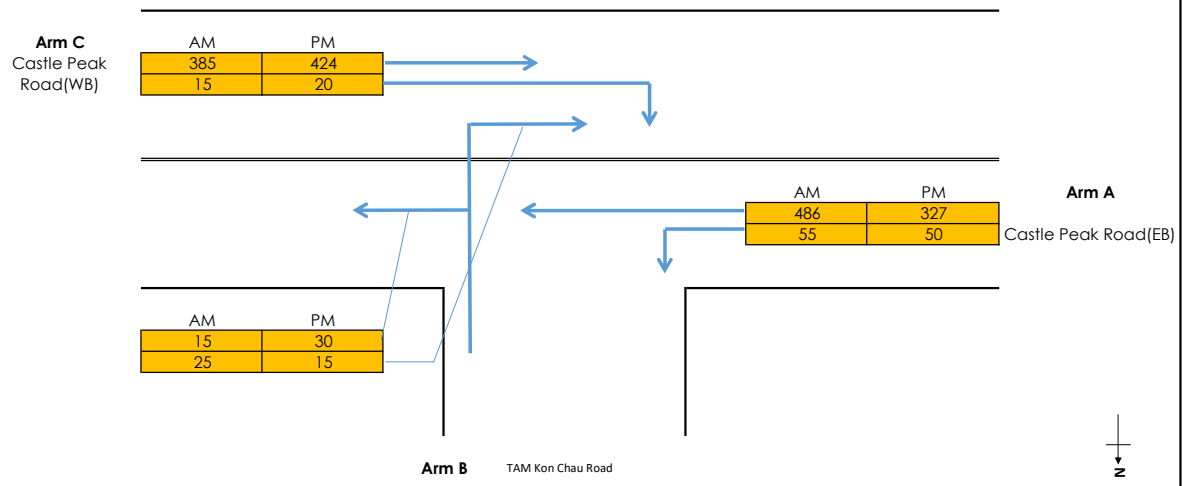


| GEOMETRY | | | | | |
|---|---|---|---|---|---|
| Major Road Width (m) | W | 6.25 | Lane widths (m) | w(b-a) | 2.65 |
| Central Reserve Width (m) | Wcr | 0.00 | | w(b-c) | 2.65 |
| Blockage of major road right turn | Y/N? | Y | | w(c-b) | 3.25 |
| Combined stream on minor arm | Y/N? | Y | | | |
| Visibility Distances (m) | Vr(b-a) | 25 | Calculated | D | 0.7649 |
| | Vl(b-a) | 22 | Parameters | E | 0.8285 |
| | Vr(b-c) | 25 | | F | 0.8948 |
| | Vr(c-b) | 42 | | Y | 0.7844 |

| ANALYSIS | | AM PEAK | PM PEAK |
|---|---|---|---|
| TRAFFIC FLOWS (pcu/hr) | q(c-a) | 385.15 | 424.25 |
| | q(c-b) | 15 | 20 |
| | q(a-b) | 55 | 50 |
| | q(a-c) | 485.54 | 326.56 |
| | q(b-a) | 25 | 15 |
| | q(b-c) | 15 | 30 |
| | f | 0.38 | 0.67 |
| CAPACITIES (pcu/hr) | Q(b-ac) | 362 | 448.96 |
| | Q(c-a) | 1748.92 | 1736.9 |
| | Q(c-b) | 528.554 | 570.45 |
| RFC's | c-a | 0.22 | 0.24 |
| | c-b | 0.03 | 0.04 |
| | b-ac | 0.11 | 0.10 |
| **RFC** | | **0.22** | **0.24** |

Where Vl and Vr are visibility distances to the left or right of the respective streams
D = (1+0.094(w(b-a)-3.65))(1+0.0009(Vr(b-a)-120))(1+0.0006(Vl(b-a)-150))
E = (1+0.094(w(b-c)-3.65))(1+0.0009(Vr(b-c)-120))
F = (1+0.094(wc-b)-3.65))(1+0.0009(Vr(c-b)-120))
Y = 1-0.0345W
f = proportion of minor traffic turning left
Q(b-ac) = Q(b-c)*Q(b-a)/(1-f)*Q(b-c)+f*Q(b-a)  Capacity of combined streams

***All the above formulas are in accordance to T.P.D.M. Volume 2 Chapter 4 Appendix 1***

# Simplified Priority Junction Capacity Calculation

| | | | |
|---|---|---|---|
| Job Title: | Elderly Home in Lot DD101 76 S.G. & 76 S.H. in Mai Po | | |
| Junction: | Castle Peak Road - TAM Kon Chau Road (A) | Designed by: | GTL |
| Scheme: | Design Flow | Checked by: | JPP |
| Design Year: 2031 | Job No.: 50769410 | Date: | Feb-24 |
| Arm A: | Castle Peak Road(EB) | | |
| Arm B: | TAM Kon Chau Road | | |
| Arm C: | Castle Peak Road(WB) | | |

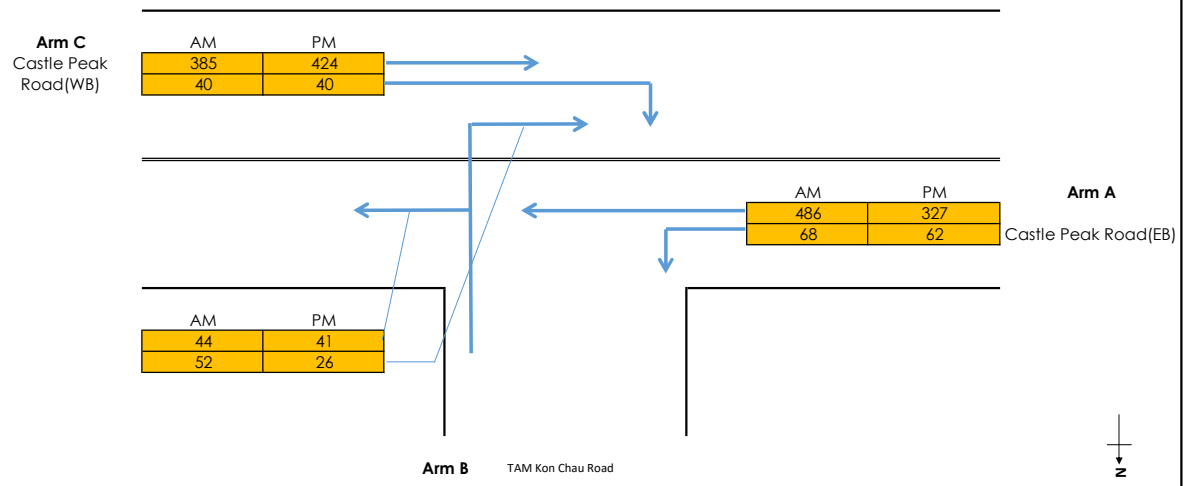


**GEOMETRY**

| | | | | | |
|---|---|---|---|---|---|
| Major Road Width (m) | W | 6.25 | Lane widths (m) | w(b-a) | 2.65 |
| Central Reserve Width (m) | Wcr | 0.00 | | w(b-c) | 2.65 |
| Blockage of major road right turn | Y/N? | Y | | w(c-b) | 3.25 |
| Combined stream on minor arm | Y/N? | Y | | | |
| Visibility Distances (m) | Vr(b-a) | 25 | Calculated Parameters | D | 0.7649 |
| | Vl(b-a) | 22 | | E | 0.8285 |
| | Vr(b-c) | 25 | | F | 0.8948 |
| | Vr(c-b) | 42 | | Y | 0.7844 |

| **ANALYSIS** | | **AM PEAK** | **PM PEAK** |
|---|---|---|---|
| TRAFFIC FLOWS (pcu/hr) | q(c-a) | 385.15 | 424.25 |
| | q(c-b) | 40 | 40 |
| | q(a-b) | 68 | 62 |
| | q(a-c) | 485.54 | 326.56 |
| | q(b-a) | 52 | 26 |
| | q(b-c) | 44 | 41 |
| | f | 0.46 | 0.61 |
| CAPACITIES (pcu/hr) | Q(b-ac) | 368.204 | 432.18 |
| | Q(c-a) | 1662.92 | 1673.1 |
| | Q(c-b) | 525.233 | 567.38 |
| RFC's | c-a | 0.23 | 0.25 |
| | c-b | 0.08 | 0.07 |
| | b-ac | 0.26 | 0.16 |
| **RFC** | | **0.26** | **0.25** |

Where Vl and Vr are visibility distances to the left or right of the respective streams
D = (1+0.094(w(b-a)-3.65))(1+0.0009(Vr(b-a)-120))(1+0.0006(Vl(b-a)-150))
E = (1+0.094(w(b-c)-3.65))(1+0.0009(Vr(b-c)-120))
F = (1+0.094(wc-b)-3.65))(1+0.0009(Vr(c-b)-120))
Y = 1-0.0345W
f = proportion of minor traffic turning left
Q(b-ac) = Q(b-c)*Q(b-a)/(1-f)*Q(b-c)+f*Q(b-a) Capacity of combined streams

***All the above formulas are in accordance to T.P.D.M. Volume 2 Chapter 4 Appendix 1***

# Simplified Priority Junction Capacity Calculation

| | | | |
|---|---|---|---|
| Job Title: | Elderly Home in Lot DD101 76 S.G. & 76 S.H. in Mai Po | | |
| Junction: | Castle Peak Road - San Tam Road (B) | Designed by: | GTL |
| Scheme: | Observed Flow | Checked by: | JPP |
| Design Year: 2031 | Job No.: CHK50769410 | Date: | Feb-24 |
| Arm A: | Castle Peak Road(WB) | | |
| Arm B: | San Tam Road | | |
| Arm C: | Castle Peak Road(EB) | | |
| Arm D: | N/A | | |

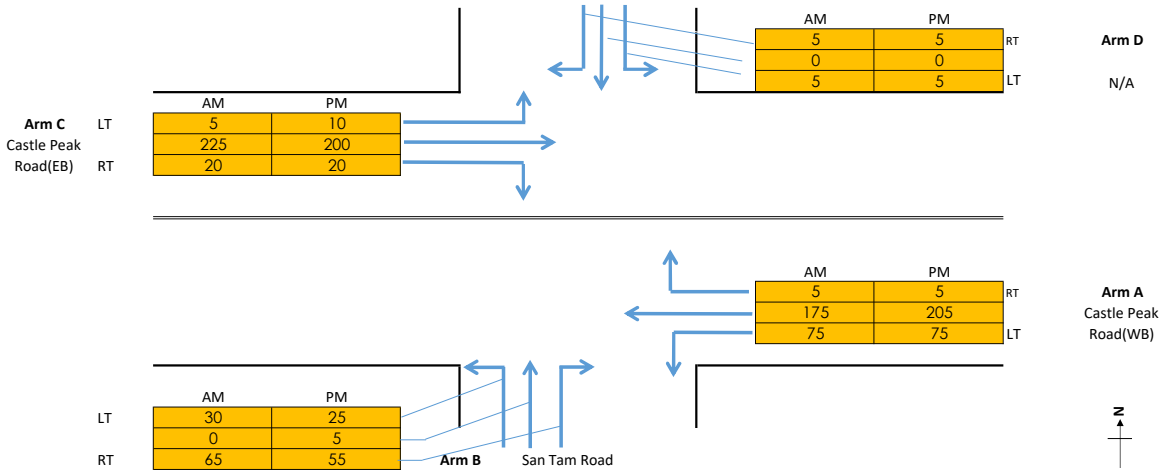


**GEOMETRY**

| | | |
|---|---|---|
| Major Road Width (m) | W | 7.25 |
| Central Reserve Width (m) | Wcr | 0.00 |

**Arm B**

| | | | | | |
|---|---|---|---|---|---|
| Lane widths (m) | w(b-a) | 3.55 | Blockage of major road RT (c-b block c-a)? | | Y |
| | w(b-c) | 3.55 | | | |
| | w(c-b) | 4.00 | Combined stream on minor arm B? | | Y |
| Visibility Distances (m) | Vr(b-a) | 30 | Calculated Parameters | D | 0.8415 |
| | Vl(b-a) | 24 | | E | 0.9104 |
| | Vr(b-c) | 30 | | F | 0.9678 |
| | Vr(c-b) | 50 | | Y | 0.7499 |

**Arm D**

| | | | | | |
|---|---|---|---|---|---|
| Lane widths (m) | w(d-a) | 2.50 | Blockage of major road RT (a-d block a-c)? | | Y |
| | w(d-c) | 2.50 | | | |
| | w(a-d) | 3.25 | Combined stream on minor arm D? | | Y |
| Visibility Distances (m) | Vr(d-c) | 17 | Calculated Parameters | D | 0.7471 |
| | Vl(d-c) | 22 | | E | 0.8092 |
| | Vr(d-a) | 17 | | F | 1.0317 |
| | Vr(d-a) | 200 | | Y | 0.7499 |

**ANALYSIS**

| | | AM Peak | PM Peak |
|---|---|---|---|
| TRAFFIC FLOWS (pcu/hr) | q(c-a) | 225 | 200 |
| | q(c-b) | 20 | 20 |
| | q(a-b) | 75 | 75 |
| | q(a-c) | 180 | 210 |
| | q(b-a) | 65 | 55 |
| | q(b-c) | 30 | 30 |
| | f | 0.32 | 0.35 |
| CAPACITIES (pcu/hr) | Q(b-ac) | 485.9 | 487.63 |
| | Q(c-a) | 1744.9 | 1744.3 |
| | Q(c-b) | 653.7 | 645.74 |
| RFC's | c-a | 0.13 | 0.11 |
| | c-b | 0.03 | 0.03 |
| | b-ac | 0.20 | 0.17 |
| **RFC** | | **0.20** | **0.17** |

| | | AM Peak | PM Peak |
|---|---|---|---|
| TRAFFIC FLOWS (pcu/hr) | q(a-c) | 175 | 205 |
| | q(a-d) | 5 | 10 |
| | q(c-d) | 5 | 10 |
| | q(c-a) | 245 | 220 |
| | q(d-c) | 5 | 5 |
| | q(d-a) | 5 | 5 |
| | f | 0.50 | 0.50 |
| CAPACITIES (pcu/hr) | Q(d-ac) | 458.6 | 460.0 |
| | Q(a-c) | 1787.1 | 1774.4 |
| | Q(a-d) | 698.2 | 703.8 |
| | a-c | 0.10 | 0.12 |
| | a-d | 0.01 | 0.01 |
| | d-ac | 0.02 | 0.02 |

Where Vl and Vr are visibility distances to the left or right of the respective streams

D = (1+0.094(w(b-a)-3.65))(1+0.0009(Vr(b-a)-120))(1+0.0006(Vl(b-a)-150))

E = (1+0.094(w(b-c)-3.65))(1+0.0009(Vr(b-c)-120))

F = (1+0.094(wc-b)-3.65))(1+0.0009(Vr(c-b)-120))

Y = 1-0.0345W

f = proportion of minor traffic turning left

Q(b-ac) = Q(b-c)*Q(b-a)/(1-f)*Q(b-c)+f*Q(b-a) Capacity of combined streams

***All the above formulas are in accordance to T.P.D.M. V.2.4 Appendix 1***

# Simplified Priority Junction Capacity Calculation

| | | | |
|---|---|---|---|
| Job Title: | Elderly Home in Lot DD101 76 S.G. & 76 S.H. in Mai Po | | |
| Junction: | Castle Peak Road - San Tam Road (B) | Designed by: | GTL |
| Scheme: | Reference Flow | Checked by: | JPP |
| Design Year: | 2031 | Job No.: 50769410 | Date: Feb-24 |
| Arm A: | Castle Peak Road(WB) | | |
| Arm B: | San Tam Road | | |
| Arm C: | Castle Peak Road(EB) | | |
| Arm D: | N/A | | |

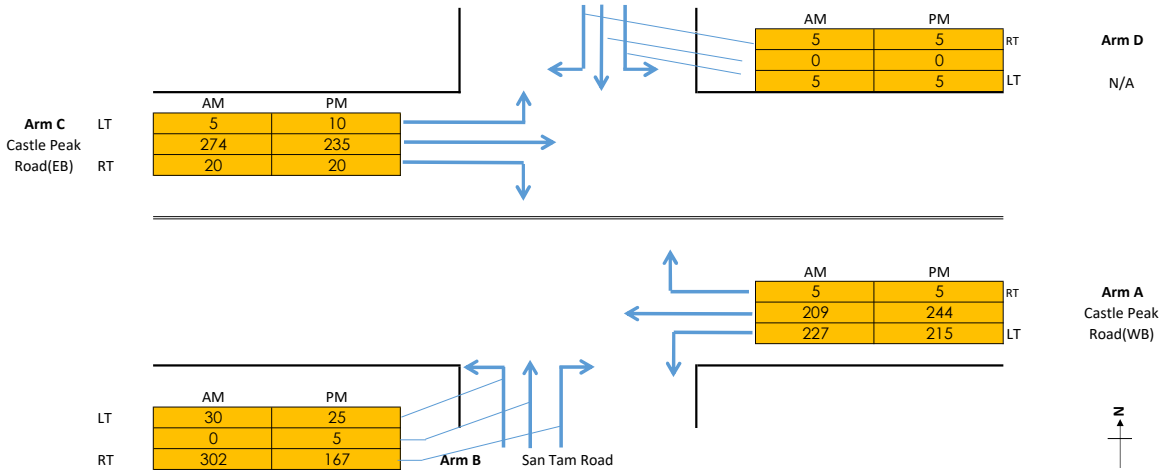


**GEOMETRY**

| | | |
|---|---|---|
| Major Road Width (m) | W | 7.25 |
| Central Reserve Width (m) | Wcr | 0.00 |

**Arm B**

| | | | | | |
|---|---|---|---|---|---|
| Lane widths (m) | w(b-a) | 3.55 | Blockage of major road RT (c-b block c-a)? | | Y |
| | w(b-c) | 3.55 | | | |
| | w(c-b) | 4.00 | Combined stream on minor arm B? | | Y |
| Visibility Distances (m) | Vr(b-a) | 30 | Calculated Parameters | D | 0.8415 |
| | Vl(b-a) | 24 | | E | 0.9104 |
| | Vr(b-c) | 30 | | F | 0.9678 |
| | Vr(c-b) | 50 | | Y | 0.7499 |

**Arm D**

| | | | | | |
|---|---|---|---|---|---|
| Lane widths (m) | w(d-a) | 2.50 | Blockage of major road RT (a-d block a-c)? | | Y |
| | w(d-c) | 2.50 | | | |
| | w(a-d) | 3.25 | Combined stream on minor arm D? | | Y |
| Visibility Distances (m) | Vr(d-c) | 17 | Calculated Parameters | D | 0.7471 |
| | Vl(d-c) | 22 | | E | 0.8092 |
| | Vr(d-a) | 17 | | F | 1.0317 |
| | Vr(d-a) | 200 | | Y | 0.7499 |

**ANALYSIS**

| | | AM Peak | PM Peak |
|---|---|---|---|
| TRAFFIC FLOWS (pcu/hr) | q(c-a) | 273.84 | 234.96 |
| | q(c-b) | 20 | 20 |
| | q(a-b) | 226.5 | 214.9 |
| | q(a-c) | 213.65 | 249.35 |
| | q(b-a) | 302 | 166.6 |
| | q(b-c) | 30 | 30 |
| | f | 0.09 | 0.15 |
| CAPACITIES (pcu/hr) | Q(b-ac) | 424.0 | 430.73 |
| | Q(c-a) | 1740.5 | 1739.8 |
| | Q(c-b) | 604.8 | 598.39 |
| RFC's | c-a | 0.16 | 0.14 |
| | c-b | 0.03 | 0.03 |
| | b-ac | 0.78 | 0.46 |
| **RFC** | | **0.78** | **0.46** |

| | | AM Peak | PM Peak |
|---|---|---|---|
| TRAFFIC FLOWS (pcu/hr) | q(a-c) | 208.65 | 244.35 |
| | q(a-d) | 5 | 10 |
| | q(c-d) | 5 | 10 |
| | q(c-a) | 293.84 | 254.96 |
| | q(d-c) | 5 | 5 |
| | q(d-a) | 5 | 5 |
| | f | 0.50 | 0.50 |
| CAPACITIES (pcu/hr) | Q(d-ac) | 445.2 | 449.0 |
| | Q(a-c) | 1786.9 | 1774.1 |
| | Q(a-d) | 684.5 | 694.0 |
| | a-c | 0.12 | 0.14 |
| | a-d | 0.01 | 0.01 |
| | d-ac | 0.02 | 0.02 |

Where Vl and Vr are visibility distances to the left or right of the respective streams
D = (1+0.094(w(b-a)-3.65))(1+0.0009(Vr(b-a)-120))(1+0.0006(Vl(b-a)-150))
E = (1+0.094(w(b-c)-3.65))(1+0.0009(Vr(b-c)-120))
F = (1+0.094(wc-b)-3.65))(1+0.0009(Vr(c-b)-120))
Y = 1-0.0345W
f = proportion of minor traffic turning left
Q(b-ac) = Q(b-c)*Q(b-a)/(1-f)*Q(b-c)+f*Q(b-a) Capacity of combined streams

***All the above formulas are in accordance to T.P.D.M. V.2.4 Appendix 1***

# Simplified Priority Junction Capacity Calculation

| | | | |
|---|---|---|---|
| Job Title: | Elderly Home in Lot DD101 76 S.G. & 76 S.H. in Mai Po | | |
| Junction: | Castle Peak Road - San Tam Road (B) | Designed by: | GTL |
| Scheme: | Design Flow | Checked by: | JPP |
| Design Year: | 2031 | Job No.: 50769410 | Date: Feb-24 |
| Arm A: | Castle Peak Road(WB) | | |
| Arm B: | San Tam Road | | |
| Arm C: | Castle Peak Road(EB) | | |
| Arm D: | N/A | | |

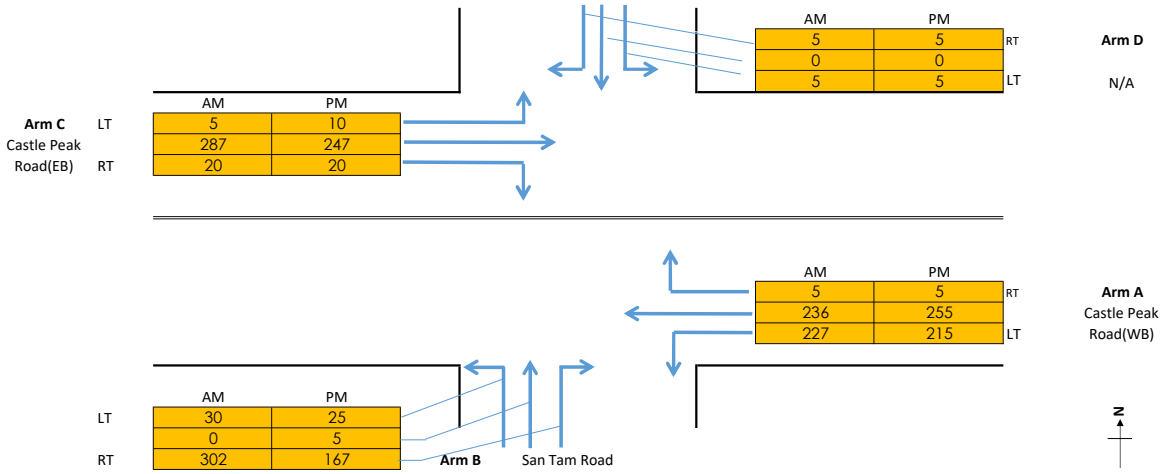


**GEOMETRY**

| | | |
|---|---|---|
| Major Road Width (m) | W | 7.25 |
| Central Reserve Width (m) | Wcr | 0.00 |

**Arm B**

| | | | | | |
|---|---|---|---|---|---|
| Lane widths (m) | w(b-a) | 3.55 | Blockage of major road RT (c-b block c-a)? | | Y |
| | w(b-c) | 3.55 | | | |
| | w(c-b) | 4.00 | Combined stream on minor arm B? | | Y |
| Visibility Distances (m) | Vr(b-a) | 30 | Calculated Parameters | D | 0.8415 |
| | Vl(b-a) | 24 | | E | 0.9104 |
| | Vr(b-c) | 30 | | F | 0.9678 |
| | Vr(c-b) | 50 | | Y | 0.7499 |

**Arm D**

| | | | | | |
|---|---|---|---|---|---|
| Lane widths (m) | w(d-a) | 2.50 | Blockage of major road RT (a-d block a-c)? | | Y |
| | w(d-c) | 2.50 | | | |
| | w(a-d) | 3.25 | Combined stream on minor arm D? | | Y |
| Visibility Distances (m) | Vr(d-c) | 17 | Calculated Parameters | D | 0.7471 |
| | Vl(d-c) | 22 | | E | 0.8092 |
| | Vr(d-a) | 17 | | F | 1.0317 |
| | Vr(d-a) | 200 | | Y | 0.7499 |

**ANALYSIS**

| | | AM Peak | PM Peak |
|---|---|---|---|
| TRAFFIC FLOWS (pcu/hr) | q(c-a) | 286.84 | 246.96 |
| | q(c-b) | 20 | 20 |
| | q(a-b) | 226.5 | 214.9 |
| | q(a-c) | 240.65 | 260.35 |
| | q(b-a) | 302 | 166.6 |
| | q(b-c) | 30 | 30 |
| | f | 0.09 | 0.15 |
| CAPACITIES (pcu/hr) | Q(b-ac) | 415.9 | 426.54 |
| | Q(c-a) | 1739.8 | 1739.5 |
| | Q(c-b) | 597.6 | 595.48 |
| RFC's | c-a | 0.16 | 0.14 |
| | c-b | 0.03 | 0.03 |
| | b-ac | 0.80 | 0.46 |
| **RFC** | | **0.80** | **0.46** |

| | | AM Peak | PM Peak |
|---|---|---|---|
| TRAFFIC FLOWS (pcu/hr) | q(a-c) | 235.65 | 255.35 |
| | q(a-d) | 5 | 10 |
| | q(c-d) | 5 | 10 |
| | q(c-a) | 306.84 | 266.96 |
| | q(d-c) | 5 | 5 |
| | q(d-a) | 5 | 5 |
| | f | 0.50 | 0.50 |
| CAPACITIES (pcu/hr) | Q(d-ac) | 440.0 | 445.4 |
| | Q(a-c) | 1786.8 | 1773.9 |
| | Q(a-d) | 680.8 | 690.6 |
| | a-c | 0.13 | 0.14 |
| | a-d | 0.01 | 0.01 |
| | d-ac | 0.02 | 0.02 |

Where Vl and Vr are visibility distances to the left or right of the respective streams

D = (1+0.094(w(b-a)-3.65))(1+0.0009(Vr(b-a)-120))(1+0.0006(Vl(b-a)-150))

E = (1+0.094(w(b-c)-3.65))(1+0.0009(Vr(b-c)-120))

F = (1+0.094(wc-b)-3.65))(1+0.0009(Vr(c-b)-120))

Y = 1-0.0345W

f = proportion of minor traffic turning left

Q(b-ac) = Q(b-c)*Q(b-a)/(1-f)*Q(b-c)+f*Q(b-a) Capacity of combined streams

***All the above formulas are in accordance to T.P.D.M. V.2.4 Appendix 1***

# Simplified Priority Junction Capacity Calculation

| | | | |
|---|---|---|---|
| Job Title: | Elderly Home in Lot DD101 76 S.G. & 76 S.H. in Mai Po | | |
| Junction: | Castle Peak Road - Mai Po Road (C) | Designed by: | GTL |
| Scheme: | Observed Flow | Checked by: | JPP |
| Design Year: 2031 | Job No.: CHK50769410 | Date: | Feb-24 |
| Arm A: | Castle Peak Road(EB) | | |
| Arm B: | Mai Po Road | | |
| Arm C: | Castle Peak Road(WB) | | |

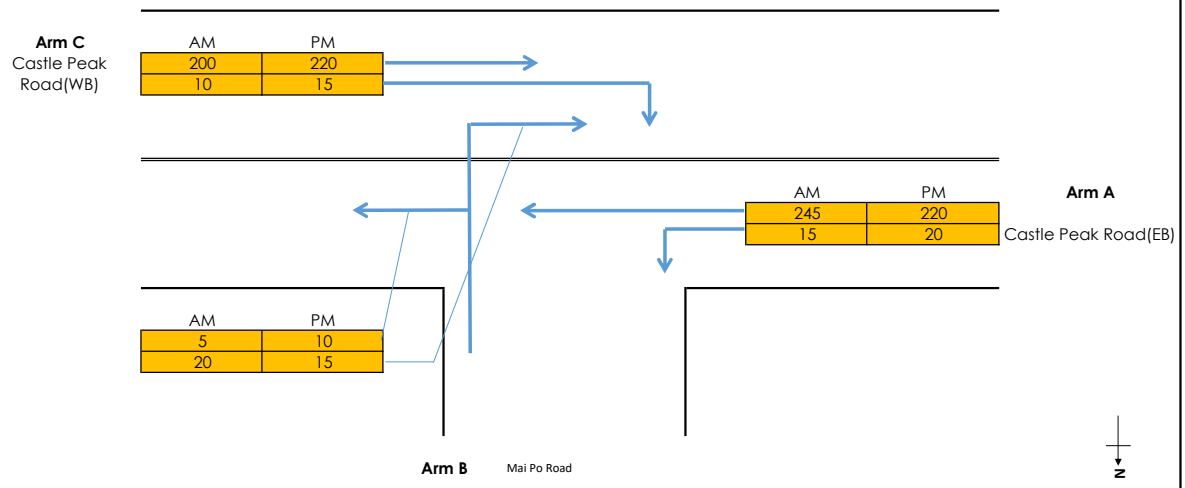


**GEOMETRY**

| | | | | | |
|---|---|---|---|---|---|
| Major Road Width (m) | W | 6.95 | Lane widths (m) | w(b-a) | 3.05 |
| Central Reserve Width (m) | Wcr | 0.00 | | w(b-c) | 3.05 |
| Blockage of major road right turn | Y/N? | Y | | w(c-b) | 3.50 |
| Combined stream on minor arm | Y/N? | Y | | | |
| Visibility Distances (m) | Vr(b-a) | 55 | Calculated | D | 0.8324 |
| | Vl(b-a) | 45 | Parameters | E | 0.8884 |
| | Vr(b-c) | 55 | | F | 1.0569 |
| | Vr(c-b) | 200 | | Y | 0.7602 |

| **ANALYSIS** | | **AM PEAK** | **PM PEAK** |
|---|---|---|---|
| TRAFFIC FLOWS (pcu/hr) | q(c-a) | 200 | 220 |
| | q(c-b) | 10 | 15 |
| | q(a-b) | 15 | 20 |
| | q(a-c) | 245 | 220 |
| | q(b-a) | 20 | 15 |
| | q(b-c) | 5 | 10 |
| | f | 0.20 | 0.40 |
| CAPACITIES (pcu/hr) | Q(b-ac) | 457.517 | 488.48 |
| | Q(c-a) | 1774.7 | 1762.4 |
| | Q(c-b) | 711.339 | 717.19 |
| RFC's | c-a | 0.11 | 0.12 |
| | c-b | 0.01 | 0.02 |
| | b-ac | 0.05 | 0.05 |
| **RFC** | | **0.11** | **0.12** |

Where Vl and Vr are visibility distances to the left or right of the respective streams
D = (1+0.094(w(b-a)-3.65))(1+0.0009(Vr(b-a)-120))(1+0.0006(Vl(b-a)-150))
E = (1+0.094(w(b-c)-3.65))(1+0.0009(Vr(b-c)-120))
F = (1+0.094(wc-b)-3.65))(1+0.0009(Vr(c-b)-120))
Y = 1-0.0345W
f = proportion of minor traffic turning left
Q(b-ac) = Q(b-c)*Q(b-a)/(1-f)*Q(b-c)+f*Q(b-a)  Capacity of combined streams

***All the above formulas are in accordance to T.P.D.M. Volume 2 Chapter 4 Appendix 1***

# Simplified Priority Junction Capacity Calculation

| | | | |
|---|---|---|---|
| Job Title: | Elderly Home in Lot DD101 76 S.G. & 76 S.H. in Mai Po | | |
| Junction: | Castle Peak Road - Mai Po Road (C) | Designed by: | GTL |
| Scheme: | Reference Flow | Checked by: | JPP |
| Design Year: 2031 | Job No.: 50769410 | Date: | Feb-24 |
| Arm A: | Castle Peak Road(EB) | | |
| Arm B: | Mai Po Road | | |
| Arm C: | Castle Peak Road(WB) | | |

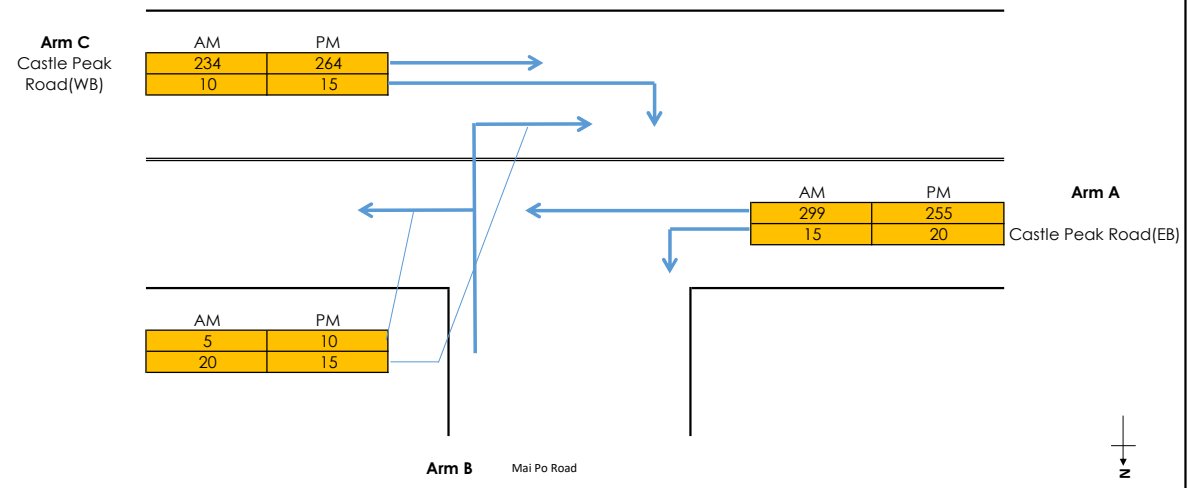


**GEOMETRY**

| | | | | | |
|---|---|---|---|---|---|
| Major Road Width (m) | W | 6.95 | Lane widths (m) | w(b-a) | 3.05 |
| Central Reserve Width (m) | Wcr | 0.00 | | w(b-c) | 3.05 |
| Blockage of major road right turn | Y/N? | Y | | w(c-b) | 3.50 |
| Combined stream on minor arm | Y/N? | Y | | | |
| Visibility Distances (m) | Vr(b-a) | 55 | Calculated | D | 0.8324 |
| | Vl(b-a) | 45 | Parameters | E | 0.8884 |
| | Vr(b-c) | 55 | | F | 1.0569 |
| | Vr(c-b) | 200 | | Y | 0.7602 |

| **ANALYSIS** | | **AM PEAK** | **PM PEAK** |
|---|---|---|---|
| TRAFFIC FLOWS (pcu/hr) | q(c-a) | 233.65 | 264.35 |
| | q(c-b) | 10 | 15 |
| | q(a-b) | 15 | 20 |
| | q(a-c) | 298.84 | 254.96 |
| | q(b-a) | 20 | 15 |
| | q(b-c) | 5 | 10 |
| | f | 0.20 | 0.40 |
| CAPACITIES (pcu/hr) | Q(b-ac) | 440.445 | 475.13 |
| | Q(c-a) | 1774.12 | 1761.8 |
| | Q(c-b) | 695.593 | 706.96 |
| RFC's | c-a | 0.13 | 0.15 |
| | c-b | 0.01 | 0.02 |
| | b-ac | 0.06 | 0.05 |
| **RFC** | | **0.13** | **0.15** |

Where Vl and Vr are visibility distances to the left or right of the respective streams
D = (1+0.094(w(b-a)-3.65))(1+0.0009(Vr(b-a)-120))(1+0.0006(Vl(b-a)-150))
E = (1+0.094(w(b-c)-3.65))(1+0.0009(Vr(b-c)-120))
F = (1+0.094(wc-b)-3.65))(1+0.0009(Vr(c-b)-120))
Y = 1-0.0345W
f = proportion of minor traffic turning left
Q(b-ac) = Q(b-c)*Q(b-a)/(1-f)*Q(b-c)+f*Q(b-a)  Capacity of combined streams

***All the above formulas are in accordance to T.P.D.M. Volume 2 Chapter 4 Appendix 1***

# Simplified Priority Junction Capacity Calculation

| | | | |
|---|---|---|---|
| Job Title: | Elderly Home in Lot DD101 76 S.G. & 76 S.H. in Mai Po | | |
| Junction: | Castle Peak Road - Mai Po Road (C) | Designed by: | GTL |
| Scheme: | Design Flow | Checked by: | JPP |
| Design Year: 2031 | Job No.: 50769410 | Date: | Feb-24 |
| Arm A: | Castle Peak Road(EB) | | |
| Arm B: | Mai Po Road | | |
| Arm C: | Castle Peak Road(WB) | | |

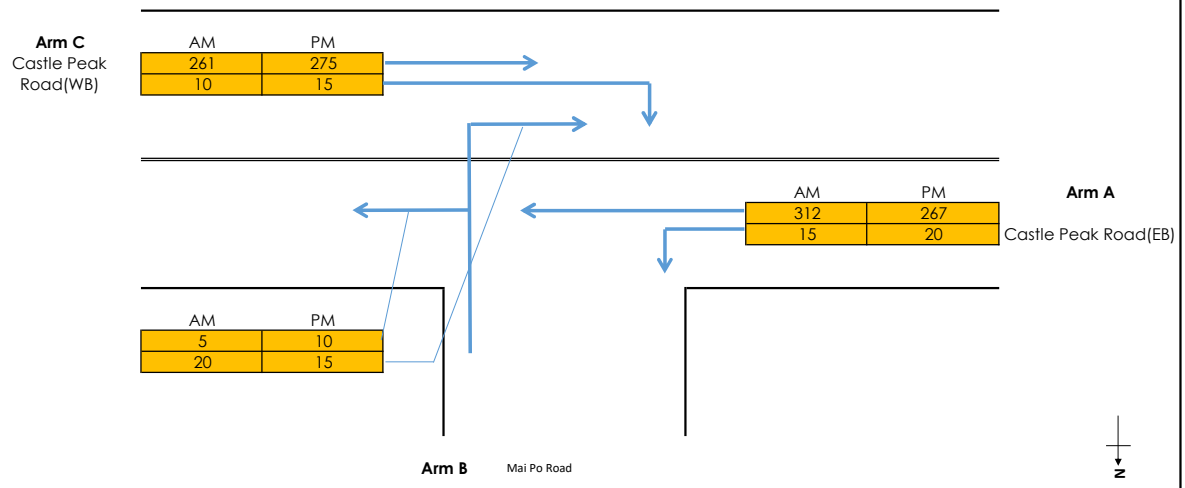


**GEOMETRY**

| | | | | | |
|---|---|---|---|---|---|
| Major Road Width (m) | W | 6.95 | Lane widths (m) | w(b-a) | 3.05 |
| Central Reserve Width (m) | Wcr | 0.00 | | w(b-c) | 3.05 |
| Blockage of major road right turn | Y/N? | Y | | w(c-b) | 3.50 |
| Combined stream on minor arm | Y/N? | Y | | | |
| Visibility Distances (m) | Vr(b-a) | 55 | Calculated | D | 0.8324 |
| | Vl(b-a) | 45 | Parameters | E | 0.8884 |
| | Vr(b-c) | 55 | | F | 1.0569 |
| | Vr(c-b) | 200 | | Y | 0.7602 |

| **ANALYSIS** | | **AM PEAK** | **PM PEAK** |
|---|---|---|---|
| TRAFFIC FLOWS (pcu/hr) | q(c-a) | 260.65 | 275.35 |
| | q(c-b) | 10 | 15 |
| | q(a-b) | 15 | 20 |
| | q(a-c) | 311.84 | 266.96 |
| | q(b-a) | 20 | 15 |
| | q(b-c) | 5 | 10 |
| | f | 0.20 | 0.40 |
| CAPACITIES (pcu/hr) | Q(b-ac) | 433.841 | 471 |
| | Q(c-a) | 1773.98 | 1761.6 |
| | Q(c-b) | 691.791 | 703.45 |
| RFC's | c-a | 0.15 | 0.16 |
| | c-b | 0.01 | 0.02 |
| | b-ac | 0.06 | 0.05 |
| **RFC** | | **0.15** | **0.16** |

Where Vl and Vr are visibility distances to the left or right of the respective streams
D = (1+0.094(w(b-a)-3.65))(1+0.0009(Vr(b-a)-120))(1+0.0006(Vl(b-a)-150))
E = (1+0.094(w(b-c)-3.65))(1+0.0009(Vr(b-c)-120))
F = (1+0.094(wc-b)-3.65))(1+0.0009(Vr(c-b)-120))
Y = 1-0.0345W
f = proportion of minor traffic turning left
Q(b-ac) = Q(b-c)*Q(b-a)/(1-f)*Q(b-c)+f*Q(b-a)  Capacity of combined streams

***All the above formulas are in accordance to T.P.D.M. Volume 2 Chapter 4 Appendix 1***

# Simplified Priority Junction Capacity Calculation

| | | | |
|---|---|---|---|
| Job Title: | Elderly Home in Lot DD101 76 S.G. & 76 S.H. in Mai Po | | |
| Junction: | Castle Peak Road - Shek Wu Wai Road (D) | Designed by: | GTL |
| Scheme: | Observed Flow | Checked by: | JPP |
| Design Year: 2031 | Job No.: CHK50769410 | Date: | Feb-24 |
| Arm A: | Castle Peak Road(WB) | | |
| Arm B: | Shek Wu Wai Road | | |
| Arm C: | Castle Peak Road(EB) | | |

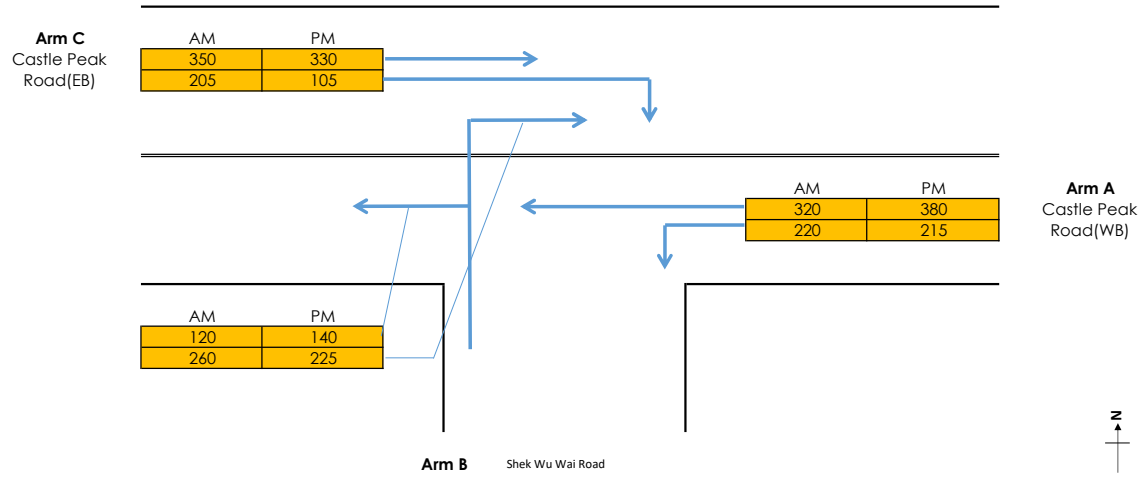


**GEOMETRY**

| | | | | | |
|---|---|---|---|---|---|
| Major Road Width (m) | W | 6.60 | Lane widths (m) | w(b-a) | 4.20 |
| Central Reserve Width (m) | Wcr | 0.00 | | w(b-c) | 4.70 |
| Blockage of major road right turn | Y/N? | Y | | w(c-b) | 3.25 |
| Combined stream on minor arm | Y/N? | N | | | |
| Visibility Distances (m) | Vr(b-a) | 30 | Calculated Parameters | D | 0.9074 |
| | Vl(b-a) | 48 | | E | 1.0137 |
| | Vr(b-c) | 34 | | F | 1.049 |
| | Vr(c-b) | 220 | | Y | 0.7723 |

| **ANALYSIS** | | **AM PEAK** | **PM PEAK** |
|---|---|---|---|
| TRAFFIC FLOWS (pcu/hr) | q(c-a) | 350 | 330 |
| | q(c-b) | 205 | 105 |
| | q(a-b) | 220 | 215 |
| | q(a-c) | 320 | 380 |
| | q(b-a) | 260 | 225 |
| | q(b-c) | 120 | 140 |
| | f | 0.32 | 0.38 |
| CAPACITIES (pcu/hr) | Q(b-a) | 334.226 | 359.07 |
| | Q(b-c) | 639.19 | 622.66 |
| | Q(c-a) | 1207.01 | 1488.1 |
| | Q(c-b) | 622.273 | 606.05 |
| RFC's | c-a | 0.29 | 0.22 |
| | c-b | 0.33 | 0.17 |
| | b-a | 0.78 | 0.63 |
| | b-c | 0.19 | 0.22 |
| **RFC** | | **0.78** | **0.63** |

Where Vl and Vr are visibility distances to the left or right of the respective streams
D = (1+0.094(w(b-a)-3.65))(1+0.0009(Vr(b-a)-120))(1+0.0006(Vl(b-a)-150))
E = (1+0.094(w(b-c)-3.65))(1+0.0009(Vr(b-c)-120))
F = (1+0.094(wc-b)-3.65))(1+0.0009(Vr(c-b)-120))
Y = 1-0.0345W
f = proportion of minor traffic turning left
Q(b-ac) = Q(b-c)*Q(b-a)/(1-f)*Q(b-c)+f*Q(b-a)  Capacity of combined streams

***All the above formulas are in accordance to T.P.D.M. Volume 2 Chapter 4 Appendix 1***

## TRAFFIC SIGNALS CALCULATION

**Job No.:** CHK50769410 **MVA HONG KONG LIMITED**

Junction: Road D3 - Road L11 - Road L12 (D) Design Year: 2031

Description: Reference flows Designed By: CCT Checked By: JPP

| Approach | Movements | Phase | Stage | Width (m) | Radius (m) Left | Radius (m) Right | Gradient (%) | Pro. Turning (%) AM | Pro. Turning (%) PM | Revised Saturation Flow (pcu/hr) AM | Revised Saturation Flow (pcu/hr) PM | AM Peak Flow (pcu/hr) | AM Peak y Value | AM Peak Critical y | PM Peak Flow (pcu/hr) | PM Peak y Value | PM Peak Critical y |
|---|---|---|---|---|---|---|---|---|---|---|---|---|---|---|---|---|---|
| Road L11 (EB) | | A | 1 | 4.000 | 15 | | | | | 1830 | 1830 | 4 | 0.002 | | 2 | 0.001 | |
| | | A | 1 | 4.000 | 17.5 | 20 | | 0% / 48% | 0% / 48% | 2080 | 2080 | 439 | 0.211 | | 305 | 0.146 | |
| | | A | 1 | 4.000 | | 17.5 | | | | 1985 | 1985 | 418 | 0.211 | 0.211 | 290 | 0.146 | 0.146 |
| Road D3 (NB) | | B | 2 | 3.200 | 15 | | | | | 1760 | 1760 | 230 | 0.131 | | 240 | 0.136 | |
| | | B | 2 | 3.200 | 17.5 | | | 100% | 100% | 1910 | 1910 | 250 | 0.131 | 0.131 | 260 | 0.136 | |
| | | B | 2 | 3.200 | | | | | | 2075 | 2075 | 40 | 0.019 | | 19 | 0.009 | |
| | | B | 2 | 3.200 | | 12.5 | | 100% | 100% | 1855 | 1855 | 292 | 0.157 | | 237 | 0.128 | 0.128 |
| Road L12 (WB) | | C | 3 | 3.300 | 12.5 | | | | | 1735 | 1735 | 138 | 0.080 | 0.080 | 146 | 0.084 | |
| | | C | 3 | 3.300 | 15 | | | 73% | 63% | 1945 | 1960 | 154 | 0.079 | | 167 | 0.085 | |
| | | C | 3 | 3.300 | | 20 | | 27% | 12% | 2045 | 2065 | 162 | 0.079 | | 174 | 0.084 | 0.084 |
| Road D3 (SB) | | D | 4 | 4.000 | 12.5 | | | 98% | 101% | 1800 | 1800 | 31 | 0.017 | 0.017 | 28 | 0.016 | |
| | | D | 4 | 4.000 | | | | | | 2155 | 2155 | 13 | 0.006 | | 13 | 0.006 | |
| | | D | 4 | 4.000 | | 20 | | 0% | 0% | 2155 | 2155 | 14 | 0.006 | | 13 | 0.006 | 0.006 |

- In accordance with TPDM V4 - Road Traffic Signals

Formual of Total lost time per cycle L = ∑ (I - 1)

AM peak Group: A,B,C,D L = (6-1)+(6-1)+(7-1)+(7-1) = 22

PM peak Group: A,B,C,D L = (6-1)+(6-1)+(7-1)+(7-1) = 22

**Notes:**

**Flow: (pcu/hr)**

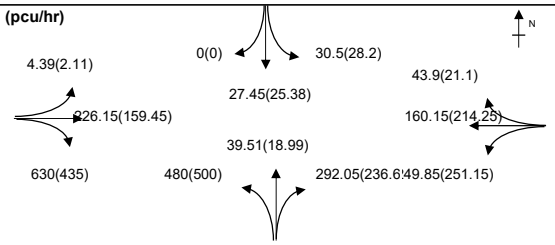


| Group | | A,B,C,D | Group | | A,B,C,D |
|---|---|---|---|---|---|
| y | | 0.421 | y | | 0.358 |
| L (sec) | | 22 | L (sec) | | 22 |
| C (sec) | | 90 | C (sec) | | 90 |
| y pract. | | 0.680 | y pract. | | 0.680 |
| R.C. (%) | | 62% | R.C. (%) | | 90% |

**Stage / Phase Diagrams**

**1.**

**2.**

**3.**

**4.**

**5.**

| | | | | | | | |
|---|---|---|---|---|---|---|---|
| I/G= 6 | | I/G= 6 | | I/G= 7 | | I/G= 7 | |
| I/G= 6 | | I/G= 6 | | I/G= 7 | | I/G= 7 | |

I/G= | | I/G= | |

**Date:** AUG, 2025 **Junction:** (D) Road D3 - Road L11 - Road L12 (D)

## TRAFFIC SIGNALS CALCULATION

**Job No.:** CHK50769410 **MVA HONG KONG LIMITED**

Junction: Road D3 - Road L11 - Road L12 (D) Design Year: 2031

Description: Design flows Designed By: CCT Checked By: JPP

| Approach | Movements | Phase | Stage | Width (m) | Radius (m) Left | Radius (m) Right | Gradient (%) | Pro. Turning (%) AM | Pro. Turning (%) PM | Revised Saturation Flow (pcu/hr) AM | Revised Saturation Flow (pcu/hr) PM | AM Peak Flow (pcu/hr) | AM Peak y Value | AM Peak Critical y | PM Peak Flow (pcu/hr) | PM Peak y Value | PM Peak Critical y |
|---|---|---|---|---|---|---|---|---|---|---|---|---|---|---|---|---|---|
| Road L11 (EB) | | A | 1 | 4.000 | 15 | | | | | 1830 | 1830 | 4 | 0.002 | | 2 | 0.001 | |
| | | A | 1 | 4.000 | 17.5 | 20 | | 0% / 51% | 0% / 50% | 2075 | 2075 | 453 | 0.218 | | 310 | 0.149 | |
| | | A | 1 | 4.000 | | 17.5 | | | | 1985 | 1985 | 433 | 0.218 | 0.218 | 296 | 0.149 | 0.149 |
| Road D3 (NB) | | B | 2 | 3.200 | 15 | | | | | 1760 | 1760 | 243 | 0.138 | | 251 | 0.143 | |
| | | B | 2 | 3.200 | 17.5 | | | 100% | 100% | 1910 | 1910 | 264 | 0.138 | 0.138 | 272 | 0.142 | |
| | | B | 2 | 3.200 | | | | | | 2075 | 2075 | 40 | 0.019 | | 19 | 0.009 | |
| | | B | 2 | 3.200 | | 12.5 | | 100% | 100% | 1855 | 1855 | 292 | 0.157 | | 237 | 0.128 | 0.128 |
| Road L12 (WB) | | C | 3 | 3.300 | 12.5 | | | | | 1735 | 1735 | 137 | 0.079 | 0.079 | 146 | 0.084 | |
| | | C | 3 | 3.300 | 15 | | | 73% | 64% | 1945 | 1960 | 154 | 0.079 | | 165 | 0.084 | |
| | | C | 3 | 3.300 | | 20 | | 27% | 12% | 2045 | 2065 | 161 | 0.079 | | 173 | 0.084 | 0.084 |
| Road D3 (SB) | | D | 4 | 4.000 | 12.5 | | | 98% | 101% | 1800 | 1800 | 31 | 0.017 | 0.017 | 28 | 0.016 | |
| | | D | 4 | 4.000 | | | | | | 2155 | 2155 | 13 | 0.006 | | 13 | 0.006 | |
| | | D | 4 | 4.000 | | 20 | | 0% | 0% | 2155 | 2155 | 14 | 0.006 | | 13 | 0.006 | 0.006 |

- In accordance with TPDM V4 - Road Traffic Signals

Formual of Total lost time per cycle L = ∑ (I - 1)

AM peak Group: A,B,C,D L = (6-1)+(6-1)+(7-1)+(7-1) = 22

PM peak Group: A,B,C,D L = (6-1)+(6-1)+(7-1)+(7-1) = 22

**Notes:**

**Flow: (pcu/hr)**

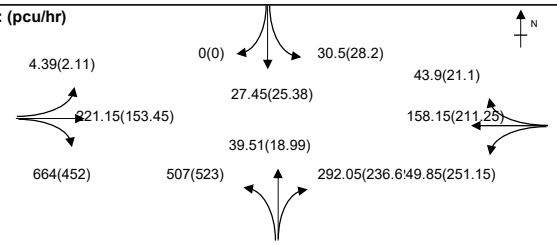


| Group | | A,B,C,D | Group | | A,B,C,D |
|---|---|---|---|---|---|
| y | | 0.435 | y | | 0.361 |
| L (sec) | | 22 | L (sec) | | 22 |
| C (sec) | | 90 | C (sec) | | 90 |
| y pract. | | 0.680 | y pract. | | 0.680 |
| R.C. (%) | | 56% | R.C. (%) | | 89% |

**Stage / Phase Diagrams**

**1.**

**2.**

**3.**

**4.**

**5.**

| | | | | | | | | | |
|---|---|---|---|---|---|---|---|---|---|
| I/G= 6 | | I/G= 6 | | I/G= 7 | | I/G= 7 | | I/G= | |
| I/G= 6 | | I/G= 6 | | I/G= 7 | | I/G= 7 | | I/G= | |

**Date:** AUG, 2025 **Junction:** (D) Road D3 - Road L11 - Road L12 (D)

# Simplified Priority Junction Capacity Calculation

| | | | |
|---|---|---|---|
| Job Title: | Elderly Home in Lot DD101 76 S.G. & 76 S.H. in Mai Po | | |
| Junction: | Castle Peak Road - Kwu Tung Road (E) | Designed by: | GTL |
| Scheme: | Observed Flow | Checked by: | JPP |
| Design Year: 2031 | Job No.: CHK50769410 | Date: | Feb-24 |
| Arm A: | Castle Peak Road(WB) | | |
| Arm B: | Kwu Tung Road | | |
| Arm C: | Castle Peak Road(EB) | | |

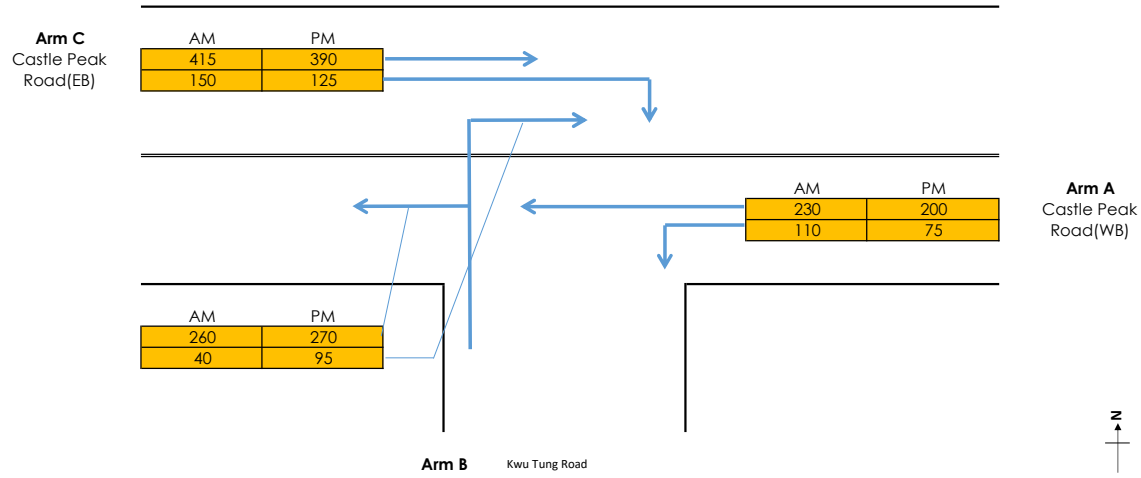


**GEOMETRY**

| | | | | | |
|---|---|---|---|---|---|
| Major Road Width (m) | W | 6.50 | Lane widths (m) | w(b-a) | 4.29 |
| Central Reserve Width (m) | Wcr | 0.00 | | w(b-c) | 4.00 |
| Blockage of major road right turn | Y/N? | Y | | w(c-b) | 3.25 |
| Combined stream on minor arm | Y/N? | N | | | |
| Visibility Distances (m) | Vr(b-a) | 36 | Calculated | D | 0.9059 |
| | Vl(b-a) | 24 | Parameters | E | 0.9622 |
| | Vr(b-c) | 44 | | F | 1.0317 |
| | Vr(c-b) | 200 | | Y | 0.7758 |

| **ANALYSIS** | | **AM PEAK** | **PM PEAK** |
|---|---|---|---|
| TRAFFIC FLOWS (pcu/hr) | q(c-a) | 415 | 390 |
| | q(c-b) | 150 | 125 |
| | q(a-b) | 110 | 75 |
| | q(a-c) | 230 | 200 |
| | q(b-a) | 40 | 95 |
| | q(b-c) | 260 | 270 |
| | f | 0.87 | 0.74 |
| CAPACITIES (pcu/hr) | Q(b-a) | 376.442 | 400.82 |
| | Q(b-c) | 642.558 | 654.47 |
| | Q(c-a) | 1396.75 | 1473.2 |
| | Q(c-b) | 669.562 | 688.5 |
| RFC's | c-a | 0.30 | 0.26 |
| | c-b | 0.22 | 0.18 |
| | b-a | 0.11 | 0.24 |
| | b-c | 0.40 | 0.41 |
| **RFC** | | **0.40** | **0.41** |

Where Vl and Vr are visibility distances to the left or right of the respective streams
D = (1+0.094(w(b-a)-3.65))(1+0.0009(Vr(b-a)-120))(1+0.0006(Vl(b-a)-150))
E = (1+0.094(w(b-c)-3.65))(1+0.0009(Vr(b-c)-120))
F = (1+0.094(wc-b)-3.65))(1+0.0009(Vr(c-b)-120))
Y = 1-0.0345W
f = proportion of minor traffic turning left
Q(b-ac) = Q(b-c)*Q(b-a)/(1-f)*Q(b-c)+f*Q(b-a)  Capacity of combined streams

***All the above formulas are in accordance to T.P.D.M. Volume 2 Chapter 4 Appendix 1***

# Simplified Priority Junction Capacity Calculation

| | | | |
|---|---|---|---|
| Job Title: | Elderly Home in Lot DD101 76 S.G. & 76 S.H. in Mai Po | | |
| Junction: | Castle Peak Road - Kwu Tung Road (E) | Designed by: | GTL |
| Scheme: | Reference Flow | Checked by: | JPP |
| Design Year: 2031 | Job No.: 50769410 | Date: | May-25 |
| Arm A: | Castle Peak Road(WB) | | |
| Arm B: | Kwu Tung Road | | |
| Arm C: | Castle Peak Road(EB) | | |

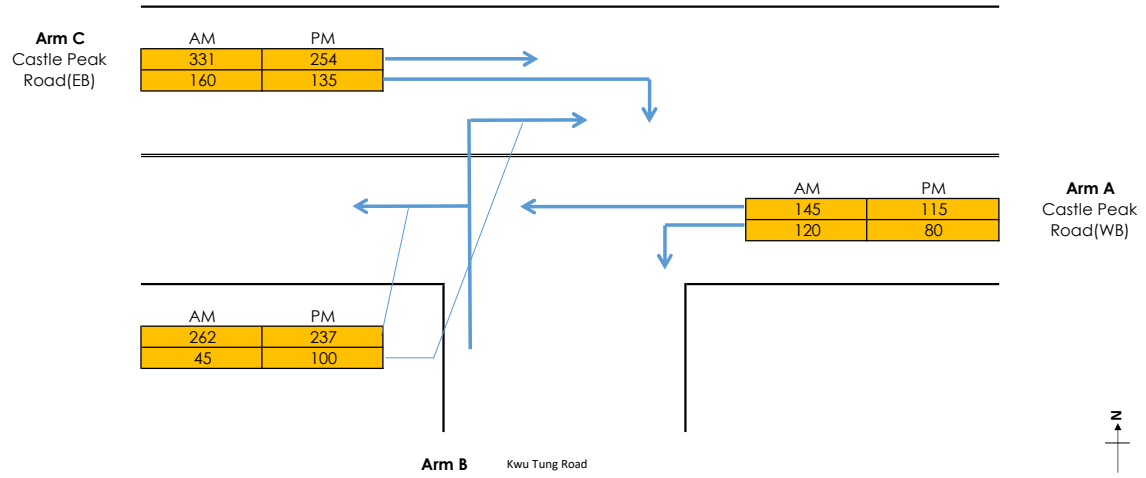


**GEOMETRY**

| | | | | | |
|---|---|---|---|---|---|
| Major Road Width (m) | W | 6.50 | Lane widths (m) | w(b-a) | 4.29 |
| Central Reserve Width (m) | Wcr | 0.00 | | w(b-c) | 4.00 |
| Blockage of major road right turn | Y/N? | Y | | w(c-b) | 3.25 |
| Combined stream on minor arm | Y/N? | N | | | |
| Visibility Distances (m) | Vr(b-a) | 36 | Calculated | D | 0.9059 |
| | Vl(b-a) | 24 | Parameters | E | 0.9622 |
| | Vr(b-c) | 44 | | F | 1.0317 |
| | Vr(c-b) | 200 | | Y | 0.7758 |

| **ANALYSIS** | | **AM PEAK** | **PM PEAK** |
|---|---|---|---|
| TRAFFIC FLOWS (pcu/hr) | q(c-a) | 330.7 | 254.3 |
| | q(c-b) | 160 | 135 |
| | q(a-b) | 120 | 80 |
| | q(a-c) | 145 | 115 |
| | q(b-a) | 45 | 100 |
| | q(b-c) | 261.9 | 236.5 |
| | f | 0.85 | 0.70 |
| CAPACITIES (pcu/hr) | Q(b-a) | 407.086 | 440.24 |
| | Q(b-c) | 664.579 | 677.03 |
| | Q(c-a) | 1383.46 | 1458.6 |
| | Q(c-b) | 691.411 | 711.8 |
| RFC's | c-a | 0.24 | 0.17 |
| | c-b | 0.23 | 0.19 |
| | b-a | 0.11 | 0.23 |
| | b-c | 0.39 | 0.35 |
| **RFC** | | **0.39** | **0.35** |

Where Vl and Vr are visibility distances to the left or right of the respective streams

D = (1+0.094(w(b-a)-3.65))(1+0.0009(Vr(b-a)-120))(1+0.0006(Vl(b-a)-150))

E = (1+0.094(w(b-c)-3.65))(1+0.0009(Vr(b-c)-120))

F = (1+0.094(wc-b)-3.65))(1+0.0009(Vr(c-b)-120))

Y = 1-0.0345W

f = proportion of minor traffic turning left

Q(b-ac) = Q(b-c)*Q(b-a)/(1-f)*Q(b-c)+f*Q(b-a)  Capacity of combined streams

***All the above formulas are in accordance to T.P.D.M. Volume 2 Chapter 4 Appendix 1***

# Simplified Priority Junction Capacity Calculation

| | | | |
|---|---|---|---|
| Job Title: | Elderly Home in Lot DD101 76 S.G. & 76 S.H. in Mai Po | | |
| Junction: | Castle Peak Road - Kwu Tung Road (E) | Designed by: | GTL |
| Scheme: | Design Flow | Checked by: | JPP |
| Design Year: 2028 | Job No.: 50769410 | Date: | May-25 |
| Arm A: | Castle Peak Road(WB) | | |
| Arm B: | Kwu Tung Road | | |
| Arm C: | Castle Peak Road(EB) | | |

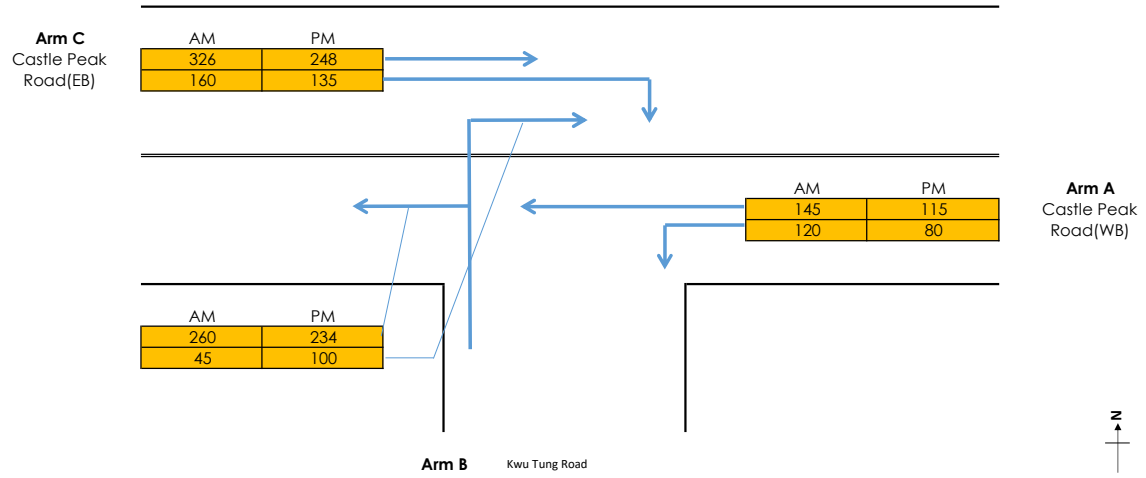


**GEOMETRY**

| | | | | | |
|---|---|---|---|---|---|
| Major Road Width (m) | W | 6.50 | Lane widths (m) | w(b-a) | 4.29 |
| Central Reserve Width (m) | Wcr | 0.00 | | w(b-c) | 4.00 |
| Blockage of major road right turn | Y/N? | Y | | w(c-b) | 3.25 |
| Combined stream on minor arm | Y/N? | N | | | |
| Visibility Distances (m) | Vr(b-a) | 36 | Calculated | D | 0.9059 |
| | Vl(b-a) | 24 | Parameters | E | 0.9622 |
| | Vr(b-c) | 44 | | F | 1.0317 |
| | Vr(c-b) | 200 | | Y | 0.7758 |

| **ANALYSIS** | | **AM PEAK** | **PM PEAK** |
|---|---|---|---|
| TRAFFIC FLOWS (pcu/hr) | q(c-a) | 325.7 | 248.3 |
| | q(c-b) | 160 | 135 |
| | q(a-b) | 120 | 80 |
| | q(a-c) | 145 | 115 |
| | q(b-a) | 45 | 100 |
| | q(b-c) | 259.9 | 233.5 |
| | f | 0.85 | 0.70 |
| CAPACITIES (pcu/hr) | Q(b-a) | 407.891 | 441.21 |
| | Q(b-c) | 664.579 | 677.03 |
| | Q(c-a) | 1383.46 | 1458.6 |
| | Q(c-b) | 691.411 | 711.8 |
| RFC's | c-a | 0.24 | 0.17 |
| | c-b | 0.23 | 0.19 |
| | b-a | 0.11 | 0.23 |
| | b-c | 0.39 | 0.34 |
| **RFC** | | **0.39** | **0.34** |

Where Vl and Vr are visibility distances to the left or right of the respective streams
D = (1+0.094(w(b-a)-3.65))(1+0.0009(Vr(b-a)-120))(1+0.0006(Vl(b-a)-150))
E = (1+0.094(w(b-c)-3.65))(1+0.0009(Vr(b-c)-120))
F = (1+0.094(wc-b)-3.65))(1+0.0009(Vr(c-b)-120))
Y = 1-0.0345W
f = proportion of minor traffic turning left
Q(b-ac) = Q(b-c)*Q(b-a)/(1-f)*Q(b-c)+f*Q(b-a)  Capacity of combined streams

***All the above formulas are in accordance to T.P.D.M. Volume 2 Chapter 4 Appendix 1***

# Simplified Priority Junction Capacity Calculation

| | | | |
|---|---|---|---|
| Job Title: | Elderly Home in Lot DD101 76 S.G. & 76 S.H. in Mai Po | | |
| Junction: | Shek Wu Wai Road - Slip Road from San Tin Highway (F) | Designed by: | CCT |
| Scheme: | Observed Flow | Checked by: | JPP |
| Design Year: 2031 | Job No.: CHK50769410 | Date: | May-25 |
| Arm A: | Shek Wu Wai Road (NB) | | |
| Arm B: | Slip Road from San Tin Highway (EB) | | |
| Arm C: | Shek Wu Wai Road (SB) | | |

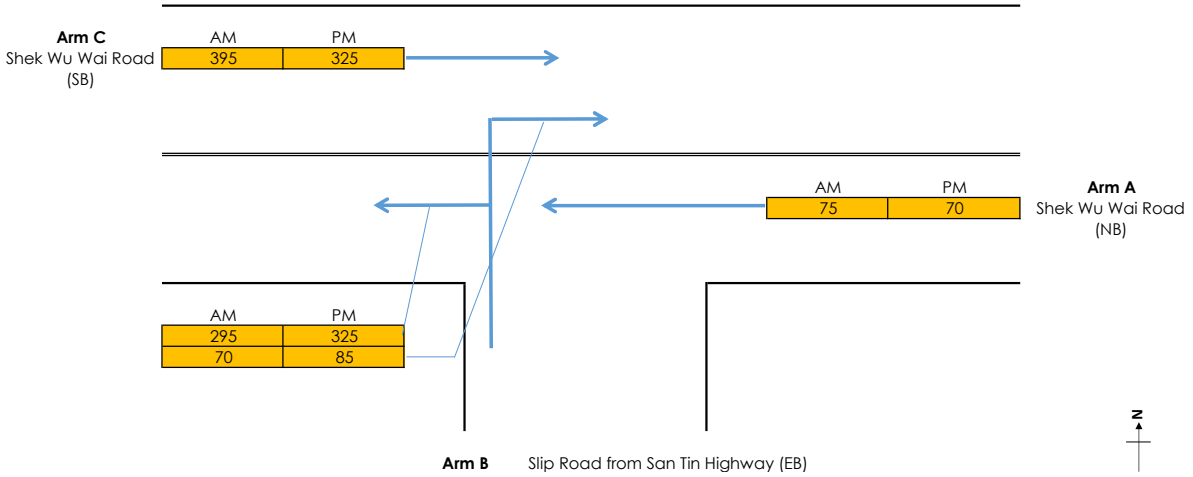


| GEOMETRY | | | | | |
|---|---|---|---|---|---|
| Major Road Width (m) | W | 10.50 | Lane widths (m) | w(b-a) | 4.63 |
| Central Reserve Width (m) | Wcr | 0.00 | | w(b-c) | 4.63 |
| Blockage of major road right turn | Y/N? | | | w(c-b) | 0.00 |
| Combined stream on minor arm | Y/N? | Y | | | |
| Visibility Distances (m) | Vr(b-a) | 25 | Calculated | D | 0.9334 |
| | Vl(b-a) | 41 | Parameters | E | 0.9987 |
| | Vr(b-c) | 25 | | F | 0.586 |
| | Vr(c-b) | | | Y | 0.6378 |

| ANALYSIS | | AM PEAK | PM PEAK |
|---|---|---|---|
| TRAFFIC FLOWS (pcu/hr) | q(c-a) | 395 | 325 |
| | q(c-b) | 0 | 0 |
| | q(a-b) | 0 | 0 |
| | q(a-c) | 75 | 70 |
| | q(b-a) | 70 | 85 |
| | q(b-c) | 295 | 325 |
| | f | 0.81 | 0.79 |
| CAPACITIES (pcu/hr) | Q(b-ac) | 673.632 | 674.13 |
| | Q(c-b) | 426.335 | 427.01 |
| RFC's | c-b | 0.00 | 0.00 |
| | b-ac | 0.54 | 0.61 |
| **RFC** | | **0.54** | **0.61** |

Where Vl and Vr are visibility distances to the left or right of the respective streams
D = (1+0.094(w(b-a)-3.65))(1+0.0009(Vr(b-a)-120))(1+0.0006(Vl(b-a)-150))
E = (1+0.094(w(b-c)-3.65))(1+0.0009(Vr(b-c)-120))
F = (1+0.094(wc-b)-3.65))(1+0.0009(Vr(c-b)-120))
Y = 1-0.0345W
f = proportion of minor traffic turning left
Q(b-ac) = Q(b-c)*Q(b-a)/(1-f)*Q(b-c)+f*Q(b-a)  Capacity of combined streams

***All the above formulas are in accordance to T.P.D.M. Volume 2 Chapter 4 Appendix 1***

# Simplified Priority Junction Capacity Calculation

| | | | |
|---|---|---|---|
| Job Title: | Elderly Home in Lot DD101 76 S.G. & 76 S.H. in Mai Po | | |
| Junction: | Shek Wu Wai Road / Mai Po Lung Road / Slip Road to San Tin Highway (G) | Designed by: | CCT |
| Scheme: | Observed Flow | Checked by: | JPP |
| Design Year: 2031 | Job No.: CHK50769410 | Date: | May-25 |
| Arm A: | Shek Wu Wai Road (SB) | | |
| Arm B: | Shek Wu Wai Road (WB) | | |
| Arm C: | Mai Po Lung Road (NB) | | |
| Arm D: | Slip Road to San Tin Highway (Exit only) | | |

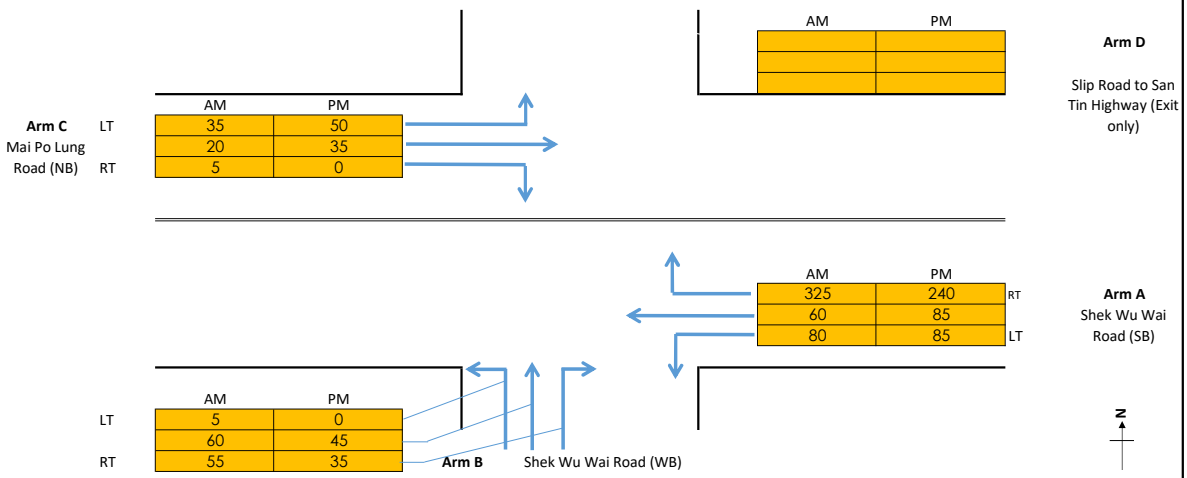


**GEOMETRY**

| | | |
|---|---|---|
| Major Road Width (m) | W | 9.61 |
| Central Reserve Width (m) | Wcr | 0.00 |

**Arm B**

| | | | | | |
|---|---|---|---|---|---|
| Lane widths (m) | w(b-a) | 2.77 | Blockage of major road RT (c-b block c-a)? | | Y |
| | w(b-c) | 2.77 | | | |
| | w(c-b) | 2.20 | Combined stream on minor arm B? | | Y |
| Visibility Distances (m) | Vr(b-a) | 26 | Calculated Parameters | D | 0.8901 |
| | Vl(b-a) | 250 | | E | 0.8397 |
| | Vr(b-c) | 26 | | F | 0.7836 |
| | Vr(c-b) | 17 | | Y | 0.6685 |

**Arm D**

| | | | | | |
|---|---|---|---|---|---|
| Lane widths (m) | w(d-a) | | Blockage of major road RT (a-d block a-c)? | | N |
| | w(d-c) | | | | |
| | w(a-d) | 3.46 | Combined stream on minor arm D? | | |
| Visibility Distances (m) | Vr(d-c) | | Calculated Parameters | D | 0.5332 |
| | Vl(d-c) | | | E | 0.586 |
| | Vr(d-a) | | | F | 0.9114 |
| | Vr(a-d) | 40 | | Y | 0.6685 |

**ANALYSIS**

| | | AM Peak | PM Peak |
|---|---|---|---|
| TRAFFIC FLOWS (pcu/hr) | q(c-a) | 20 | 35 |
| | q(c-b) | 5 | 0 |
| | q(a-b) | 80 | 85 |
| | q(a-c) | 385 | 325 |
| | q(b-a) | 55 | 35 |
| | q(b-c) | 65 | 45 |
| | f | 0.54 | 0.56 |
| CAPACITIES (pcu/hr) | Q(b-ac) | 502.3 | 515.91 |
| | Q(c-a) | 1781.8 | 1800 |
| | Q(c-b) | 495.1 | 505.63 |
| RFC's | c-a | 0.01 | 0.02 |
| | c-b | 0.01 | 0.00 |
| | b-ac | 0.24 | 0.16 |
| **RFC** | | **0.58** | **0.43** |

| | | AM Peak | PM Peak |
|---|---|---|---|
| TRAFFIC FLOWS (pcu/hr) | q(a-c) | 60 | 85 |
| | q(a-d) | 385 | 285 |
| | q(c-d) | 35 | 50 |
| | q(c-a) | 25 | 35 |
| | q(d-c) | 0 | 0 |
| | q(d-a) | 0 | 0 |
| | f | N/A | N/A |
| CAPACITIES (pcu/hr) | Q(d-a) | 253.0 | 267.5 |
| | Q(d-c) | 431.0 | 428.7 |
| | Q(d-ac) | N/A | N/A |
| | Q(a-d) | 665.7 | 660.2 |
| | a-d | 0.58 | 0.43 |
| | d-a | 0.00 | 0.00 |
| | d-c | 0 | 0 |

Where Vl and Vr are visibility distances to the left or right of the respective streams

D = (1+0.094(w(b-a)-3.65))(1+0.0009(Vr(b-a)-120))(1+0.0006(Vl(b-a)-150))

E = (1+0.094(w(b-c)-3.65))(1+0.0009(Vr(b-c)-120))

F = (1+0.094(wc-b)-3.65))(1+0.0009(Vr(c-b)-120))

Y = 1-0.0345W

f = proportion of minor traffic turning left

Q(b-ac) = Q(b-c)*Q(b-a)/(1-f)*Q(b-c)+f*Q(b-a) Capacity of combined streams

***All the above formulas are in accordance to T.P.D.M. V.2.4 Appendix 1***

## TRAFFIC SIGNALS CALCULATION

**Job No.:** CHK50769410 **MVA HONG KONG LIMITED**

Junction: Shek Wu Wai Road / San Tin Highway Slip Road (F and G) Design Year: 2031

Description: Reference flows Designed By: CCT Checked By: JPP

| Approach | Movements | Phase | Stage | Width (m) | Radius (m) Left | Radius (m) Right | Gradient (%) | Pro. Turning (%) AM | Pro. Turning (%) PM | Revised Saturation Flow (pcu/hr) AM | Revised Saturation Flow (pcu/hr) PM | AM Peak Flow (pcu/hr) | AM Peak y Value | AM Peak Critical y | PM Peak Flow (pcu/hr) | PM Peak y Value | PM Peak Critical y |
|---|---|---|---|---|---|---|---|---|---|---|---|---|---|---|---|---|---|
| San Tin highway | | A | 1,2 | 3.650 | | 12.5 | | 100% | 100% | 1770 | 1770 | 37 | 0.021 | | 44 | 0.025 | |
| Slip Road (EB) | | A | 1,2 | 3.650 | | 10 | | | | 1845 | 1845 | 38 | 0.021 | | 46 | 0.025 | |
| San Tin highway | | B | 1 | 3.900 | | 10 | | | | 1865 | 1865 | 214 | 0.115 | 0.115 | 201 | 0.108 | 0.108 |
| Slip Road (WB) | | B | 1 | 3.900 | | 12.5 | | 95% | 97% | 1800 | 1795 | 206 | 0.114 | | 194 | 0.108 | |
| Shek Wu Wai | | C | 2,3 | 3.500 | | | | | | 1965 | 1965 | 150 | 0.076 | 0.076 | 164 | 0.083 | 0.083 |
| Road (SB) | | C | 2,3 | 3.500 | | 15 | | 100% | 90% | 1915 | 1930 | 198 | 0.104 | | 161 | 0.083 | |
| | | C | 2,3 | 3.500 | | 12.5 | | | | 1880 | 1880 | 194 | 0.103 | | 157 | 0.084 | |
| Shek Wu Wai | | D | 4 | 3.500 | | | | | | 1965 | 1965 | 203 | 0.103 | | 196 | 0.100 | |
| Road (NB) | | D | 4 | 3.500 | | 15 | | 0% | 0% | 2105 | 2105 | 217 | 0.103 | 0.103 | 209 | 0.099 | |
| | | D | 4 | 3.500 | | 12.5 | | | | 1880 | 1880 | 15 | 0.008 | | 20 | 0.011 | 0.011 |
| Shek Wu Wai | | E | 3 | 3.500 | | | | | | 2105 | 2105 | 159 | 0.076 | | 135 | 0.064 | |
| Road (SB) | | E | 3 | 3.500 | | | | | | 2105 | 2105 | 159 | 0.076 | | 136 | 0.064 | |
| | | E | 3 | 3.500 | | | | | | 1965 | 1965 | 149 | 0.076 | | 126 | 0.064 | |
| Shek Wu Wai | | F | 4 | 3.500 | | | | | | 1965 | 1965 | 8 | 0.004 | | 13 | 0.007 | |
| Road (NB) | | F | 4 | 3.500 | | | | | | 2105 | 2105 | 8 | 0.004 | | 13 | 0.006 | |
| | | F | 4 | 3.500 | | | | | | 2105 | 2105 | 9 | 0.004 | | 14 | 0.007 | |

- In accordance with TPDM V4 - Road Traffic Signals

Formual of Total lost time per cycle L = ∑ (I - 1)

| | | | | | | | |
|---|---|---|---|---|---|---|---|
| AM peak | Group: | B,C,D | L | = | (6-1)+(8-1)+(5-1) | = | 16 |
| PM peak | Group: | B,C,D | L | = | (6-1)+(8-1)+(5-1) | = | 16 |

**Notes:**

**Flow: (pcu/hr)**

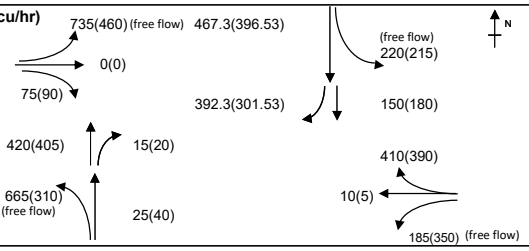


| Group | A,E,D | B,C,D | Group | B,C,D | B,C,D |
|---|---|---|---|---|---|
| y | 0.199 | 0.294 | y | 0.191 | 0.191 |
| L (sec) | 14 | 16 | L (sec) | 16 | 16 |
| C (sec) | 90 | 90 | C (sec) | 90 | 90 |
| y pract. | 0.760 | 0.740 | y pract. | 0.740 | 0.740 |
| R.C. (%) | 281% | 152% | R.C. (%) | 287% | 287% |

**Stage / Phase Diagrams**

**1.**

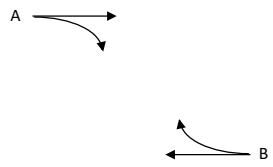


**2.**

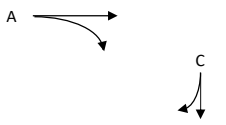


**3.**

**4.**

**5.**

| | | | | | | | |
|---|---|---|---|---|---|---|---|
| I/G= 5 | | I/G= 6 | | I/G= | | I/G= 8 | I/G= |
| I/G= 5 | | I/G= 6 | | I/G= | | I/G= 8 | I/G= |

**Date:** AUG, 2025 **Junction:** (F,G) Shek Wu Wai Road / San Tin Highway Slip Road (F and G)

## TRAFFIC SIGNALS CALCULATION

**Job No.:** CHK50769410 **MVA HONG KONG LIMITED**

Junction: Shek Wu Wai Road / San Tin Highway Slip Road (F and G) Design Year: 2031

Description: Design flows Designed By: CCT Checked By: JPP

| Approach | Movements | Phase | Stage | Width (m) | Radius (m) Left | Radius (m) Right | Gradient (%) | Pro. Turning (%) AM | Pro. Turning (%) PM | Revised Saturation Flow (pcu/hr) AM | Revised Saturation Flow (pcu/hr) PM | AM Peak Flow (pcu/hr) | AM Peak y Value | AM Peak Critical y | PM Peak Flow (pcu/hr) | PM Peak y Value | PM Peak Critical y |
|---|---|---|---|---|---|---|---|---|---|---|---|---|---|---|---|---|---|
| San Tin highway | | A | 1,2 | 3.650 | | 12.5 | | 100% | 100% | 1770 | 1770 | 37 | 0.021 | | 44 | 0.025 | |
| Slip Road (EB) | | A | 1,2 | 3.650 | | 10 | | | | 1845 | 1845 | 38 | 0.021 | | 46 | 0.025 | |
| San Tin highway | | B | 1 | 3.900 | | 10 | | | | 1865 | 1865 | 228 | 0.122 | 0.122 | 213 | 0.114 | 0.114 |
| Slip Road (WB) | | B | 1 | 3.900 | | 12.5 | | 95% | 98% | 1800 | 1795 | 219 | 0.122 | | 205 | 0.114 | |
| Shek Wu Wai | | C | 2,3 | 3.500 | | | | | | 1965 | 1965 | 150 | 0.076 | 0.076 | 164 | 0.083 | 0.083 |
| Road (SB) | | C | 2,3 | 3.500 | | 15 | | 100% | 90% | 1915 | 1930 | 198 | 0.104 | | 161 | 0.083 | |
| | | C | 2,3 | 3.500 | | 12.5 | | | | 1880 | 1880 | 194 | 0.103 | | 157 | 0.084 | |
| Shek Wu Wai | | D | 4 | 3.500 | | | | | | 1965 | 1965 | 216 | 0.110 | | 207 | 0.105 | |
| Road (NB) | | D | 4 | 3.500 | | 15 | | 0% | 0% | 2105 | 2105 | 231 | 0.110 | 0.110 | 221 | 0.105 | |
| | | D | 4 | 3.500 | | 12.5 | | | | 1880 | 1880 | 15 | 0.008 | | 20 | 0.011 | 0.011 |
| Shek Wu Wai | | E | 3 | 3.500 | | | | | | 2105 | 2105 | 159 | 0.076 | | 135 | 0.064 | |
| Road (SB) | | E | 3 | 3.500 | | | | | | 2105 | 2105 | 159 | 0.076 | | 136 | 0.064 | |
| | | E | 3 | 3.500 | | | | | | 1965 | 1965 | 149 | 0.076 | | 126 | 0.064 | |
| Shek Wu Wai | | F | 4 | 3.500 | | | | | | 1965 | 1965 | 8 | 0.004 | | 13 | 0.007 | |
| Road (NB) | | F | 4 | 3.500 | | | | | | 2105 | 2105 | 8 | 0.004 | | 13 | 0.006 | |
| | | F | 4 | 3.500 | | | | | | 2105 | 2105 | 9 | 0.004 | | 14 | 0.007 | |

- In accordance with TPDM V4 - Road Traffic Signals

Formual of Total lost time per cycle L = ∑ (I - 1)

| | | | | | | | |
|---|---|---|---|---|---|---|---|
| AM peak | Group: | B,C,D | L | = | (6-1)+(8-1)+(5-1) | = | 16 |
| PM peak | Group: | B,C,D | L | = | (6-1)+(8-1)+(5-1) | = | 16 |

**Notes:**

**Flow: (pcu/hr)**

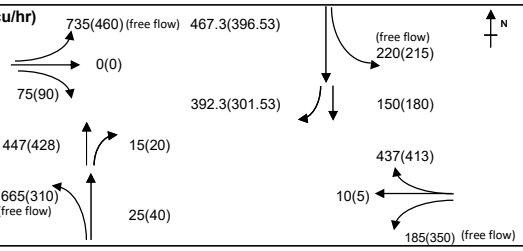


| Group | A,E,D | B,C,D | Group | B,C,D | B,C,D |
|---|---|---|---|---|---|
| y | 0.206 | 0.308 | y | 0.198 | 0.198 |
| L (sec) | 14 | 16 | L (sec) | 16 | 16 |
| C (sec) | 90 | 90 | C (sec) | 90 | 90 |
| y pract. | 0.760 | 0.740 | y pract. | 0.740 | 0.740 |
| R.C. (%) | 269% | 140% | R.C. (%) | 274% | 274% |

**Stage / Phase Diagrams**

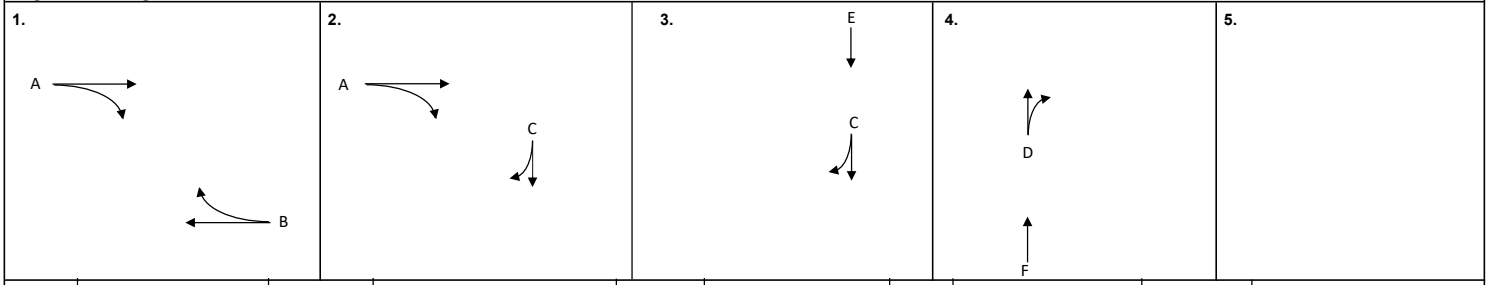


| | | | | | | | |
|---|---|---|---|---|---|---|---|
| I/G= 5 | | I/G= 6 | | I/G= | | I/G= 8 | I/G= |
| I/G= 5 | | I/G= 6 | | I/G= | | I/G= 8 | I/G= |

**Date:** AUG, 2025

**Junction:** (F,G) Shek Wu Wai Road / San Tin Highway Slip Road (F and G)

# Appendix B

# Swept Path Analysis

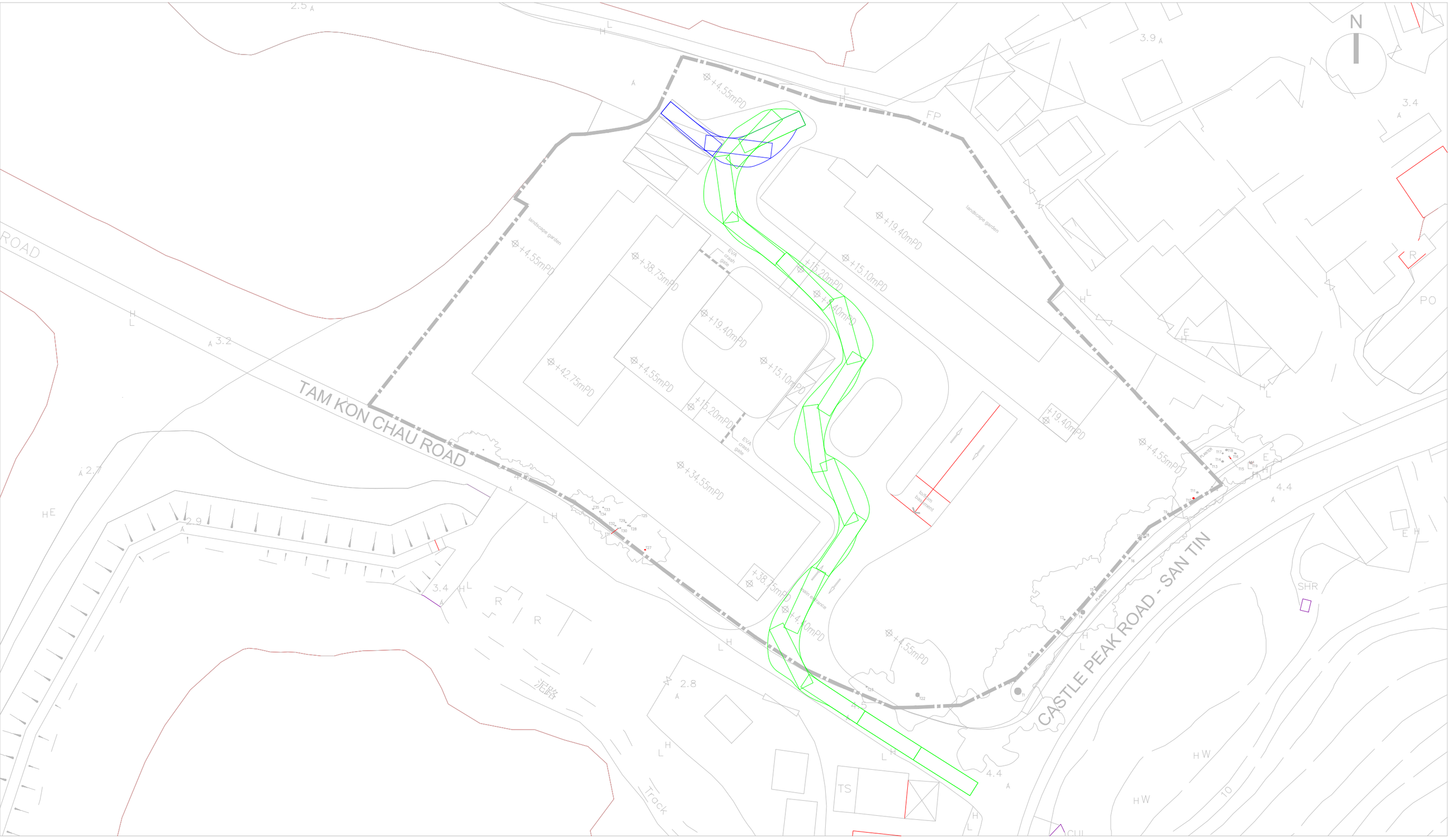
TAM KON CHAU ROAD
CASTLE PEAK ROAD - SAN TIN
landscape garden
landscape garden
EVA crash gate
EVA crash gate
+4.55mPD
+38.75mPD
+19.40mPD
+15.10mPD
+15.20mPD
+42.75mPD
+34.55mPD
+4.40mPD
+19.40mPD
+4.55mPD
+38.75mPD
+4.55mPD
+4.40mPD
+4.55mPD
+4.55mPD
turfcrete basement
turfcrete basement
main entrance
FP
PO
SHR
TS
泥路
Track
N
2.5
3.9
3.4
3.2
2.7
2.9
3.4
2.8
4.4
4.4
10

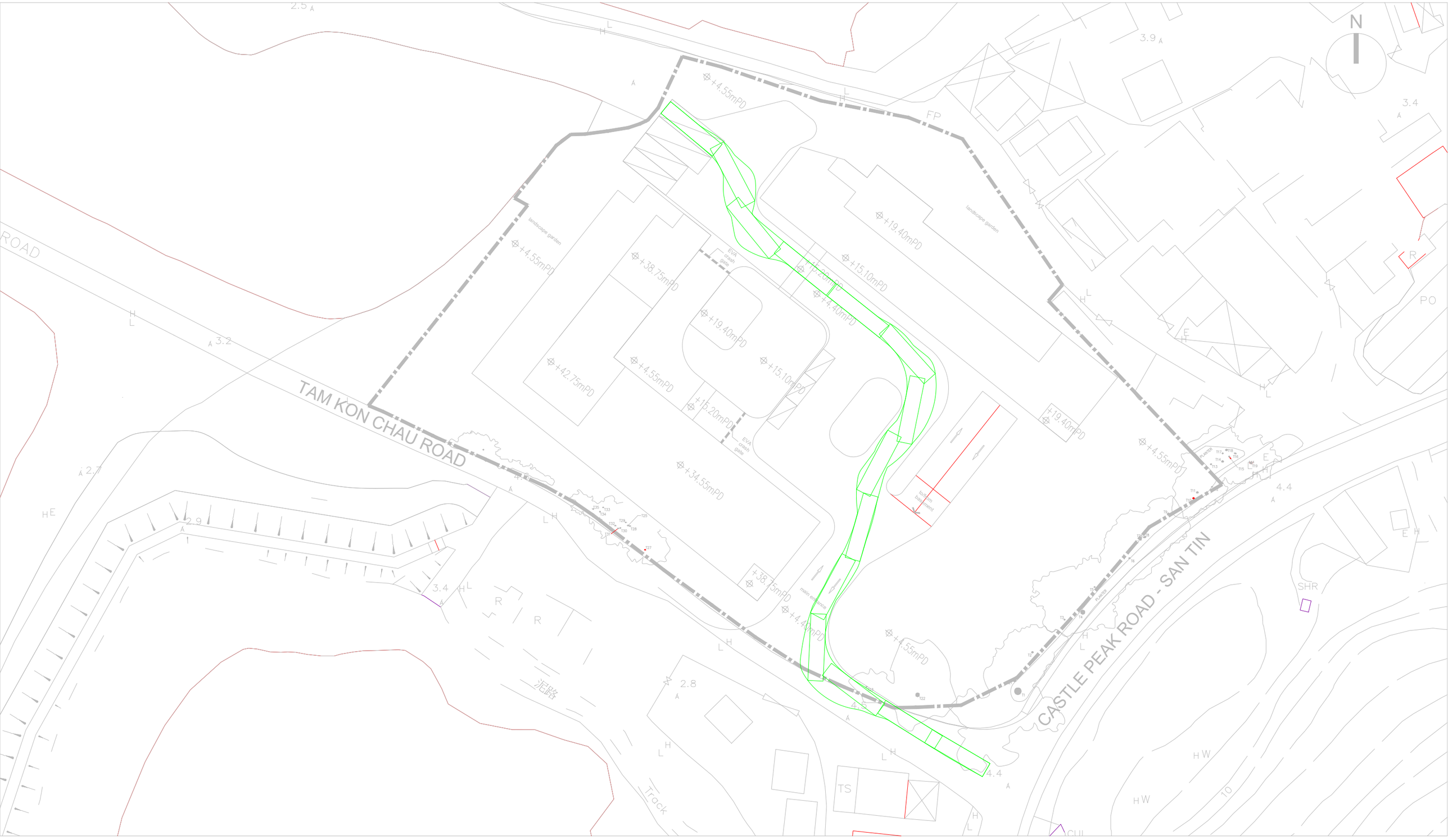
TAM KON CHAU ROAD
CASTLE PEAK ROAD - SAN TIN
landscape garden
landscape garden
main entrance
EVA crash gate
EVA crash gate
toilet/am block/ment
PLANTER
PLANTER
FP
FP
PO
SHR
TS
泥路
Track
N
+4.55mPD
+38.75mPD
+19.40mPD
+15.10mPD
+4.40mPD
+42.75mPD
+15.20mPD
+34.55mPD
+38.75mPD
+4.40mPD
+4.55mPD
+19.40mPD
+4.55mPD
+4.55mPD
2.5
3.9
3.4
3.2
2.7
2.9
3.4
2.8
4.5
4.4
4.4
10

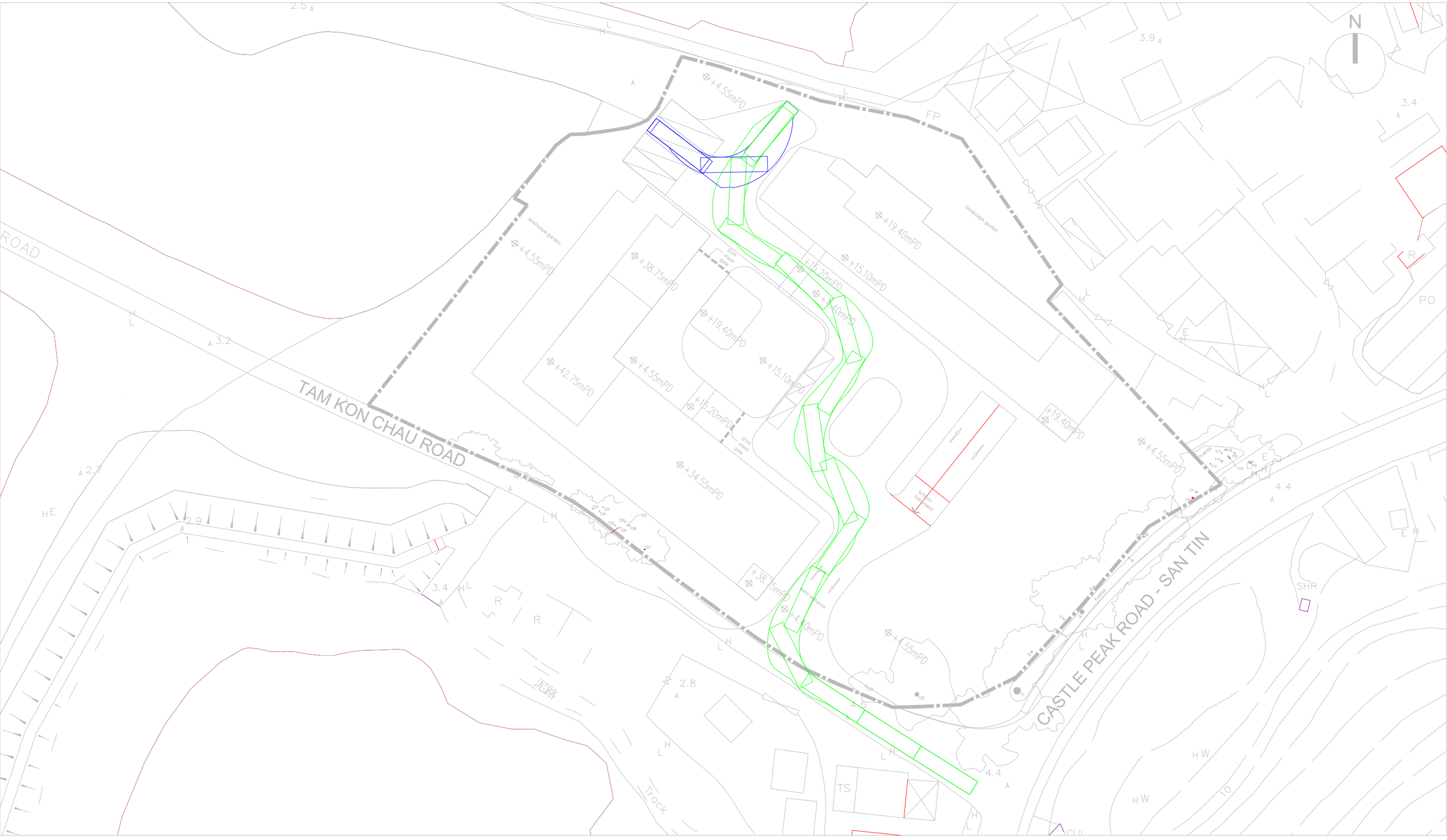
TAM KON CHAU ROAD
CASTLE PEAK ROAD - SAN TIN
landscape garden
landscape garden
EVA green gate
EVA green gate
+4.55mPD
+38.75mPD
+19.40mPD
+15.10mPD
+15.20mPD
+4.40mPD
+42.75mPD
+4.55mPD
+34.55mPD
+38.75mPD
+4.40mPD
+4.55mPD
+19.40mPD
+4.55mPD
+4.55mPD
+4.40mPD
turfcon basement
turfcon basement
main entrance
FP
PO
SHR
TS
Track
泥路
N

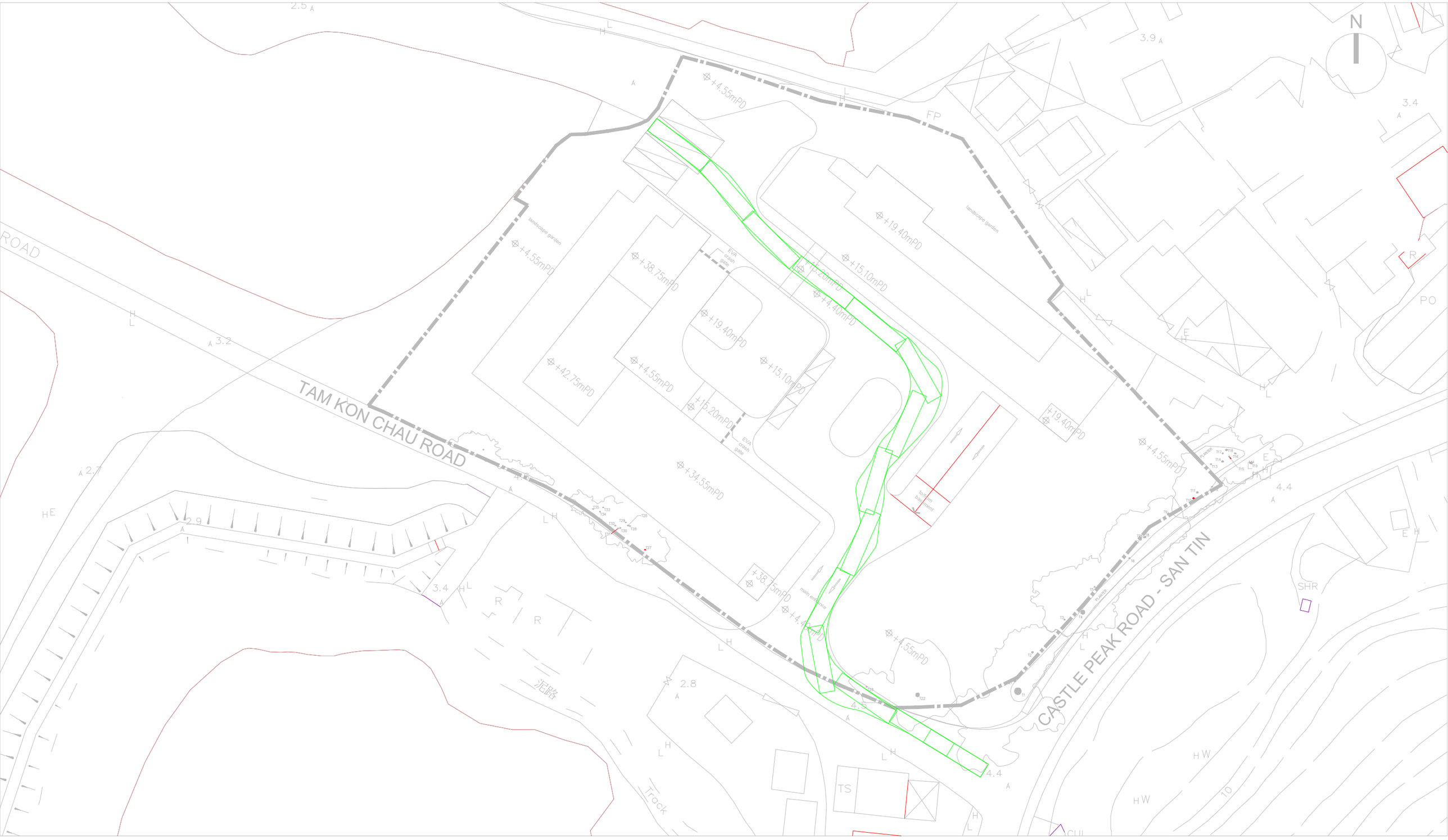
TAM KON CHAU ROAD
CASTLE PEAK ROAD - SAN TIN
ROAD
landscape garden
landscape garden
EVA crash gate
EVA crash gate
main entrance
toilet/am blockment
泥路
Track
PLANTER
PLANTER
FP
PO
SHR
TS
CUL
N
+4.55mPD
+19.40mPD
+15.10mPD
+4.40mPD
+38.75mPD
+42.75mPD
+4.55mPD
+15.20mPD
+34.55mPD
+38.75mPD
+4.55mPD
+4.55mPD
+19.40mPD
+4.55mPD
+4.40mPD
2.5
3.9
3.4
3.2
2.7
2.9
3.4
2.8
4.4
4.4
10

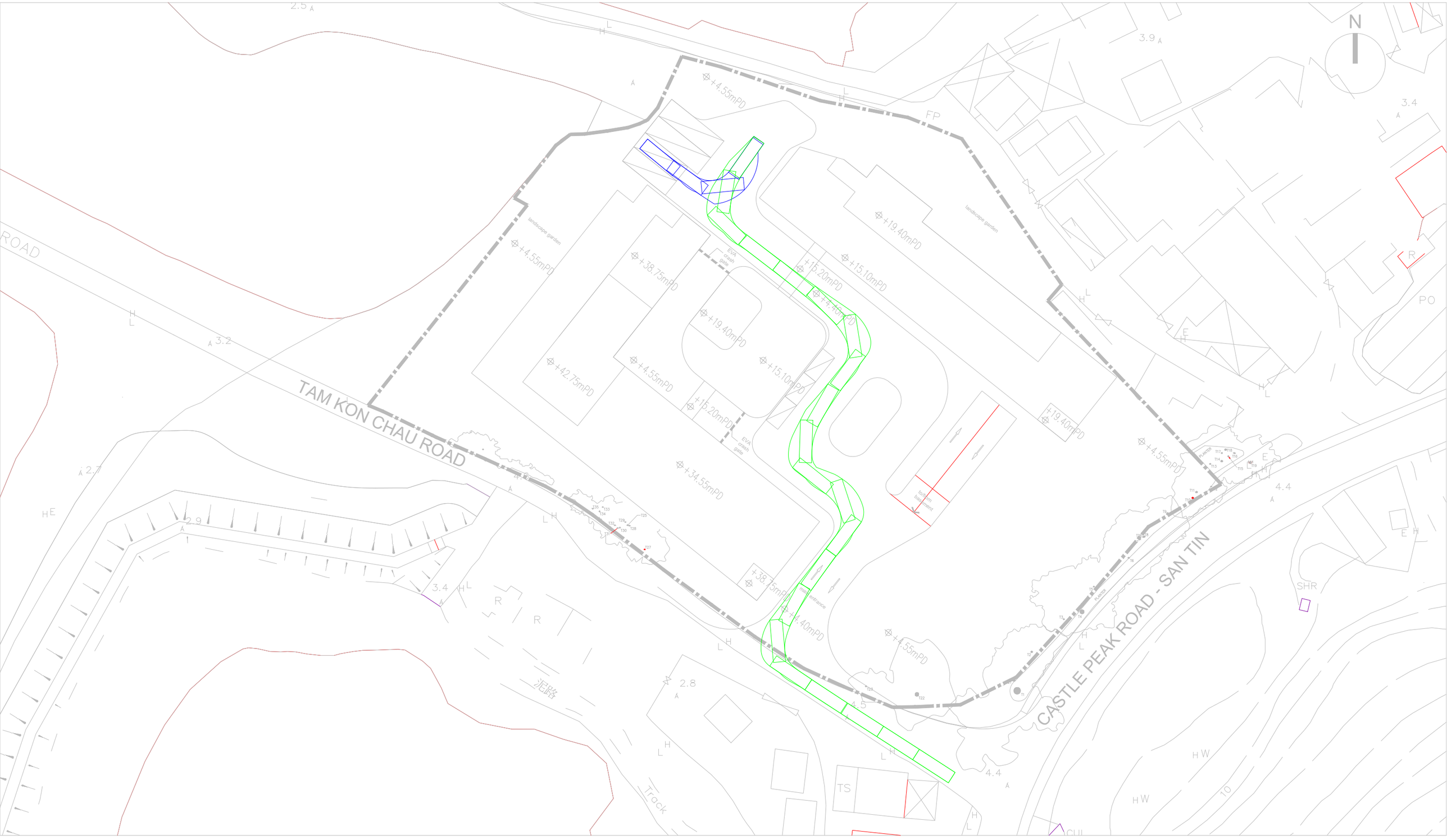
TAM KON CHAU ROAD
CASTLE PEAK ROAD - SAN TIN
landscape garden
landscape garden
+4.55mPD
+38.75mPD
+19.40mPD
+15.10mPD
+15.20mPD
+4.40mPD
+42.75mPD
+34.55mPD
+4.55mPD
+19.40mPD
+4.55mPD
+38.75mPD
+4.40mPD
+4.55mPD
EVA crash gate
EVA crash gate
FP
PO
SHR
TS
Track
泥路
N

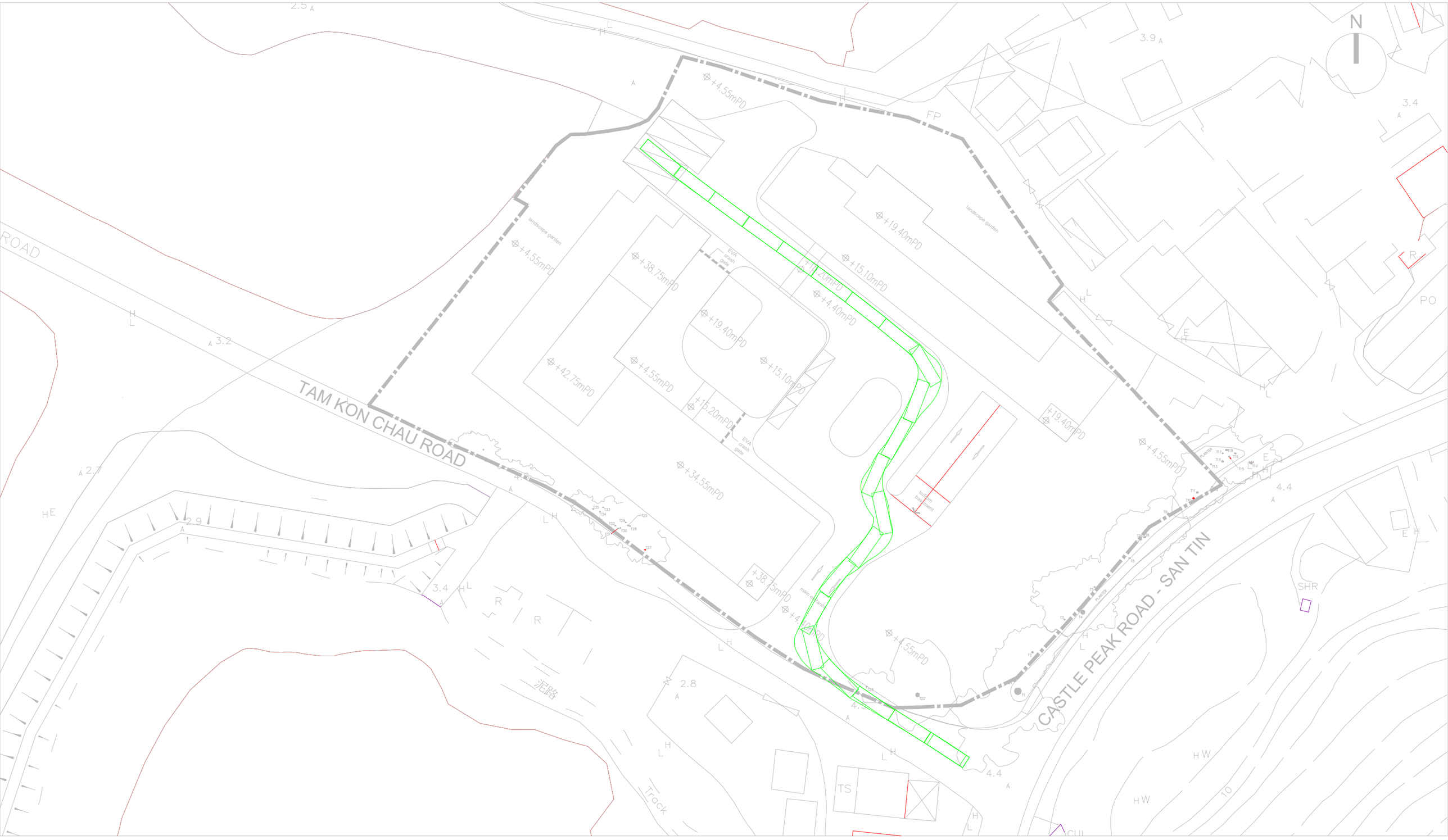
TAM KON CHAU ROAD
CASTLE PEAK ROAD - SAN TIN
ROAD
landscape garden
landscape garden
EVA crash gate
EVA crash gate
+4.55mPD
+38.75mPD
+19.40mPD
+15.10mPD
+4.40mPD
+42.75mPD
+4.55mPD
+15.20mPD
+34.55mPD
+38.75mPD
+4.20mPD
+4.55mPD
+19.40mPD
+4.55mPD
turfcrete treatment
main access
FP
泥路
Track
TS
SHR
PO
N
2.5
3.9
3.4
3.2
2.7
2.9
3.4
2.8
4.4
4.4
HW
HW
10

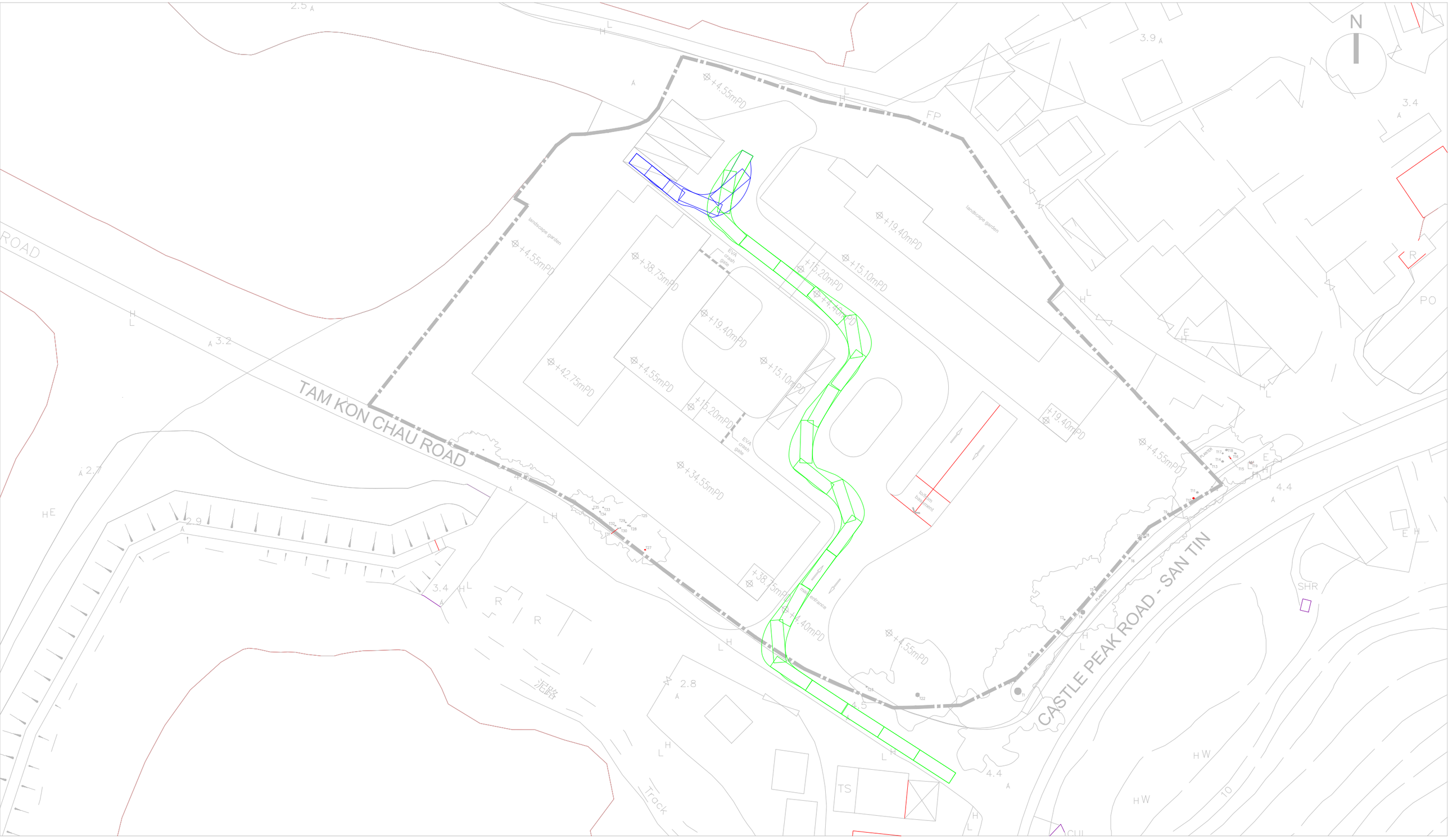
N
TAM KON CHAU ROAD
CASTLE PEAK ROAD - SAN TIN
landscape garden
landscape garden
EVA crash gate
EVA crash gate
+4.55mPD
+38.75mPD
+19.40mPD
+15.10mPD
+15.20mPD
+4.40mPD
+42.75mPD
+4.55mPD
+34.55mPD
+38.75mPD
+4.40mPD
+4.55mPD
+19.40mPD
+4.55mPD
FP
PO
SHR
TS
泥路
Track
2.5
3.9
3.4
3.2
2.7
2.9
3.4
2.8
4.5
4.4
4.4

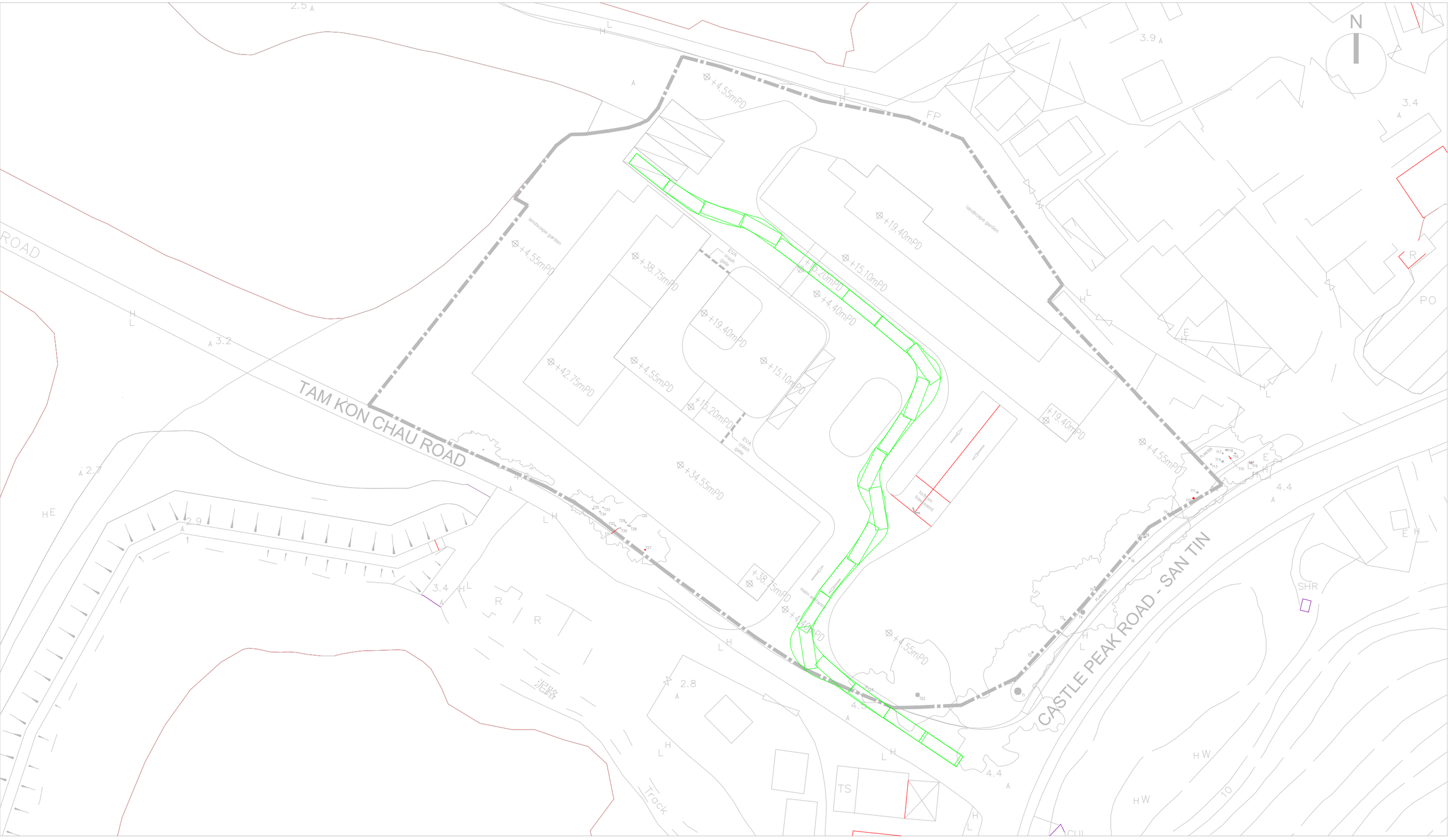
N
TAM KON CHAU ROAD
CASTLE PEAK ROAD - SAN TIN
ROAD
FP
+4.55mPD
+19.40mPD
+15.10mPD
+15.20mPD
+4.40mPD
+38.75mPD
+42.75mPD
+34.55mPD
landscape garden
EVA crash gate
turfcrete treatment
main entrance
泥路
Track
TS
SHR
PO
CUL
HW
3.9
3.4
3.2
2.9
2.8
2.7
4.4

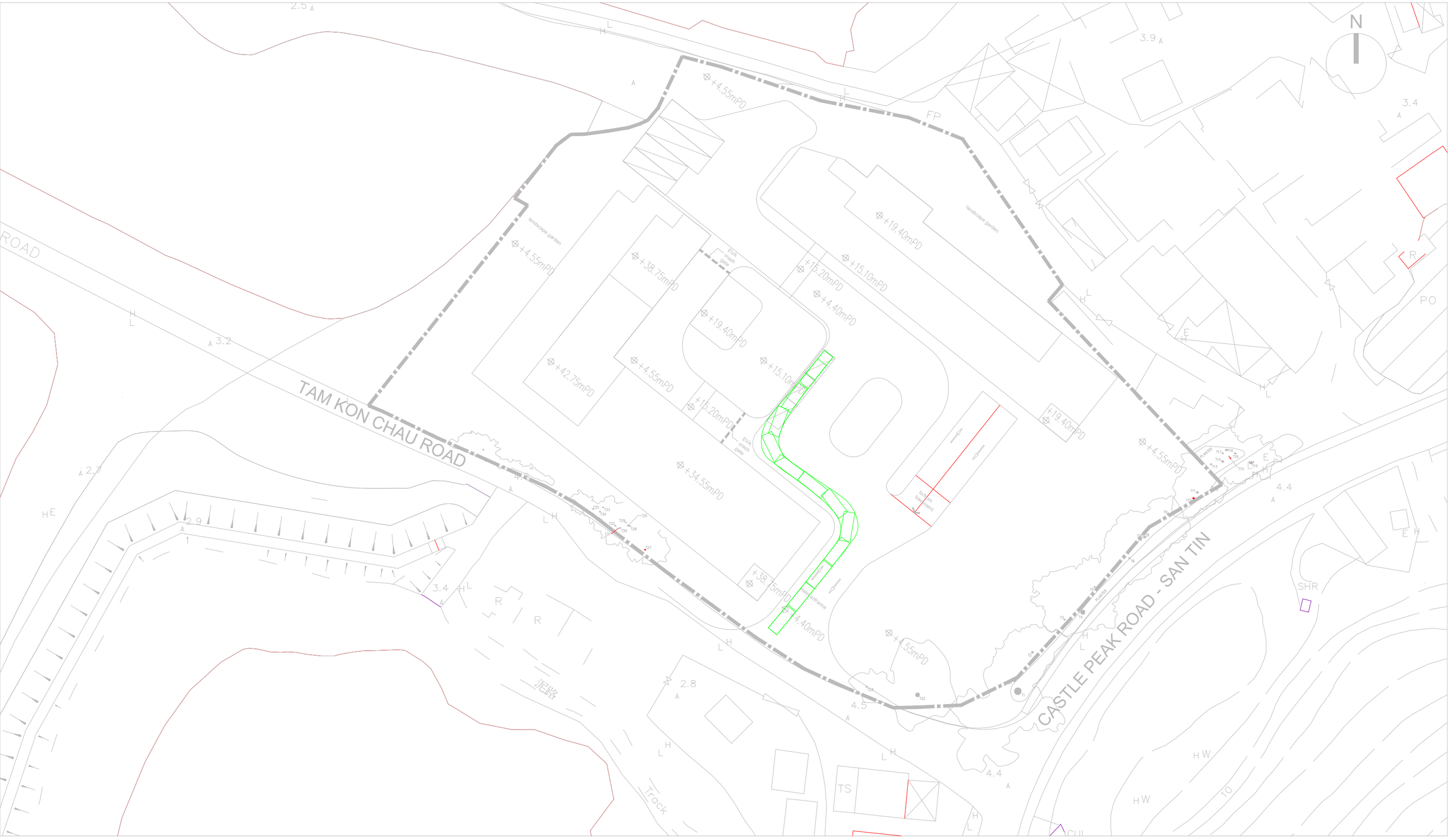
N
TAM KON CHAU ROAD
CASTLE PEAK ROAD - SAN TIN
FP
landscape garden
landscape garden
EVA crash gate
EVA crash gate
+4.55mPD
+38.75mPD
+19.40mPD
+15.20mPD
+15.10mPD
+4.40mPD
+42.75mPD
+4.55mPD
+34.55mPD
+38.75mPD
+4.40mPD
+19.40mPD
+4.55mPD
+4.55mPD
+4.55mPD
turfarm treatment
fill entrance
泥路
Track
TS
SHR
PO
2.5
3.9
3.4
3.2
2.7
2.9
3.4
2.8
4.5
4.4
4.4
10

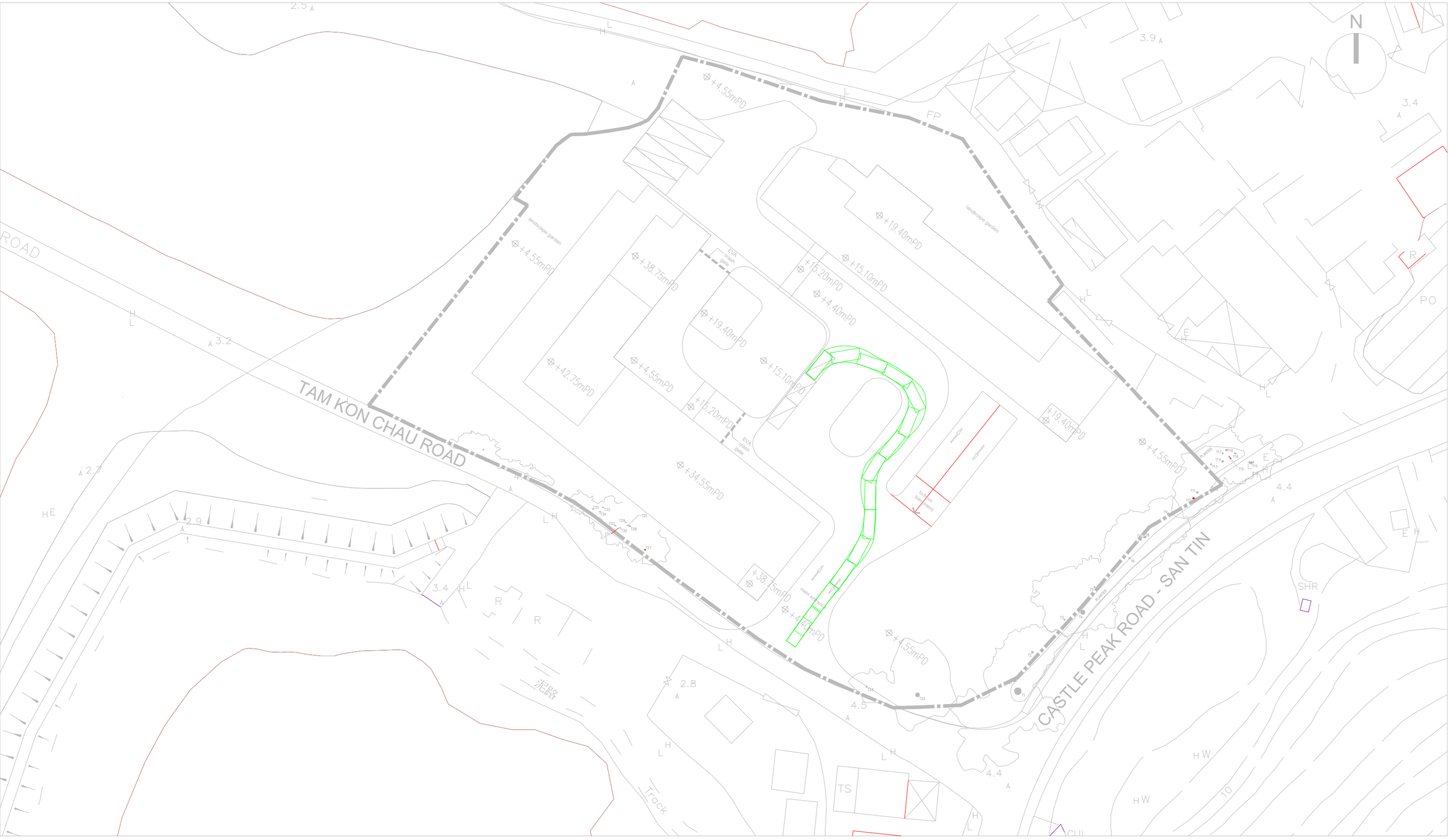
TAM KON CHAU ROAD
CASTLE PEAK ROAD - SAN TIN
landscape garden
landscape garden
+4.55mPD
+38.75mPD
+19.40mPD
+15.10mPD
+15.20mPD
+4.40mPD
+42.75mPD
+4.55mPD
+34.55mPD
+38.15mPD
+4.40mPD
+4.55mPD
+19.40mPD
+4.55mPD
EVA crash gate
EVA crash gate
main entrance
turnstile
turnstile
FP
PO
SHR
TS
泥路
Track
N
2.5
3.9
3.4
3.2
2.7
2.9
3.4
2.8
4.5
4.4
4.4
10

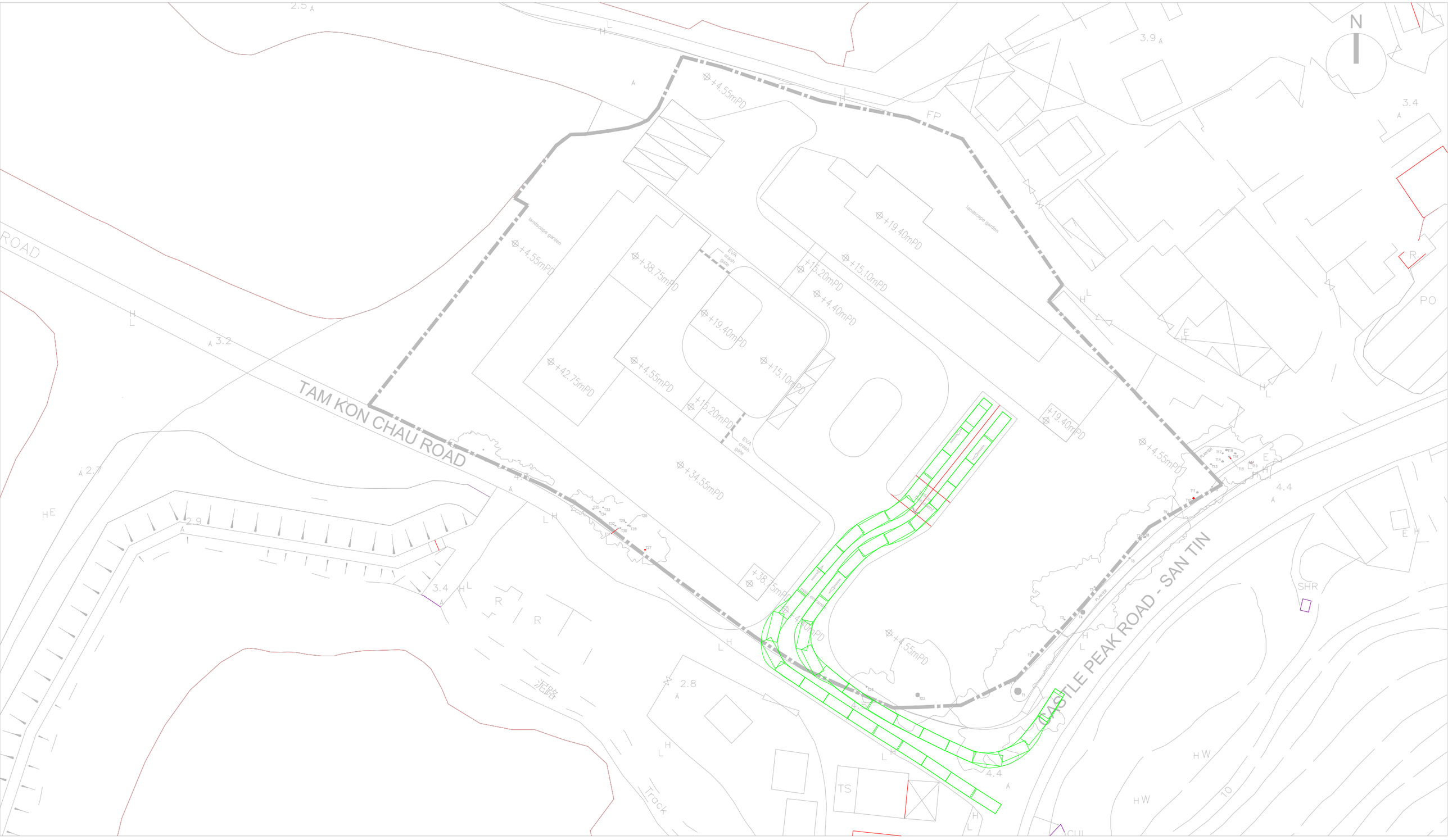
TAM KON CHAU ROAD
CASTLE PEAK ROAD - SAN TIN
landscape garden
landscape garden
EVA crash gate
EVA crash gate
+4.55mPD
+38.75mPD
+19.40mPD
+15.10mPD
+15.20mPD
+4.40mPD
+42.75mPD
+34.55mPD
+38.15mPD
+4.10mPD
+19.40mPD
FP
PO
SHR
泥路
Track
TS
CUL
N
2.5
3.9
3.4
3.2
2.7
2.9
2.8
4.4
10

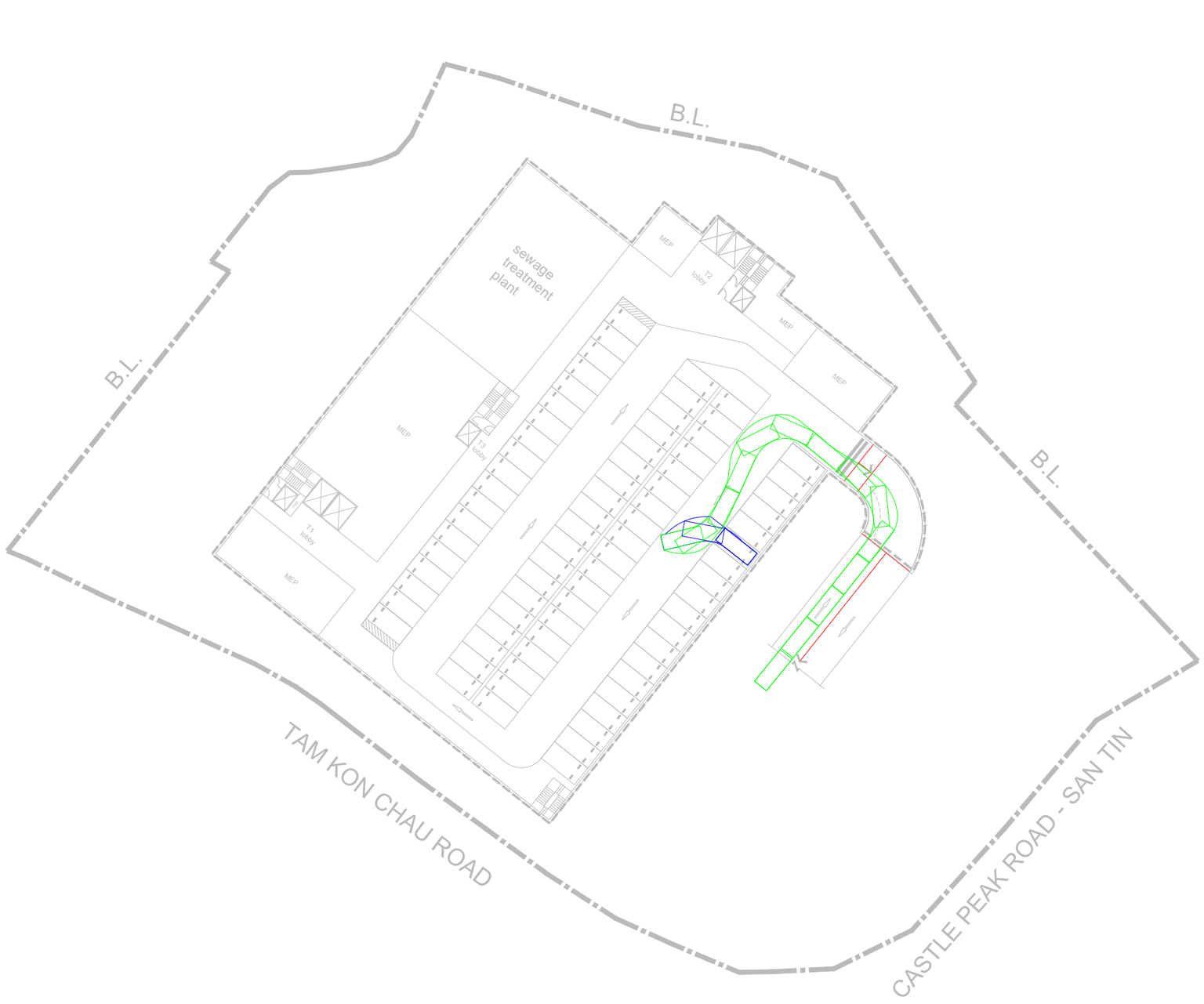
N
B.L.
B.L.
B.L.
sewage treatment plant
MEP
MEP
MEP
MEP
MEP
T1 lobby
T2 lobby
T3 lobby
TAM KON CHAU ROAD
CASTLE PEAK ROAD - SAN TIN

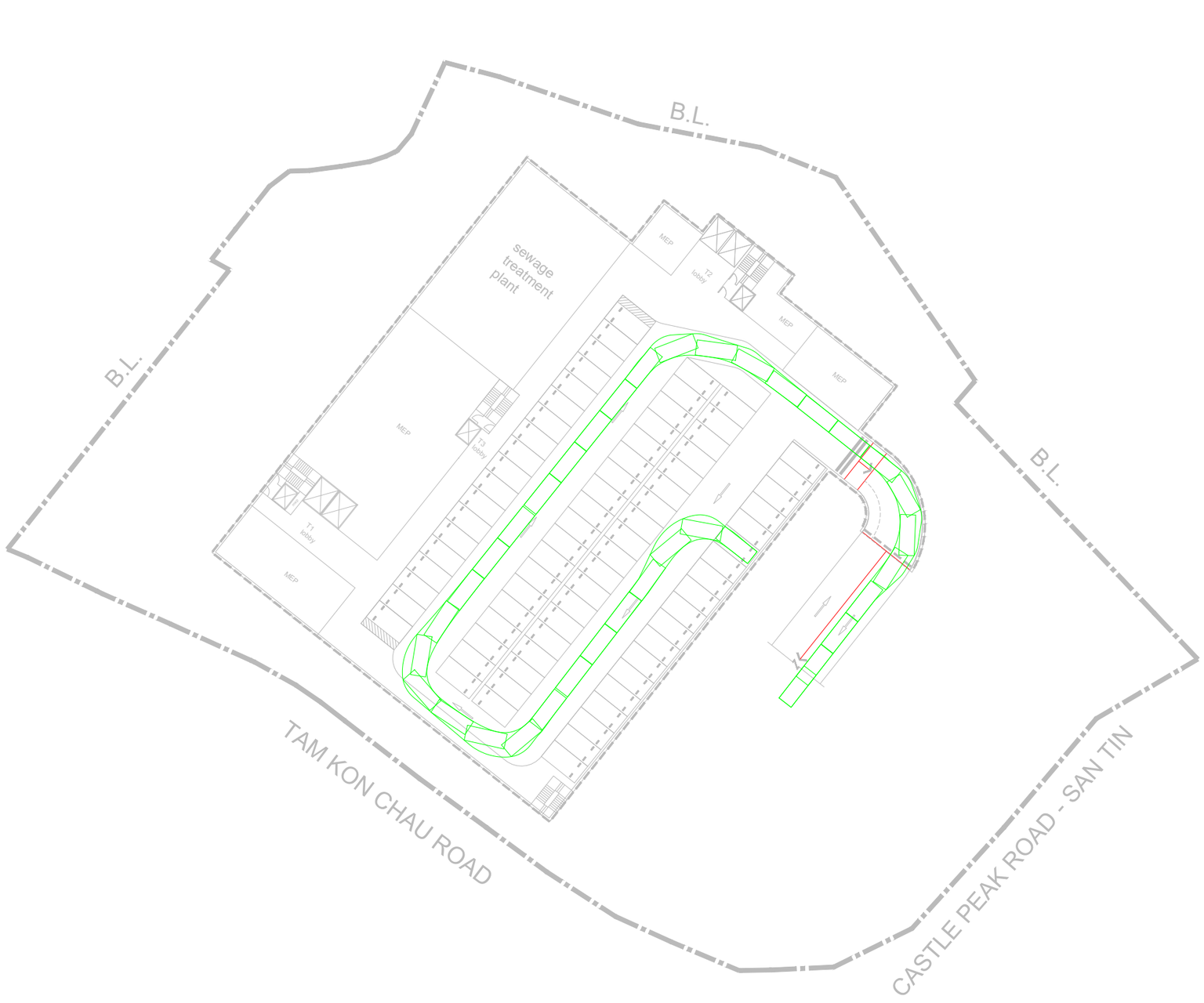
N
B.L.
B.L.
B.L.
sewage treatment plant
MEP
T2 lobby
MEP
MEP
T3 lobby
T1 lobby
MEP
TAM KON CHAU ROAD
CASTLE PEAK ROAD - SAN TIN

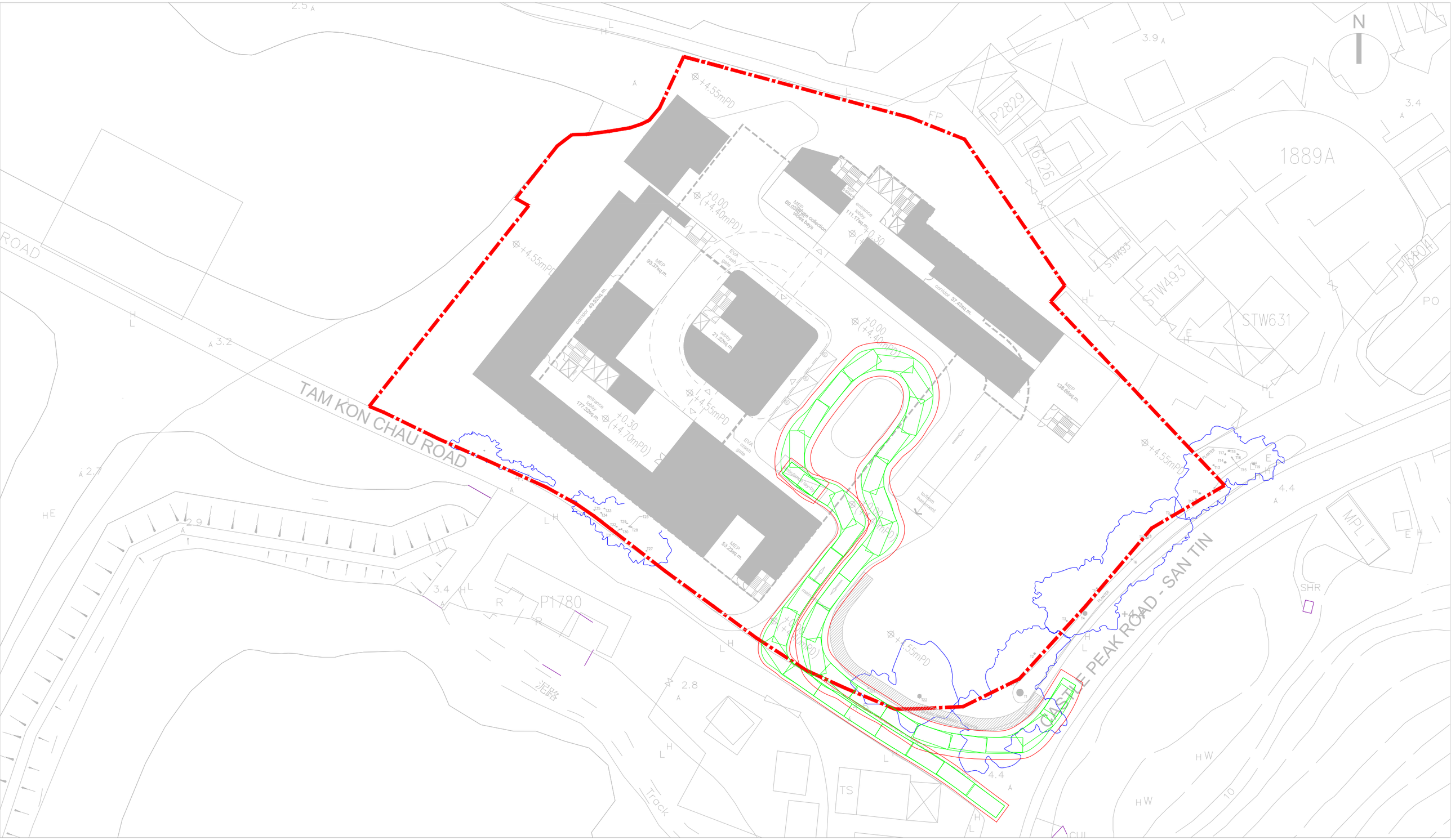
+4.55mPD
+0.00 (+4.40mPD)
+0.30 (+4.70mPD)
MEP 83.37sq.m.
corridor 49.82sq.m.
entrance lobby 177.32sq.m.
EVA crash gate
lobby 21.22sq.m.
MEP 53.23sq.m
MEP 60.03sq.m.
entrance lobby 111.17sq.m.
corridor 37.43sq.m.
MEP 138.86sq.m.
toilet
toilet basement
PLANTER
P2829
1626
STW493
STW493
STW631
1889A
P1780
MPL 1
SHR
TS
CUL
N
ROAD
TAM KON CHAU ROAD
CASTLE PEAK ROAD - SAN TIN
泥路
Track
HW
PO