Appendix 9

Noise Impact Assessment

SECTION 12A APPLICATION FOR AMENDMENT TO THE APPROVED KWAI CHUNG OUTLINE ZONING PLAN NO. S/KC/32 TO REZONE THE APPLICATION SITE FROM "OTHER SPECIFIED USES" ANNOTATED "BUSINESS" TO "RESIDENTIAL (GROUP E) 2", LOT 316 IN D.D. 444 AND KWAI CHUNG TOWN LOT (KTCL) 146, 97-107 WO YI HOP ROAD, NEW TERRITORIES

NOISE IMPACT ASSESSMENT REPORT

29 Jul 2025

Report No.: RT23055-NIA-01_v3

Prepared By:

BeeXergy Consulting Limited (BXG)
Phone: (852) 3568-4701
Address: Units 2501, 2503 & 2504, 25/F, AIA Financial Centre
712 Prince Edward Road East
Kowloon, Hong Kong
Email: info@beexergy.com

Project:	SECTION 12A APPLICATION FOR AMENDMENT TO THE APPROVED KWAI CHUNG OUTLINE ZONING PLAN NO. S/KC/32 TO REZONE THE APPLICATION SITE FROM "OTHER SPECIFIED USES" ANNOTATED "BUSINESS" TO "RESIDENTIAL (GROUP E) 2", LOT 316 IN D.D. 444 AND KWAI CHUNG TOWN LOT (KTCL) 146, 97-107 WO YI HOP ROAD, NEW TERRITORIES NOISE IMPACT ASSESSMENT REPORT
Report No.:	RT23055-NIA-01_v3

Revision	Issue Date	Description	Author	Checker	Approver
0	18/03/2024	Issued for Comment	RW	ZC	HM
1	05/04/2024	Issued for Comment	LY	YS	HM
2	09/05/2025	Issued for Comment	LY	YS	HM
3	29/07/2025	Issued for Comment	LY	YS	HM

Prepared By:

Leo Yu

Consultant

Checked by

Sui Hang Yan

Technical Director

Approved by:

Henry Mak

Director

Disclaimer:

- This report is prepared and submitted by BeeXergy Consulting Limited with all reasonable skill to the best of our knowledge, incorporating our Terms and Conditions and taking account of the resources devoted to it by agreement with the client.
- We disclaim any responsibility to the client and others in respect of any matters outside the project scope.
- This report is confidential to the client and we accept no responsibility of whatsoever nature to third parties to whom this report, or any part thereof, is made known. Any such party relies upon the report at their own risk.

TABLE OF CONTENT

FIGURES

APPENDICES

1. INTRODUCTION

1.1. BACKGROUND

1.1.1. Lai Sun Textiles Co. Ltd. (Project Proponent) proposes to rezone the Application Site from "Other Specified Uses" annotated "Business" to "Residential (Group E) 2", at Lot 316 in D.D. 444 and Kwai Chung Town Lot (KTCL) 146, 97-107 Wo Yi Hop Road, New Territories (hereafter refer to "the Proposed Development").

1.1.2. BeeXergy Consulting Limited was commissioned by the Project Proponent to undertake a Noise Impact Assessment (NIA) supporting its planning application under Section 12A of the Town Planning Ordinance (TPO) for the Proposed Development.

1.2. PROJECT LOCATION

1.2.1. The Application Site is located in Kwai Chung district, with a site area of approximately 2,764.8m^2. It is currently bounded by industrial buildings to the north and west, Wo Yi Hop Road to the east, and an office building to the south. The Application Site is currently zoned as "Other Specified Uses" annotated "Business" under the Approved Kwai Chung Outline Zoning Plan No. S/KC/32. **Figure 1.1** shows the location of Application Site and its environs.

1.3. PROJECT DESCRIPTION

1.3.1. The Proposed Development will convert the existing permitted uses to Residential Care Home for Persons with Disabilities (RCHD), Residential Care Home for the Elderly (RCHE) and flats. The key development parameters are summarised in **Table 1.1** and the Master Layout Plan provided by the Index Architecture Limited (the Project Architect) is enclosed in **Appendix 1.1**.

Table 1.1 Key Development Parameters of the Proposed Development

No. of Storeys	28 (excluding the basement floors)
Gross Floor Area (GFA)	Total: 16,589m^2 Flat: 16,458m^2 (excluding clubhouse area) Shop and Services: 131m^2 RCHD and/or RCHE: not more than 12,000m^2
Building Height	Not more than +130 mPD (87.6 m)
Proposed Floor Use	B1/F to LG1/F: Carpark G/F: Shared Use 1/F to 3/F: RCHD

Proposed Floor Use	4/F to 6/F: RCHE 7/F to 26/F: Flats
No. of Parking Spaces	74
Tentative Population Intake Year	2030
Proposed RCHD and/or RCHE	
Total No. of Beds	Within a range of 280-380
Proposed Flats	
Total No. of Flats	253

1.4. STRUCTURE OF THE REPORT

1.4.1. This NIA Report comprises the following sections:

- Section 1 introduces the project background;
- Section 2 presents the road traffic noise impact assessment;
- Section 3 presents the fixed noise impact assessment; and
- Section 4 summarizes the findings of this NIA.

2. ROAD TRAFFIC NOISE IMPACT ASSESSMENT

2.1. INTRODUCTION

2.1.1. The potential road traffic noise impact on the Proposed Development due to the nearby existing roads has been assessed. Practicable noise mitigation measures have been recommended, where necessary.

2.2. ASSESSMENT CRITERIA

2.2.1. Table 4.1 of Chapter 9 of the HKPSG provides the assessment criteria for road traffic noise impact at noise sensitive uses which rely on opened windows for ventilation. **Table 2.1** summarizes the adopted road traffic noise criteria for noise sensitive uses with openable windows at the Proposed Development.

Table 2.1 Road Traffic Noise Criteria for Noise Sensitive Uses

Location	Facility / Room	Noise Criteria, $L_{10\ (1\ hour)}$, dB(A)
G/F	RCHD Interview Room	70
G/F	RCHD Administration Section	70
G/F	RCHD Conference Room	70
1/F – 3/F	RCHD Dormitory	70
1/F – 2/F	RCHD Rehabilitation Area [3]	70
3/F – 4/F	Small Group Activity Room [3]	70
4/F – 6/F	RCHE Dormitory	70
6/F	RCHE Interview Room	70
1/F – 6/F	Dining Room/ Multipurpose Room [3]	70
1/F – 6/F	Nurse Station [2]	70
1/F – 6/F	Sick Bay with Negative Pressure [2]	70
7/F – 8/F	Residential Clubhouse	70
9/F – 26/F	Flat (Bedroom and Living Room)	70

Notes:

[1] The above standards apply to noise sensitive uses which rely on opened windows for ventilation and should be viewed as the maximum permissible noise levels assessed at 1m from the external façade.

[2] As advised by the Project Team, the Sick Bay with Negative Pressure is designated as an isolation room for infection control purposes. No medical operation and/or diagnostic activities will be carried out in the concerned room. Therefore, the noise planning standard of 70 dB(A) for domestic uses as stipulated in Table 4.1 of Chapter 9 of the HKPSG is adopted.

[3] As advised by the Project Team, the RCHD Rehabilitation Area will be used for physiotherapy, occupational therapy and multi-sensory treatments. No medical operation and/or diagnostic activities will be carried out in the concerned room. Therefore, the noise planning standard of 70 dB(A) for offices as stipulated in Table 4.1 of Chapter 9 of the HKPSG is adopted.

2.3. NOISE SENSITIVE RECEIVERS

2.3.1. Noise assessment points (NAPs) have been provided for noise sensitive uses with openable windows at the Proposed Development. The respective criteria for all types of noise sensitive uses with openable windows have been listed in **Table 2.1**. The locations of noise sensitive receivers (NSRs) for road traffic noise assessment are shown in **Figures 2.1a** to **2.1r**.

2.4. ASSESSMENT METHODOLOGY

2.4.1. The Road Noise Module 2.7.2 of NoiseMap Enterprise Edition has been used to assess the road traffic noise impact from the existing road network within 300m assessment area on the representative NSRs at the Proposed Development. The road traffic noise model adopts the methodology outlined in the Calculation of Road Traffic Noise (CRTN) developed by the UK Department of Transport. The road traffic noise would be presented in terms of noise levels exceeded for 10% of the one-hour period for the hour having the peak traffic flow $L_{10(1hour)}$ under various traffic forecast scenarios. Representative NAPs, key building structures with noise screening effects, topographical contours and road segments with traffic flow data have been inputted into the NoiseMap model in predicting the potential traffic noise impact.

2.4.2. Traffic flow of the existing roads within 300m assessment area have been forecasted by the Project traffic consultant. As stated in the CRTN, the traffic flow used for assessment shall be the maximum traffic projection within 15 years upon occupancy of the development. The assessment has been undertaken based on the projected AM peak hourly traffic flows in Year 2045, which corresponds to the maximum projected traffic conditions within 15 years upon occupancy of the Proposed Development, i.e. Year 2030. The traffic forecast data is enclosed in **Appendix 2.1**. The traffic forecasting methodology for producing the adopted traffic data has been submitted to the Transport Department (TD) for endorsement.

2.5. ASSESSMENT RESULTS – BASE CASE SCENARIO

2.5.1. Predicted peak hourly road traffic noise levels at the representative NSRs at the Proposed Development are summarized in **Table 2.2** below. Detailed breakdown of the road traffic noise assessment results under base case scenario are presented in **Appendix 2.2**.

Table 2.2 Summary of Predicted Road Traffic Noise Levels (Base Case Scenario)

Floor	Facility / Room	Noise Criteria, dB(A)	Predicted Maximum $L_{10\ (1\ hour)}$, dB(A)
G/F	RCHD Interview Room	70	58
G/F	RCHD Administration Section	70	58
G/F	RCHD Conference Room	70	59
1/F – 3/F	RCHD Dormitory	70	**78**
1/F – 2/F	RCHD Rehabilitation Area	70	**77**
3/F – 4/F	Small Group Activity Room	70	59
4/F – 6/F	RCHE Dormitory	70	**76**
6/F	RCHE Interview Room	70	58
1/F – 6/F	Dining Room/ Multipurpose Room	70	**77**
1/F – 6/F	Nurse Station	70	57
1/F – 6/F	Sick Bay with Negative Pressure	70	57
7/F – 8/F	Residential Clubhouse	70	**74**
9/F – 26/F	Flat (Bedroom and Living Room)	70	**74**

2.5.2. The assessment results revealed that the RCHD and RCHE dormitories, Dining Room/ Multipurpose Room, RCHD Rehabilitation Area, Residential Clubhouse and flats on the façade facing Wo Yi Hop Road would be with noise exceedances under the base case scenario. Mitigation measures would be required for the aforementioned areas to mitigate road traffic noise impact to the Proposed Development.

2.6. PROPOSED TRAFFIC NOISE MITIGATION MEASURES

Fixed Glazing with Maintenance Window

2.6.1. The use of fixed glazing coupled with mechanical ventilation as a standard provision is recommended for areas of the RCHD and RCHE dormitories, Dining Room/ Multipurpose Room, RCHD Rehabilitation Area, and Residential Clubhouse. The proposed locations of fixed glazing are indicated in **Figures 2.2g** and **2.2h**.

2.6.2. The fixed glazing will be provided with glass pane of minimum 10mm and to achieve minimum sound insulation performance of STC31. Hence, noise entering the rooms would be reduced to an acceptable level of indoor environment. The fixed glazing with maintenance window will be equipped with a removable handle or key lock system to

ensure the maintenance window remains locked except for cleaning and maintenance purposes.

Acoustic Window (Baffle Type) (Abbreviated as AW(BT))

2.6.3. A baffle type acoustic window system typically comprises outer window system and inner sliding panel. The setting of the system is that while the outer window is opened, the sliding panel should be shifted to behind the outer opening. The outer opening and inner opening (aside the sliding panel) are then on the opposite sides so that noise outdoors cannot penetrate directly into indoor area while air can pass through the gap between outer and inner glass pane such that natural ventilation is possible. With reference to "Practice Note on Application of INNOVATIVE NOISE MITIGATION DESIGNS in Planning Private Residential Developments against Road Traffic Noise Impact", the design of AW(BT) and corresponding noise reduction is shown in **Appendix 2.3**.

2.6.4. For the Proposed Development, the outer opening will be designed to be equal to or smaller than the reference cases so that the transmission loss of the AW(BT) of the project case should be better or at least the same as the Practice Note. It is understood that the room size would also affect the sound attenuation performance. A conservative approach is adopted by adjusting the sound attenuation based on the relative room size of the project case and reference case. The sound attenuation is adjusted (downward only) based on the ratio of the room size of the project case and the reference case in order to reflect the difference in the base case (using conventional window). On the other hand, in case the room size of the project case is larger than the reference case or opening size of the conventional window in the project case is smaller than the reference case, no adjustment is made as a conservative approach. **Appendix 2.3** shows the estimated sound attenuation of the proposed AW(BT) with respect to different habitable rooms at the Proposed Development. The proposed locations of AW(BT) are indicated in **Figures 2.2a** to **2.2q**.

2.7. ASSESSMENT RESULTS – MITIGATED SCENARIO

2.7.1. The Noise Mitigation Measures for Proposed Development is summarized in **Table 2.3**. With the implementation of the proposed noise mitigation measures, the predicted road traffic noise levels under the mitigated scenario are summarized in **Table 2.4** below and detailed in **Appendix 2.4**. Under the mitigated scenario, 100% compliance rate could be achieved and thus no adverse road traffic noise impact on the Proposed Development is anticipated.

Table 2.3 Summary of Proposed Noise Mitigation Measures

NSR	Location	Proposed Noise Mitigation Measures
1F_N15	RCHD Dormitory	Fixed Glazing
1F_N16	RCHD Dormitory	Fixed Glazing
1F_N17	RCHD Rehabilitation Area	Fixed Glazing
1F_N18	RCHD Rehabilitation Area	Fixed Glazing
2F_N14	RCHD Rehabilitation Area	Fixed Glazing
2F_N15	RCHD Dining Room/ Multiprupose Room	Fixed Glazing
2F_N16	RCHD Dining Room/ Multiprupose Room	Fixed Glazing
2F_N17	RCHD Rehabilitation Area	Fixed Glazing
3F_N18	RCHD Dormitory	Fixed Glazing
3F_N19	RCHD Dormitory	Fixed Glazing
3F_N20	RCHD Dormitory	Fixed Glazing
3F_N21	RCHD Dormitory	Fixed Glazing
3F_N22	RCHD Dormitory	Fixed Glazing
3F_N23	RCHD Dining Room/ Multiprupose Room	Fixed Glazing
4F_N12	RCHE Dormitory	Fixed Glazing
4F_N13	RCHE Dormitory	Fixed Glazing
4F_N14	RCHE Dormitory	Fixed Glazing
4F_N15	RCHE Dormitory	Fixed Glazing
4F_N16	RCHE Dormitory	Fixed Glazing
4F_N17	RCHE Dormitory	Fixed Glazing
4F_N18	RCHE Dormitory	Fixed Glazing
4F_N19	RCHE Dormitory	Fixed Glazing
4F_N20	RCHD Dining Room/ Multiprupose Room	Fixed Glazing
5F_N11	RCHE Dormitory	Fixed Glazing
5F_N12	RCHE Dormitory	Fixed Glazing
5F_N13	RCHE Dormitory	Fixed Glazing
5F_N14	RCHE Dormitory	Fixed Glazing
5F_N15	RCHE Dormitory	Fixed Glazing
5F_N16	RCHE Dormitory	Fixed Glazing
5F_N17	RCHE Dormitory	Fixed Glazing
5F_N18	RCHE Dormitory	Fixed Glazing
5F_N19	RCHD Dining Room/ Multiprupose Room	Fixed Glazing
6F_N12	RCHE Dormitory	Acoustic Window (Baffle Type)
6F_N13	RCHE Dormitory	Acoustic Window (Baffle Type)
6F_N14	RCHE Dormitory	Acoustic Window (Baffle Type)
6F_N15	RCHE Dormitory	Acoustic Window (Baffle Type)
6F_N16	RCHE Dormitory	Acoustic Window (Baffle Type)
6F_N17	RCHE Dormitory	Acoustic Window (Baffle Type)
6F_N18	RCHE Dormitory	Acoustic Window (Baffle Type)
7F_N08	Residential Clubhouse	Fixed Glazing
7F_N09	Residential Clubhouse	Fixed Glazing
8F_N08	Residential Clubhouse	Fixed Glazing
8F_N09	Residential Clubhouse	Fixed Glazing
8F_N10	Residential Clubhouse	Fixed Glazing
9F_N34	Flat - Bedroom	Acoustic Window (Baffle Type)
9F_N35	Flat - Bedroom	Acoustic Window (Baffle Type)
9F_N36	Flat - Bedroom	Acoustic Window (Baffle Type)

NSR	Location	Proposed Noise Mitigation Measures
9F_N37	Flat - Living Room	Acoustic Window (Baffle Type)
10F_N34	Flat - Bedroom	Acoustic Window (Baffle Type)
10F_N35	Flat - Bedroom	Acoustic Window (Baffle Type)
10F_N36	Flat - Bedroom	Acoustic Window (Baffle Type)
10F_N37	Flat - Living Room	Acoustic Window (Baffle Type)
11F_N34	Flat - Bedroom	Acoustic Window (Baffle Type)
11F_N35	Flat - Bedroom	Acoustic Window (Baffle Type)
11F_N36	Flat - Bedroom	Acoustic Window (Baffle Type)
11F_N37	Flat - Living Room	Acoustic Window (Baffle Type)
12F_N34	Flat - Bedroom	Acoustic Window (Baffle Type)
12F_N35	Flat - Bedroom	Acoustic Window (Baffle Type)
12F_N36	Flat - Bedroom	Acoustic Window (Baffle Type)
12F_N37	Flat - Living Room	Acoustic Window (Baffle Type)
13F_N35	Flat - Bedroom	Acoustic Window (Baffle Type)
13F_N36	Flat - Bedroom	Acoustic Window (Baffle Type)
13F_N37	Flat - Bedroom	Acoustic Window (Baffle Type)
13F_N38	Flat - Living Room	Acoustic Window (Baffle Type)
14F_N37	Flat - Bedroom	Acoustic Window (Baffle Type)
14F_N38	Flat - Bedroom	Acoustic Window (Baffle Type)
14F_N39	Flat - Bedroom	Acoustic Window (Baffle Type)
14F_N40	Flat - Living Room	Acoustic Window (Baffle Type)
15F_N39	Flat - Bedroom	Acoustic Window (Baffle Type)
15F_N40	Flat - Living Room	Acoustic Window (Baffle Type)
16F_N36	Flat - Bedroom	Acoustic Window (Baffle Type)
16F_N37	Flat - Living Room	Acoustic Window (Baffle Type)
17F_N36	Flat - Bedroom	Acoustic Window (Baffle Type)
17F_N37	Flat - Living Room	Acoustic Window (Baffle Type)
18F_N36	Flat - Bedroom	Acoustic Window (Baffle Type)
18F_N37	Flat - Living Room	Acoustic Window (Baffle Type)
19F_N36	Flat - Bedroom	Acoustic Window (Baffle Type)
19F_N37	Flat - Living Room	Acoustic Window (Baffle Type)
20F_N36	Flat - Bedroom	Acoustic Window (Baffle Type)
20F_N37	Flat - Living Room	Acoustic Window (Baffle Type)
21F_N36	Flat - Bedroom	Acoustic Window (Baffle Type)
21F_N37	Flat - Living Room	Acoustic Window (Baffle Type)
22F_N36	Flat - Bedroom	Acoustic Window (Baffle Type)
22F_N37	Flat - Living Room	Acoustic Window (Baffle Type)
23F_N35	Flat - Bedroom	Acoustic Window (Baffle Type)
23F_N36	Flat - Living Room	Acoustic Window (Baffle Type)
24F_N34	Flat - Bedroom	Acoustic Window (Baffle Type)
24F_N35	Flat - Living Room	Acoustic Window (Baffle Type)
25F_N34	Flat - Bedroom	Acoustic Window (Baffle Type)
25F_N35	Flat - Living Room	Acoustic Window (Baffle Type)
26F_N34	Flat - Bedroom	Acoustic Window (Baffle Type)
26F_N35	Flat - Living Room	Acoustic Window (Baffle Type)

Table 2.4 Summary of Predicted Road Traffic Noise Levels (Mitigated Scenario)

Floor	Facility / Room	Noise Criteria, dB(A)	Predicted Maximum $L_{10\ (1\ hour)}$, dB(A)
G/F	RCHD Interview Room	70	58
G/F	RCHD Administration Section	70	58
G/F	RCHD Conference Room	70	59
1/F – 3/F	RCHD Dormitory	70	70
1/F – 2/F	RCHD Rehabilitation Area	70	N/A
3/F – 4/F	Small Group Activity Room	70	59
4/F – 6/F	RCHE Dormitory	70	70
6/F	RCHE Interview Room	70	58
1/F – 6/F	Dining Room/ Multipurpose Room	70	57
1/F – 6/F	Nurse Station	70	57
1/F – 6/F	Sick Bay with Negative Pressure	70	57
7/F – 8/F	Residential Clubhouse	70	64
9/F – 26/F	Flat (Bedroom and Living Room)	70	70

2.8. CONCLUSION

2.8.1. Operational road traffic noise impact on the planned noise sensitive uses within the Proposed Development has been assessed. The assessment results revealed that the RCHD and RCHE dormitories, Dining Room/ Multipurpose Room, RCHD Rehabilitation Area, Residential Clubhouse and flats on the façade facing Wo Yi Hop Road would be with noise exceedances under the base case scenario. Mitigation measures in the form of fixed glazing (with mechanical ventilation) and acoustic window (baffle type) have been proposed to mitigate the road traffic noise impact. With the proposed noise mitigation measures put in place, 100% compliance rate could be achieved and no adverse traffic noise impact on the Proposed Development is anticipated.

3. FIXED NOISE IMPACT ASSESSMENT

3.1. RELEVANT LEGISLATION, STANDARDS AND GUIDELINES

3.1.1. The relevant legislation, standards and guidelines applicable to the fixed noise impact assessment include:

- Noise Control Ordinance (NCO) (Cap. 400);
- Technical Memorandum for the Assessment of Noise from Places Other Than Domestic Premises, Public Places or Construction Sites (IND-TM);
- Hong Kong Planning Standards and Guidelines (HKPSG);
- Good Practices on Pumping System Noise Control; and
- Good Practices on Ventilation System Noise Control.

3.1.2. IND-TM stipulates the appropriate Acceptable Noise Level (ANL) for fixed noise sources. The ANL is dependent on the area sensitivity rating of a NSR, as defined in Table 1 of the IND-TM (reproduced in **Table 3.1**). The area sensitivity rating of a NSR is determined by the type of area where the NSR is located and the presence of any influencing factors (IFs) such as major roads and industrial areas.

Table 3.1 Area Sensitivity Ratings

Type of Area Containing NSR	Degree to which NSR is affected by IF		
	Not Affected	Indirectly Affected	Directly Affected
Rural area, including country parks or village type developments	A	B	B
Low density residential area consisting of low-rise or isolated high-rise developments	A	B	C
Urban area	B	C	C
Area other than those above	B	B	C

3.1.3. The HKPSG also states that in order to plan for a better environment, all planned fixed noise sources should be located and designed that when assessed in accordance with the IND-TM, the level of the intruding noise at the façade of the nearest existing sensitive use should be at least 5 dB(A) below the appropriate ANL shown in Table 2 of IND-TM or, in the case of the background being 5 dB(A) lower than the ANL, should not be higher than the background. The ANLs stipulated in the IND-TM are provided in **Table 3.2**.

Table 3.2 Acceptable Noise Levels

Time Period	Area Sensitivity Rating		
	A	B	C
Day (0700 to 1900 hours)	60	65	70
Evening (1900 to 2300 hours)			
Night (2300 to 0700 hours)	50	55	60

3.1.4. The Application Site is located in an area contains mainly residential and industrial developments, with some Government, Institution or Community (G/IC) uses in the surroundings. The type of area where the NSRs at the Proposed Development located is classified as "area other than those above".

3.1.5. The Application Site is located in an area consists of a number of industrial establishments such as Cheung Wing Industrial Building to the north, and Kam Chong Industrial Building and Kam Foo Factory Building to the west of the Application Site. These industrial establishments are considered as an influencing factor according to Section 2.3.3 of the IND-TM. As the Proposed Development will be surrounded by these industrial establishments, Area Sensitivity Rating of "C" has been assigned for the NSRs at the Proposed Development as they will be directly affected by the IF.

3.2. IDENTIFICATION AND EVALUATION OF FIXED NOISE IMPACT

Fixed Noise Impact on the Proposed Development

Identification of Fixed Noise Sources

3.2.1. A number of existing fixed noise sources have been identified within 300m assessment area through desktop study and site visit conducted on 11 December 2023, 20 February and 08 April 2025. The site survey record is provided in **Appendix 3.3**. **Figures 3.1a** to **3.1e** indicates the locations of existing major fixed noise sources that may affect the Proposed Development. Information of the identified major fixed noise sources are summarized in **Table 3.3** and the details are provided in **Appendix 3.1**.

Table 3.3 Information of the Identified Fixed Noise Sources

Source ID	Location	Equipment	Elevation, mPD
S01 – S06	GDS Data Centre	Cooling Tower	+146.7
S07 – S09	Hotel Ease Tsuen Wan	Air-cooled Chiller	+104.9
S10 – S11	Kwai Wu Industrial Building	Cooling Tower	+99.3
S12 – S13	Silka Tsuen Wan Hotel	Cooling Tower	+88.9
S14 – S20	iTech Tower 2	Cooling Tower	+116.0

S21 – S24	Regent Centre	Air-cooled Chiller	+127.6/130.0
S25 – S28	Tung Tak Center	Cooling Tower	+75.8
S29 – S34	Asia Trade Center	Air-cooled Chiller	+180.9

Identification of Representative Noise Sensitive Receivers

3.2.2. Representative NSRs at the Proposed Development with line of sight to the identified fixed noise sources have been selected for assessment. **Figures 3.1a to 3.1e** shows the locations of the representative NSRs selected for fixed noise impact assessment.

Assessment Methodology

3.2.3. The assessment of fixed noise impact has been conducted based on standard acoustic principles and the procedures given in the IND-TM issued under the NCO.

3.2.4. Impacts due to individual noise sources have been calculated and logarithmically summed at the NSRs for calculation of the overall impacts:

$$\mathrm{PNL} = \sum \left[\mathrm{SWL_i} + \mathrm{C_{dist}} + \mathrm{C_{impulse}} + \mathrm{C_{tonality}} + \mathrm{C_{barrier}} + \mathrm{C_{facade}} \right]$$

where

PNL	=	Overall predicted noise level arising from individual source after various corrections
SWL_i	=	Sound power level of individual noise source
C_{dist}	=	Correction for distance attenuation
$C_{impulse}$	=	Correction [+3 dB(A)] for impulsive noise in IND-TM, if applicable
$C_{tonality}$	=	Correction [+3 or +6 dB(A)] for tonality as in IND-TM, if applicable
$C_{barrier}$	=	Correction [-5 or -10 dB(A)] for barrier effects due to various architectural features/ topography/ obstacles/ purpose-built noise barrier/ parapet wall, if any
C_{facade}	=	Correction [+3 dB(A)] for façade reflection at receiver

3.2.5. The Sound Power Levels of the identified major fixed noise sources are determined with reference to equipment catalogue of similar models. Cumulative fixed noise impact arising from existing major fixed noise sources located within 300m assessment area at the representative NSRs of the Proposed Development have been assessed.

Assessment Results

3.2.6. The results of cumulative fixed noise impact assessment for daytime/evening and night-time periods are summarized in **Table 3.4** and **Table 3.5** below with detailed calculations provided in **Appendix 3.2**.

Table 3.4 Predicted Fixed Noise Levels at Representative NSRs (Daytime and Evening)

Floor	NSR ID	Description	Predicted Maximum Fixed Noise Level, dB(A)	Area Sensitivity Rating	Noise Criteria, dB(A)	Compliance
14/F	14F_N18, N41 and N42	Flats	57	C	70	Yes
17/F	17F_N17, N38 and N39	Flats	57	C	70	Yes
19/F	19F_N17, N38 and N39	Flats	56	C	70	Yes
22/F	22F_N17, N38 and N39	Flats	56	C	70	Yes
26/F	26F_N15, N36 and N37	Flats	56	C	70	Yes

Table 3.5 Predicted Fixed Noise Levels at Representative NSRs (Night-time)

Floor	NSR ID	Description	Predicted Maximum Fixed Noise Level, dB(A)	Area Sensitivity Rating	Noise Criteria, dB(A)	Compliance
14/F	14F_N18, N41 and N42	Flats	57	C	60	Yes
17/F	17F_N17, N38 and N39	Flats	57	C	60	Yes
19/F	19F_N17, N38 and N39	Flats	56	C	60	Yes
22/F	22F_N17, N38 and N39	Flats	56	C	60	Yes
26/F	26F_N15, N36 and N37	Flats	56	C	60	Yes

3.2.7. According to the fixed noise assessment results, no exceedance is predicted at all representative NSRs of the Proposed Development under base case scenario for both daytime/evening and night-time periods. Therefore, fixed noise mitigation measure to protect the Proposed Development is not required.

Fixed Noise Impact from the Proposed Development

Impact Identification and Evaluation

3.2.8. According to the latest development scheme, potential fixed noise sources within the Proposed Development include the emergency generator room, transformer rooms, fan rooms, pump rooms, E&M rooms and ventilation system of the kitchens.

3.2.9. To ensure the fixed plant noise generated by the Proposed Development would not cause excessive impact to neighbouring noise sensitive uses, fixed noise sources within the Proposed Development shall be properly designed to meet the relevant noise criteria as stipulated in Chapter 9 of the HKPSG.

3.2.10. Provisions shall be made to control the fixed noise sources by suitable at source noise

control measures such as silencers and acoustic linings when necessary. As such, it is anticipated that the fixed plant noise impact on the surrounding NSRs due to the operation of the Proposed Development will not exceed the relevant noise criteria under the HKPSG and NCO.

Recommended Mitigation Measures

3.2.11. The following noise mitigation measures are recommended to control noise emissions from planned fixed plant noise sources within the Proposed Development:

- Select quieter plant / equipment during procurement; and
- Provide suitable at source noise control measures such as silencers and acoustic linings when necessary.

3.3. CONCLUSION

3.3.1. A number of existing fixed noise sources have been identified within 300m assessment area. Fixed noise impact assessment has been conducted for the Proposed Development. Based on the assessment results, no exceedance is predicted at all representative NSRs of the Proposed Development under the base case scenario. Hence, no insurmountable fixed noise impact on the Proposed Development is envisaged.

3.3.2. To ensure the fixed plant noise generated by the Proposed Development would not cause excessive impact to neighbouring noise sensitive uses, fixed noise sources within the Proposed Development shall be properly designed to meet the relevant noise criteria as stipulated in Chapter 9 of the HKPSG. Provisions shall be made to control the fixed noise sources by suitable at source noise control measures such as silencers and acoustic linings when necessary. As such, it is anticipated that the fixed plant noise impact on the surrounding NSRs due to the operation of the Proposed Development will not exceed the relevant noise criteria under the HKPSG and NCO.

4. CONCLUSION

4.1.1. Lai Sun Textiles Co. Ltd. proposes to rezone the Application Site from “Other Specified Uses” annotated “Business” to “Residential (Group E) 2”, at Lot 316 in D.D. 444 and Kwai Chung Town Lot (KTCL) 146, 97-107 Wo Yi Hop Road, New Territories. This NIA Report addressed the potential road traffic noise and fixed noise impacts during the operation of the Proposed Development.

4.1.2. Road traffic noise impact on the planned noise sensitive uses within the Proposed Development has been assessed. Mitigation measures in the form of fixed glazing (with mechanical ventilation) and acoustic window (baffle type) have been proposed to mitigate the road traffic noise impact to the Proposed Development. With the recommended noise mitigation measures put in place, no adverse road traffic noise impact on the Proposed Development is anticipated.

4.1.3. Fixed noise impact on the Proposed Development has also been assessed. Based on the assessment results, no exceedance is predicted at all representative NSRs of the Proposed Development under the base case scenario. Hence, no insurmountable fixed noise impact on the Proposed Development is envisaged.

4.1.4. Fixed noise sources within the Proposed Development shall be properly designed to meet the relevant noise criteria as stipulated in Chapter 9 of the HKPSG. Suitable at source noise control measures such as silencers and acoustic linings shall be provided when necessary.

FIGURE 1.1
LOCATION OF APPLICATION SITE

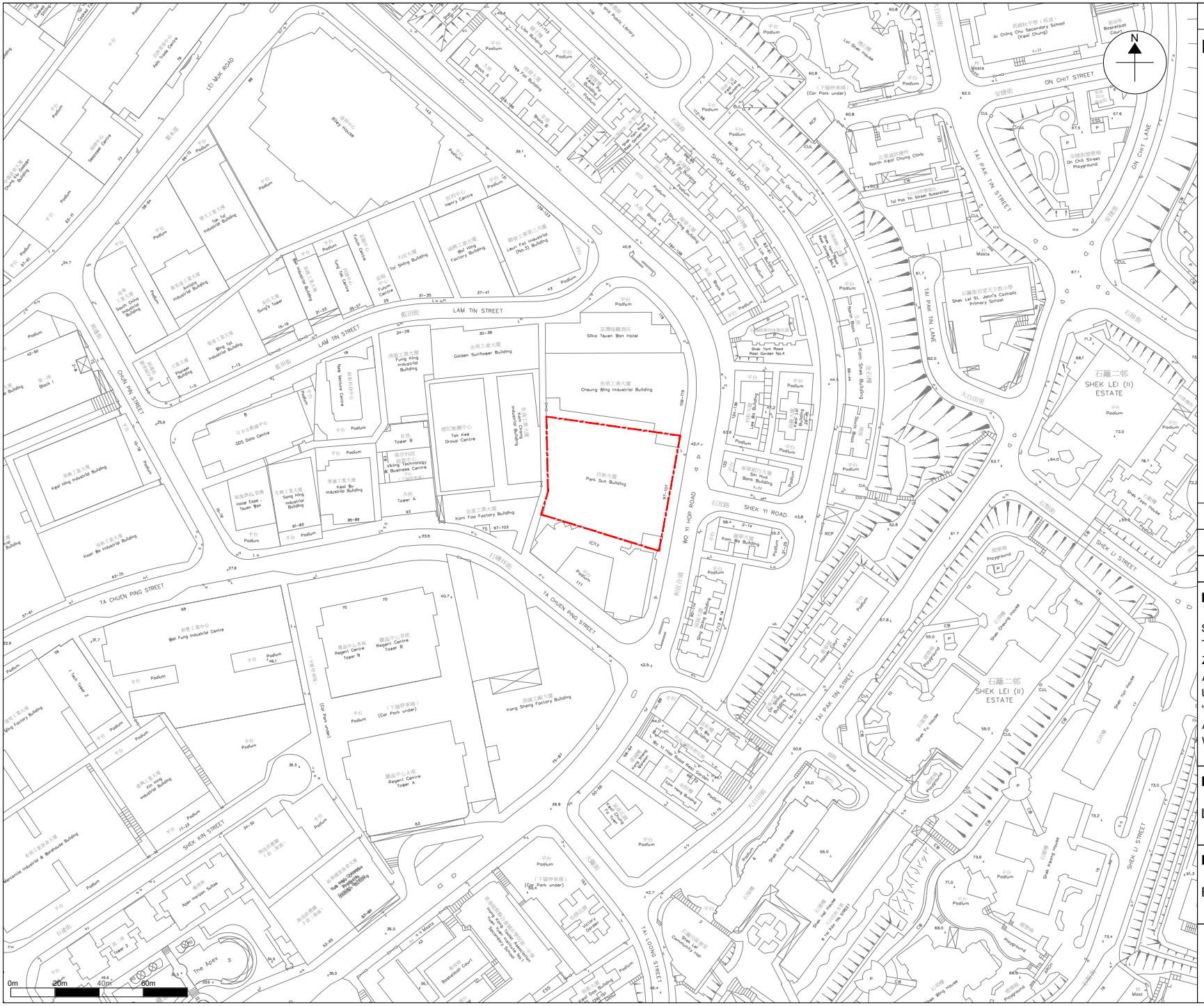

LEGEND:

▭ Application Site

	Prepared	Checked	Approved
Initial	RW	ZC	HM
Date	20240315	20240315	20240315

Project Title

SECTION 12A APPLICATION FOR AMENDMENT TO THE APPROVED KWAI CHUNG OUTLINE ZONING PLAN NO. S/KC/32 TO REZONE THE APPLICATION SITE FROM “OTHER SPECIFIED USES” ANNOTATED “BUSINESS” TO “RESIDENTIAL (GROUP E) 2”, LOT 316 IN D.D.444 AND KWAI CHUNG TOWN LOT (KTCL) 146, 97-107 WO YI HOP ROAD, NEW TERRITORIES

Figure Title

Location of Application Site

Figure No.

Figure 1.1

Rev.

0

BXG

BeeXergy Consulting Limited

\\BEEXERGY_NAS\Proj.Work\23_Work\DeSpace - EA for RCHE Development at Park Sun (W23055)\PREP\Deliverables\NIA Report\RT23055-NIA-01_v0\Figure\Working\Figure 1.1.dwg

FIGURE 2.1A – 2.1R

LOCATION OF NOISE SENSITIVE RECEIVERS FOR ROAD TRAFFIC NOISE ASSESSMENT

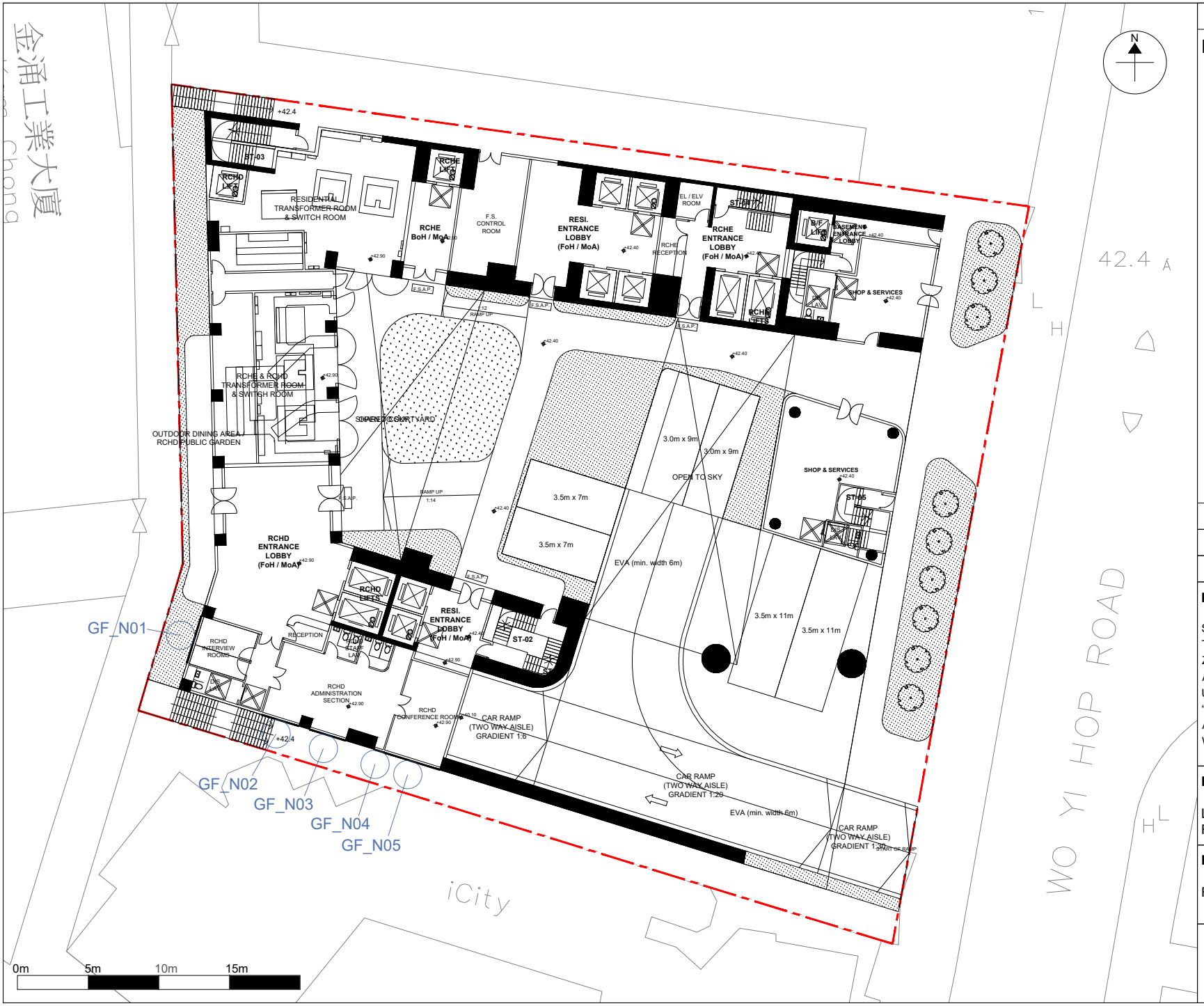

LEGEND:

Application Site

Noise Sensitive Receiver

	Prepared	Checked	Approved
Initial	LY	YS	HM
Date	20250502	20250502	20250502

Project Title

SECTION 12A APPLICATION FOR AMENDMENT TO THE APPROVED KWAI CHUNG OUTLINE ZONING PLAN NO. S/KC/32 TO REZONE THE APPLICATION SITE FROM "OTHER SPECIFIED USES" ANNOTATED "BUSINESS" TO "RESIDENTIAL (GROUP E) 2", LOT 316 IN D.D.444 AND KWAI CHUNG TOWN LOT (KTCL) 146, 97-107 WO YI HOP ROAD, NEW TERRITORIES

Figure Title

Location of Noise Sensitive Receivers for Road Traffic Noise Assessment (G/F)

Figure No.	**Rev.**
Figure 2.1a	0

BeeXergy Consulting Limited

\\BEEXERGY_NAS\Proj.Work\23_Work\DeSpace - EA for RCHE Development at Park Sun (W23055)\PREP\Figure NSR.dxf

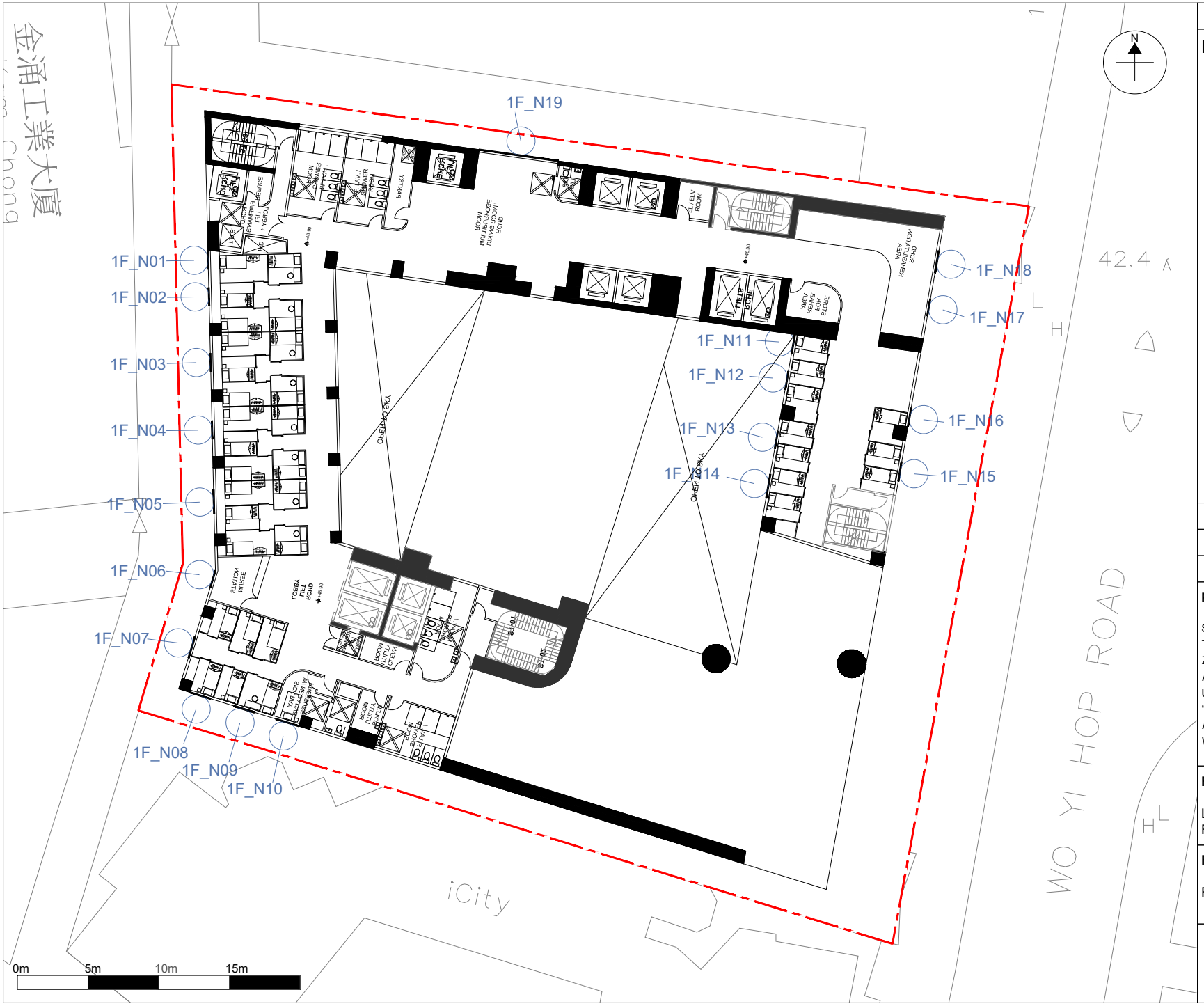

LEGEND:

Application Site

Noise Sensitive Receiver

	Prepared	Checked	Approved
Initial	LY	YS	HM
Date	20250502	20250502	20250502

Project Title

SECTION 12A APPLICATION FOR AMENDMENT TO THE APPROVED KWAI CHUNG OUTLINE ZONING PLAN NO. S/KC/32 TO REZONE THE APPLICATION SITE FROM "OTHER SPECIFIED USES" ANNOTATED "BUSINESS" TO "RESIDENTIAL (GROUP E) 2", LOT 316 IN D.D.444 AND KWAI CHUNG TOWN LOT (KTCL) 146, 97-107 WO YI HOP ROAD, NEW TERRITORIES

Figure Title

Location of Noise Sensitive Receivers for Road Traffic Noise Assessment (1/F)

Figure No.	**Rev.**
Figure 2.1b	0

BXG

BeeXergy Consulting Limited

\\BEEXERGY_NAS\Proj.Work\23_Work\DeSpace - EA for RCHE Development at Park Sun (W23055)\PREP\Figure NSR.dxf

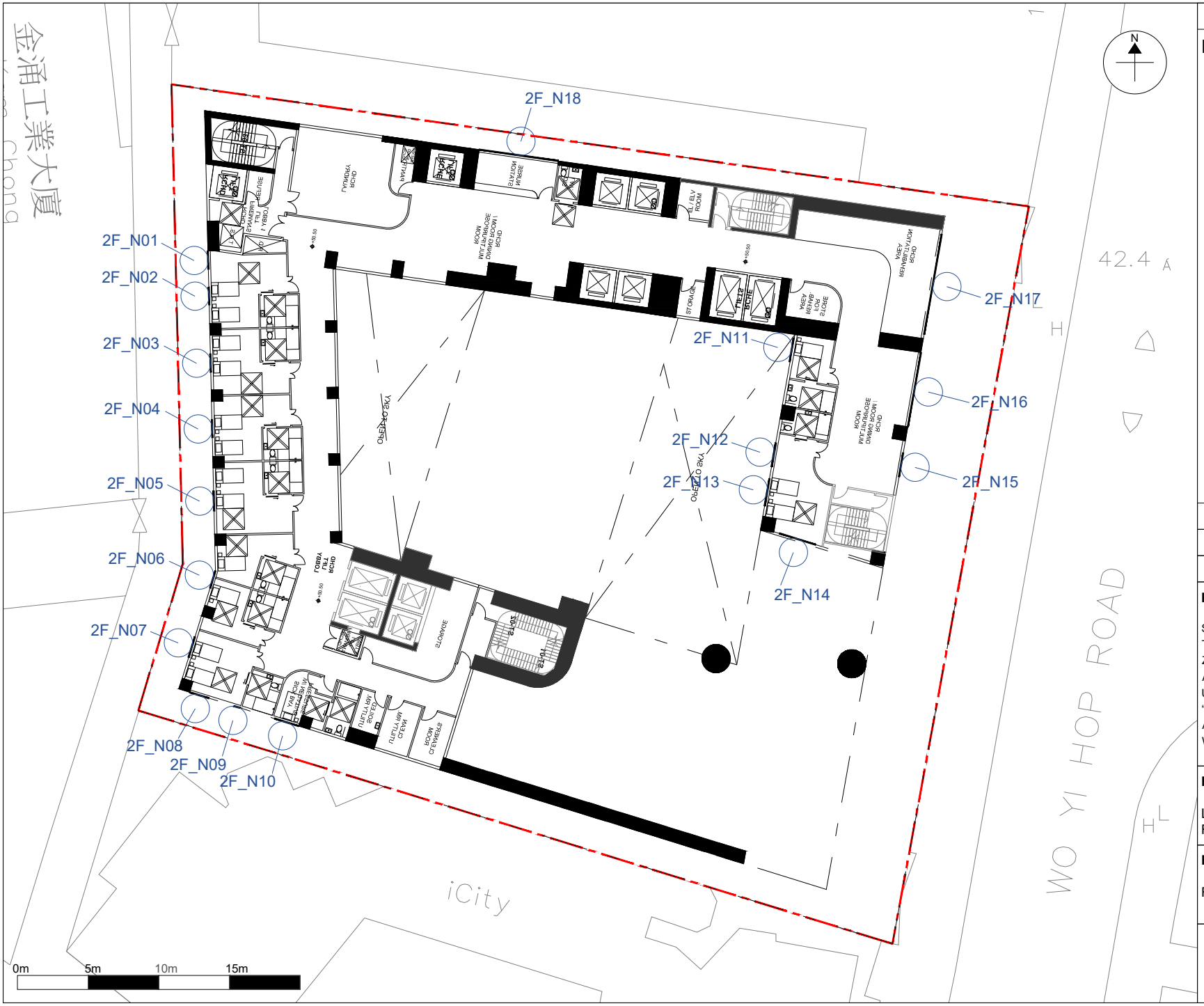

LEGEND:

Application Site

Noise Sensitive Receiver

	Prepared	Checked	Approved
Initial	LY	YS	HM
Date	20250502	20250502	20250502

Project Title

SECTION 12A APPLICATION FOR AMENDMENT TO THE APPROVED KWAI CHUNG OUTLINE ZONING PLAN NO. S/KC/32 TO REZONE THE APPLICATION SITE FROM "OTHER SPECIFIED USES" ANNOTATED "BUSINESS" TO "RESIDENTIAL (GROUP E) 2", LOT 316 IN D.D.444 AND KWAI CHUNG TOWN LOT (KTCL) 146, 97-107 WO YI HOP ROAD, NEW TERRITORIES

Figure Title

Location of Noise Sensitive Receivers for Road Traffic Noise Assessment (2/F)

Figure No.	**Rev.**
Figure 2.1c	0

BXG

BeeXergy Consulting Limited

\\BEEXERGY_NAS\Proj.Work\23_Work\DeSpace - EA for RCHE Development at Park Sun (W23055)\PREP\Figure NSR.dxf

LEGEND:

Application Site

Noise Sensitive Receiver

	Prepared	Checked	Approved
Initial	LY	YS	HM
Date	20250502	20250502	20250502

Project Title

SECTION 12A APPLICATION FOR AMENDMENT TO THE APPROVED KWAI CHUNG OUTLINE ZONING PLAN NO. S/KC/32 TO REZONE THE APPLICATION SITE FROM "OTHER SPECIFIED USES" ANNOTATED "BUSINESS" TO "RESIDENTIAL (GROUP E) 2", LOT 316 IN D.D.444 AND KWAI CHUNG TOWN LOT (KTCL) 146, 97-107 WO YI HOP ROAD, NEW TERRITORIES

Figure Title

Location of Noise Sensitive Receivers for Road Traffic Noise Assessment (3/F)

Figure No.	**Rev.**
Figure 2.1d	0

BXG

BeeXergy Consulting Limited

\\BEEXERGY_NAS\Proj.Work\23_Work\DeSpace - EA for RCHE Development at Park Sun (W23055)\PREP\Figure NSR.dxf

LEGEND:

Application Site

Noise Sensitive Receiver

	Prepared	Checked	Approved
Initial	LY	YS	HM
Date	20250502	20250502	20250502

Project Title

SECTION 12A APPLICATION FOR AMENDMENT TO THE APPROVED KWAI CHUNG OUTLINE ZONING PLAN NO. S/KC/32 TO REZONE THE APPLICATION SITE FROM "OTHER SPECIFIED USES" ANNOTATED "BUSINESS" TO "RESIDENTIAL (GROUP E) 2", LOT 316 IN D.D.444 AND KWAI CHUNG TOWN LOT (KTCL) 146, 97-107 WO YI HOP ROAD, NEW TERRITORIES

Figure Title

Location of Noise Sensitive Receivers for Road Traffic Noise Assessment (4/F)

Figure No.	**Rev.**
Figure 2.1e	0

BeeXergy Consulting Limited

\\BEEXERGY_NAS\Proj.Work\23_Work\DeSpace - EA for RCHE Development at Park Sun (W23055)\PREP\Figure NSR.dxf

LEGEND:

Application Site

Noise Sensitive Receiver

	Prepared	Checked	Approved
Initial	LY	YS	HM
Date	20250502	20250502	20250502

Project Title

SECTION 12A APPLICATION FOR AMENDMENT TO THE APPROVED KWAI CHUNG OUTLINE ZONING PLAN NO. S/KC/32 TO REZONE THE APPLICATION SITE FROM "OTHER SPECIFIED USES" ANNOTATED "BUSINESS" TO "RESIDENTIAL (GROUP E) 2", LOT 316 IN D.D.444 AND KWAI CHUNG TOWN LOT (KTCL) 146, 97-107 WO YI HOP ROAD, NEW TERRITORIES

Figure Title

Location of Noise Sensitive Receivers for Road Traffic Noise Assessment (5/F)

Figure No.	**Rev.**
Figure 2.1f	0

BeeXergy Consulting Limited

\\BEEXERGY_NAS\Proj.Work\23_Work\DeSpace - EA for RCHE Development at Park Sun (W23055)\PREP\Figure NSR.dxf

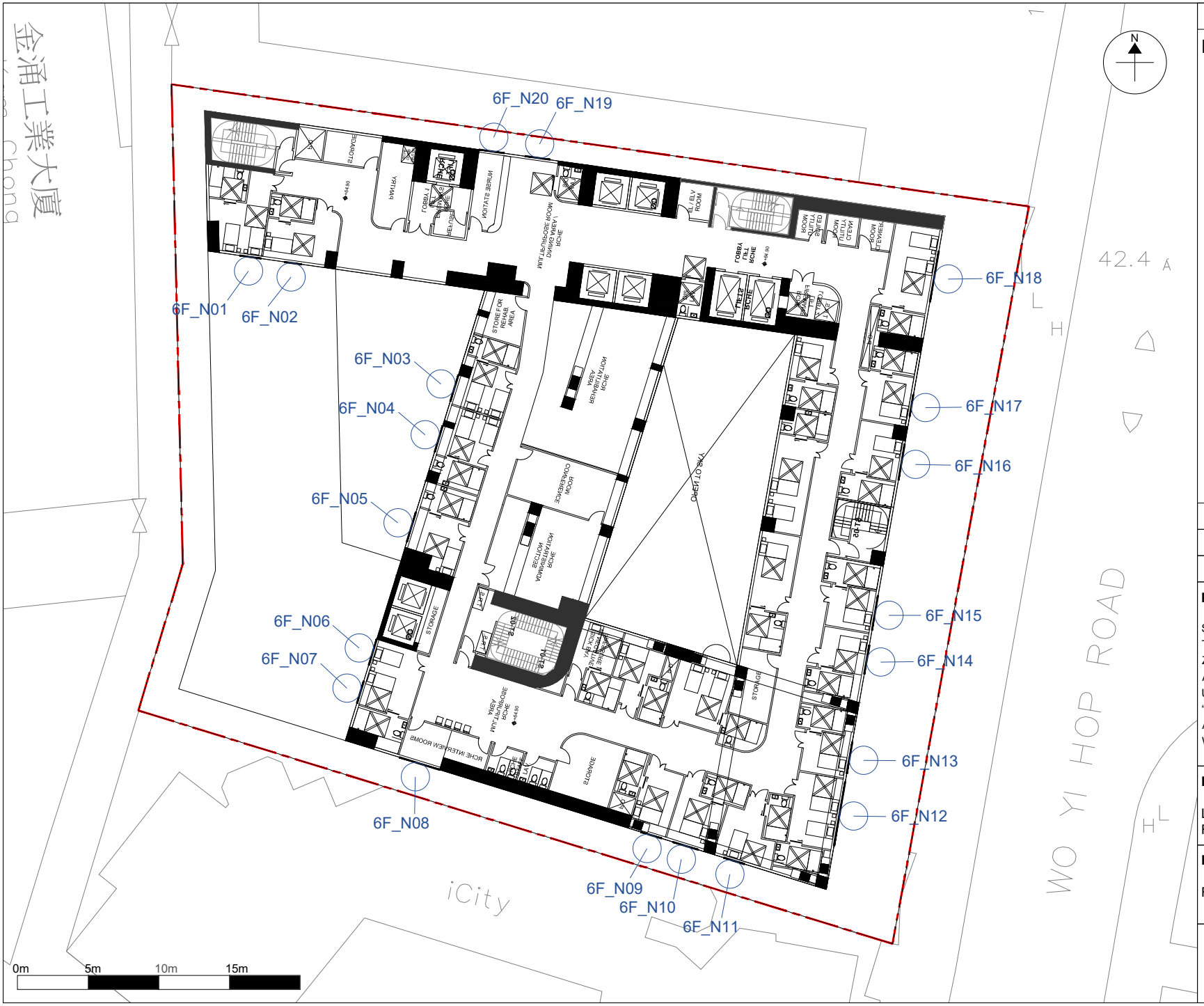

LEGEND:

Application Site

Noise Sensitive Receiver

	Prepared	Checked	Approved
Initial	LY	YS	HM
Date	20250502	20250502	20250502

Project Title

SECTION 12A APPLICATION FOR AMENDMENT TO THE APPROVED KWAI CHUNG OUTLINE ZONING PLAN NO. S/KC/32 TO REZONE THE APPLICATION SITE FROM "OTHER SPECIFIED USES" ANNOTATED "BUSINESS" TO "RESIDENTIAL (GROUP E) 2", LOT 316 IN D.D.444 AND KWAI CHUNG TOWN LOT (KTCL) 146, 97-107 WO YI HOP ROAD, NEW TERRITORIES

Figure Title

Location of Noise Sensitive Receivers for Road Traffic Noise Assessment (6/F)

Figure No.	**Rev.**
Figure 2.1g	0

BXG

BeeXergy Consulting Limited

\\BEEXERGY_NAS\Proj.Work\23_Work\DeSpace - EA for RCHE Development at Park Sun (W23055)\PREP\Figure NSR.dxf

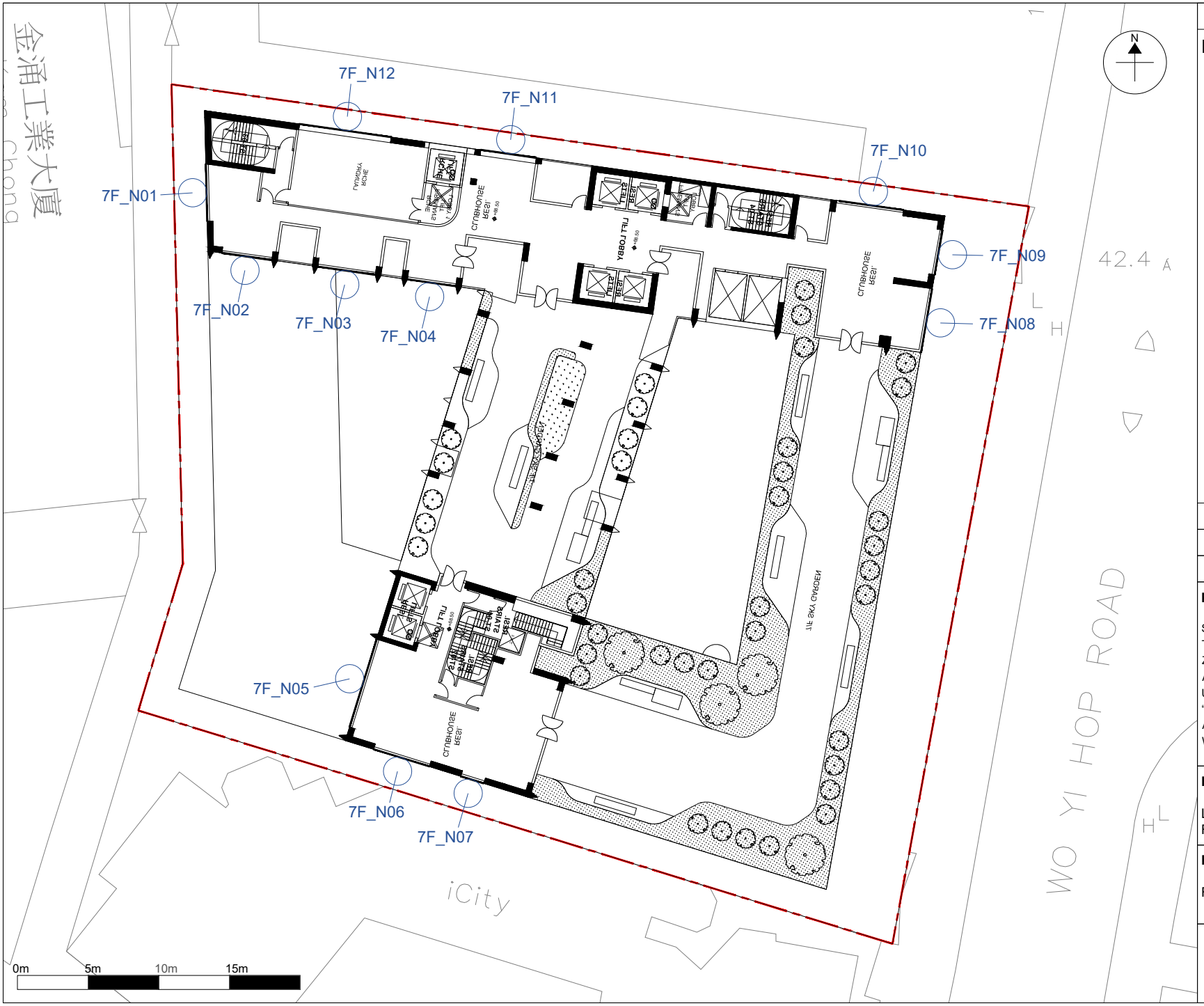

LEGEND:

Application Site

Noise Sensitive Receiver

	Prepared	Checked	Approved
Initial	LY	YS	HM
Date	20250502	20250502	20250502

Project Title

SECTION 12A APPLICATION FOR AMENDMENT TO THE APPROVED KWAI CHUNG OUTLINE ZONING PLAN NO. S/KC/32 TO REZONE THE APPLICATION SITE FROM "OTHER SPECIFIED USES" ANNOTATED "BUSINESS" TO "RESIDENTIAL (GROUP E) 2", LOT 316 IN D.D.444 AND KWAI CHUNG TOWN LOT (KTCL) 146, 97-107 WO YI HOP ROAD, NEW TERRITORIES

Figure Title

Location of Noise Sensitive Receivers for Road Traffic Noise Assessment (7/F)

Figure No.	**Rev.**
Figure 2.1h	0

BXG

BeeXergy Consulting Limited

\\BEEXERGY_NAS\Proj.Work\23_Work\DeSpace - EA for RCHE Development at Park Sun (W23055)\PREP\Figure NSR.dxf

LEGEND:

Application Site

Noise Sensitive Receiver

	Prepared	Checked	Approved
Initial	LY	YS	HM
Date	20250502	20250502	20250502

Project Title

SECTION 12A APPLICATION FOR AMENDMENT TO THE APPROVED KWAI CHUNG OUTLINE ZONING PLAN NO. S/KC/32 TO REZONE THE APPLICATION SITE FROM "OTHER SPECIFIED USES" ANNOTATED "BUSINESS" TO "RESIDENTIAL (GROUP E) 2", LOT 316 IN D.D.444 AND KWAI CHUNG TOWN LOT (KTCL) 146, 97-107 WO YI HOP ROAD, NEW TERRITORIES

Figure Title

Location of Noise Sensitive Receivers for Road Traffic Noise Assessment (8/F)

Figure No.	**Rev.**
Figure 2.1i	0

BXG

BeeXergy Consulting Limited

\\BEEXERGY_NAS\Proj.Work\23_Work\DeSpace - EA for RCHE Development at Park Sun (W23055)\PREP\Figure NSR.dxf

LEGEND:

Application Site

Noise Sensitive Receiver

	Prepared	Checked	Approved
Initial	LY	YS	HM
Date	20250502	20250502	20250502

Project Title

SECTION 12A APPLICATION FOR AMENDMENT TO THE APPROVED KWAI CHUNG OUTLINE ZONING PLAN NO. S/KC/32 TO REZONE THE APPLICATION SITE FROM "OTHER SPECIFIED USES" ANNOTATED "BUSINESS" TO "RESIDENTIAL (GROUP E) 2", LOT 316 IN D.D.444 AND KWAI CHUNG TOWN LOT (KTCL) 146, 97-107 WO YI HOP ROAD, NEW TERRITORIES

Figure Title

Location of Noise Sensitive Receivers for Road Traffic Noise Assessment (9/F-12/F)

Figure No.	**Rev.**
Figure 2.1j	0

BXG

BeeXergy Consulting Limited

\\BEEXERGY_NAS\Proj.Work\23_Work\DeSpace - EA for RCHE Development at Park Sun (W23055)\PREP\Figure NSR.dxf

LEGEND:

Application Site

Noise Sensitive Receiver

	Prepared	Checked	Approved
Initial	LY	YS	HM
Date	20250502	20250502	20250502

Project Title

SECTION 12A APPLICATION FOR AMENDMENT TO THE APPROVED KWAI CHUNG OUTLINE ZONING PLAN NO. S/KC/32 TO REZONE THE APPLICATION SITE FROM "OTHER SPECIFIED USES" ANNOTATED "BUSINESS" TO "RESIDENTIAL (GROUP E) 2", LOT 316 IN D.D.444 AND KWAI CHUNG TOWN LOT (KTCL) 146, 97-107 WO YI HOP ROAD, NEW TERRITORIES

Figure Title

Location of Noise Sensitive Receivers for Road Traffic Noise Assessment (13/F)

Figure No.	**Rev.**
Figure 2.1k	0

BXG

BeeXergy Consulting Limited

\\BEEXERGY_NAS\Proj.Work\23_Work\DeSpace - EA for RCHE Development at Park Sun (W23055)\PREP\Figure NSR.dxf

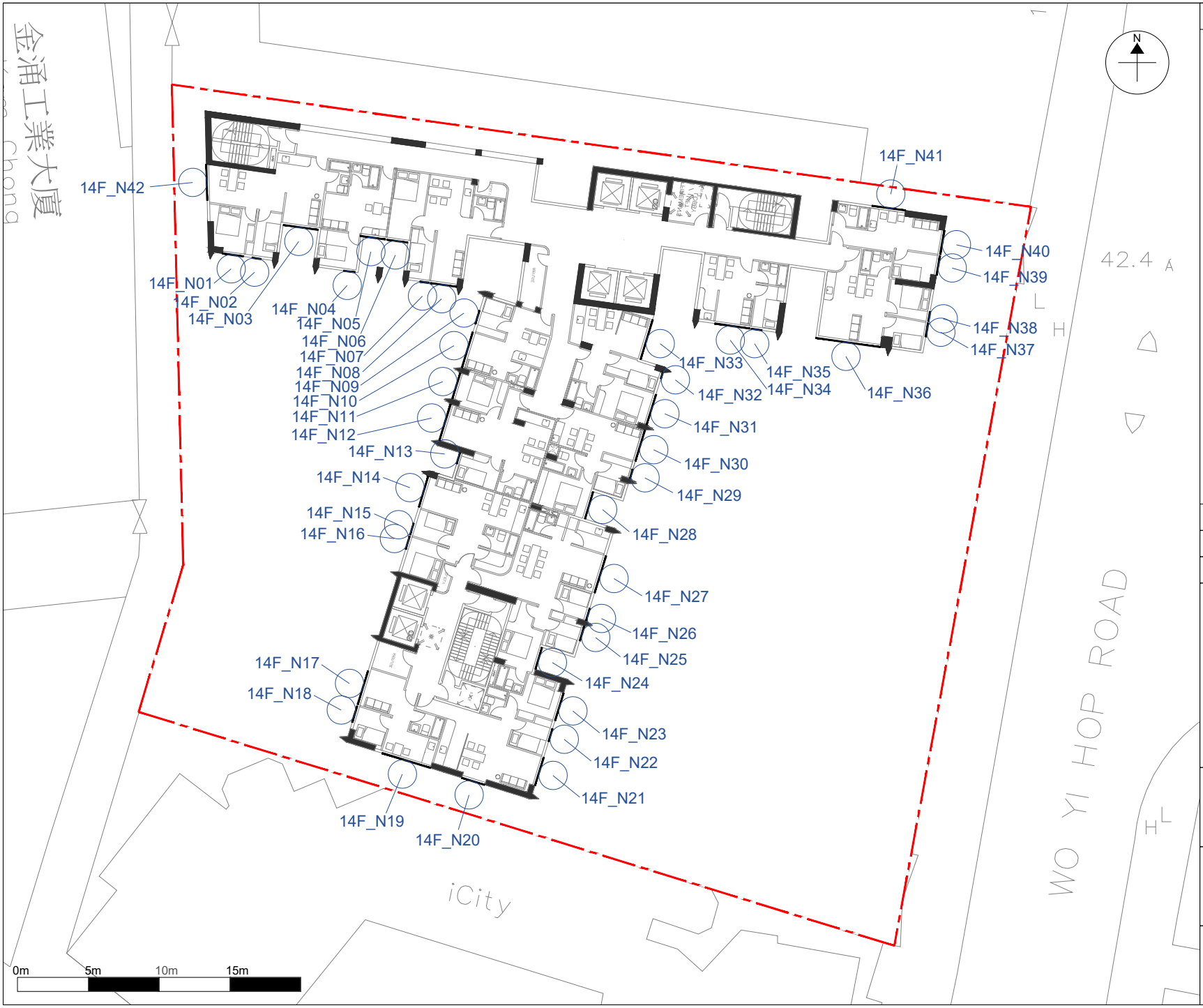

LEGEND:

Application Site

Noise Sensitive Receiver

	Prepared	Checked	Approved
Initial	LY	YS	HM
Date	20250502	20250502	20250502

Project Title

SECTION 12A APPLICATION FOR AMENDMENT TO THE APPROVED KWAI CHUNG OUTLINE ZONING PLAN NO. S/KC/32 TO REZONE THE APPLICATION SITE FROM "OTHER SPECIFIED USES" ANNOTATED "BUSINESS" TO "RESIDENTIAL (GROUP E) 2", LOT 316 IN D.D.444 AND KWAI CHUNG TOWN LOT (KTCL) 146, 97-107 WO YI HOP ROAD, NEW TERRITORIES

Figure Title

Location of Noise Sensitive Receivers for Road Traffic Noise Assessment (14/F)

Figure No.	**Rev.**
Figure 2.1l	0

BXG

BeeXergy Consulting Limited

\\BEEXERGY_NAS\Proj.Work\23_Work\DeSpace - EA for RCHE Development at Park Sun (W23055)\PREP\Figure NSR.dxf

LEGEND:

Application Site

Noise Sensitive Receiver

	Prepared	Checked	Approved
Initial	LY	YS	HM
Date	20250502	20250502	20250502

Project Title

SECTION 12A APPLICATION FOR AMENDMENT TO THE APPROVED KWAI CHUNG OUTLINE ZONING PLAN NO. S/KC/32 TO REZONE THE APPLICATION SITE FROM "OTHER SPECIFIED USES" ANNOTATED "BUSINESS" TO "RESIDENTIAL (GROUP E) 2", LOT 316 IN D.D.444 AND KWAI CHUNG TOWN LOT (KTCL) 146, 97-107 WO YI HOP ROAD, NEW TERRITORIES

Figure Title

Location of Noise Sensitive Receivers for Road Traffic Noise Assessment (15/F)

Figure No.	Rev.
Figure 2.1m	0

BXG

BeeXergy Consulting Limited

LEGEND:

Application Site

Noise Sensitive Receiver

	Prepared	Checked	Approved
Initial	LY	YS	HM
Date	20250502	20250502	20250502

Project Title

SECTION 12A APPLICATION FOR AMENDMENT TO THE APPROVED KWAI CHUNG OUTLINE ZONING PLAN NO. S/KC/32 TO REZONE THE APPLICATION SITE FROM "OTHER SPECIFIED USES" ANNOTATED "BUSINESS" TO "RESIDENTIAL (GROUP E) 2", LOT 316 IN D.D.444 AND KWAI CHUNG TOWN LOT (KTCL) 146, 97-107 WO YI HOP ROAD, NEW TERRITORIES

Figure Title

Location of Noise Sensitive Receivers for Road Traffic Noise Assessment (16/F-18/F)

Figure No.	**Rev.**
Figure 2.1n	0

BXG

BeeXergy Consulting Limited

\\BEEXERGY_NAS\Proj.Work\23_Work\DeSpace - EA for RCHE Development at Park Sun (W23055)\PREP\Figure NSR.dxf

LEGEND:

Application Site

Noise Sensitive Receiver

	Prepared	Checked	Approved
Initial	LY	YS	HM
Date	20250502	20250502	20250502

Project Title

SECTION 12A APPLICATION FOR AMENDMENT TO THE APPROVED KWAI CHUNG OUTLINE ZONING PLAN NO. S/KC/32 TO REZONE THE APPLICATION SITE FROM "OTHER SPECIFIED USES" ANNOTATED "BUSINESS" TO "RESIDENTIAL (GROUP E) 2", LOT 316 IN D.D.444 AND KWAI CHUNG TOWN LOT (KTCL) 146, 97-107 WO YI HOP ROAD, NEW TERRITORIES

Figure Title

Location of Noise Sensitive Receivers for Road Traffic Noise Assessment (19/F-20/F)

Figure No.	**Rev.**
Figure 2.1o	0

BXG

BeeXergy Consulting Limited

\\BEEXERGY_NAS\Proj.Work\23_Work\DeSpace - EA for RCHE Development at Park Sun (W23055)\PREP\Figure NSR.dxf

LEGEND:

Application Site

Noise Sensitive Receiver

	Prepared	Checked	Approved
Initial	LY	YS	HM
Date	20250502	20250502	20250502

Project Title

SECTION 12A APPLICATION FOR AMENDMENT TO THE APPROVED KWAI CHUNG OUTLINE ZONING PLAN NO. S/KC/32 TO REZONE THE APPLICATION SITE FROM "OTHER SPECIFIED USES" ANNOTATED "BUSINESS" TO "RESIDENTIAL (GROUP E) 2", LOT 316 IN D.D.444 AND KWAI CHUNG TOWN LOT (KTCL) 146, 97-107 WO YI HOP ROAD, NEW TERRITORIES

Figure Title

Location of Noise Sensitive Receivers for Road Traffic Noise Assessment (21/F-22/F)

Figure No.	**Rev.**
Figure 2.1p	0

BXG

BeeXergy Consulting Limited

\\BEEXERGY_NAS\Proj.Work\23_Work\DeSpace - EA for RCHE Development at Park Sun (W23055)\PREP\Figure NSR.dxf

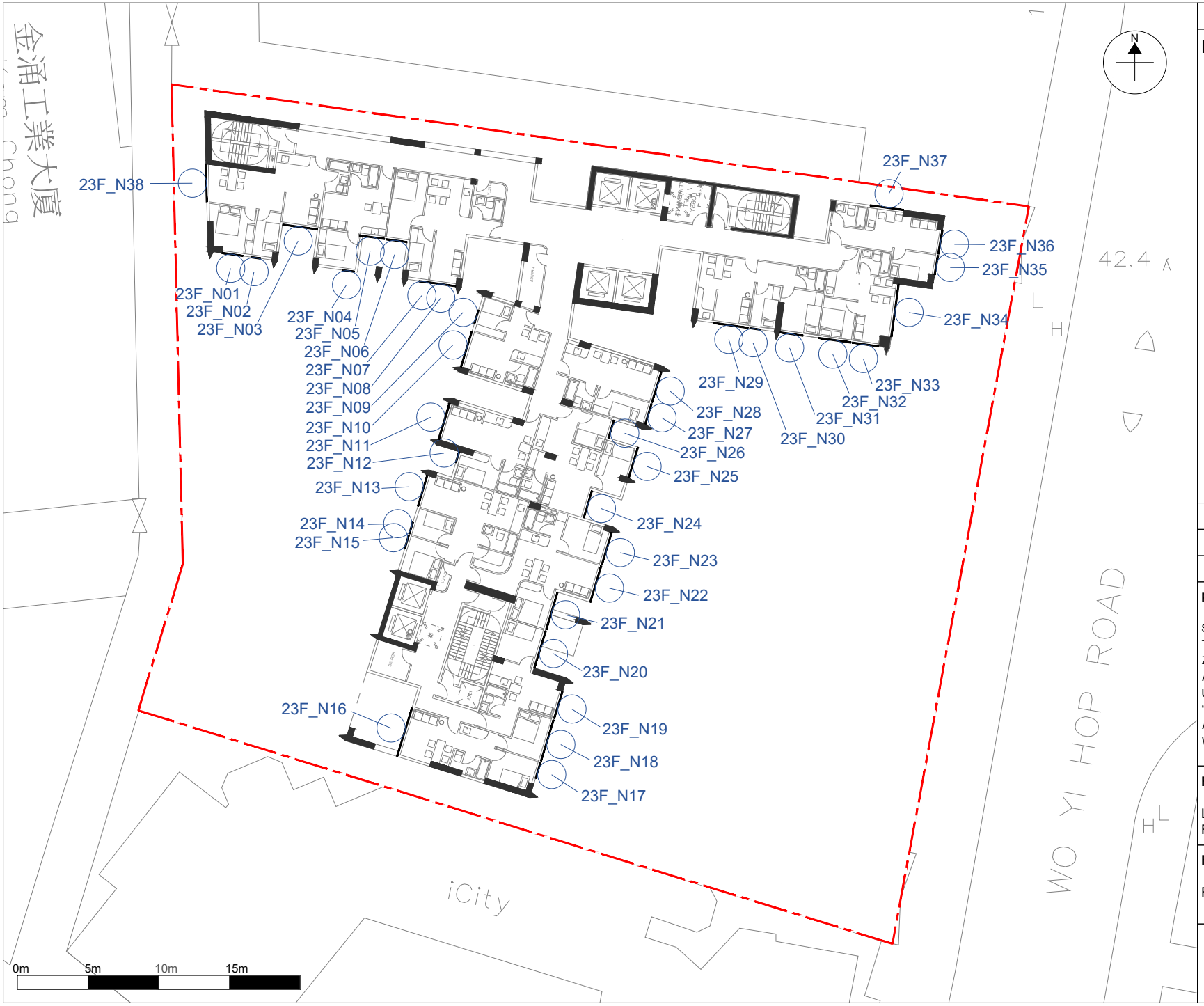

LEGEND:

Application Site

Noise Sensitive Receiver

	Prepared	Checked	Approved
Initial	LY	YS	HM
Date	20250502	20250502	20250502

Project Title

SECTION 12A APPLICATION FOR AMENDMENT TO THE APPROVED KWAI CHUNG OUTLINE ZONING PLAN NO. S/KC/32 TO REZONE THE APPLICATION SITE FROM "OTHER SPECIFIED USES" ANNOTATED "BUSINESS" TO "RESIDENTIAL (GROUP E) 2", LOT 316 IN D.D.444 AND KWAI CHUNG TOWN LOT (KTCL) 146, 97-107 WO YI HOP ROAD, NEW TERRITORIES

Figure Title

Location of Noise Sensitive Receivers for Road Traffic Noise Assessment (23/F)

Figure No.	**Rev.**
Figure 2.1q	0

BXG

BeeXergy Consulting Limited

\\BEEXERGY_NAS\Proj.Work\23_Work\DeSpace - EA for RCHE Development at Park Sun (W23055)\PREP\Figure NSR.dxf

LEGEND:

Application Site

Noise Sensitive Receiver

	Prepared	Checked	Approved
Initial	LY	YS	HM
Date	20250502	20250502	20250502

Project Title

SECTION 12A APPLICATION FOR AMENDMENT TO THE APPROVED KWAI CHUNG OUTLINE ZONING PLAN NO. S/KC/32 TO REZONE THE APPLICATION SITE FROM "OTHER SPECIFIED USES" ANNOTATED "BUSINESS" TO "RESIDENTIAL (GROUP E) 2", LOT 316 IN D.D.444 AND KWAI CHUNG TOWN LOT (KTCL) 146, 97-107 WO YI HOP ROAD, NEW TERRITORIES

Figure Title

Location of Noise Sensitive Receivers for Road Traffic Noise Assessment (24/F-26/F)

Figure No.	**Rev.**
Figure 2.1r	0

BXG

BeeXergy Consulting Limited

\\BEEXERGY_NAS\Proj.Work\23_Work\DeSpace - EA for RCHE Development at Park Sun (W23055)\PREP\Figure NSR.dxf

FIGURE 2.2A – 2.2Q

LOCATION OF PROPOSED TRAFFIC NOISE MITIGATION MEASURES

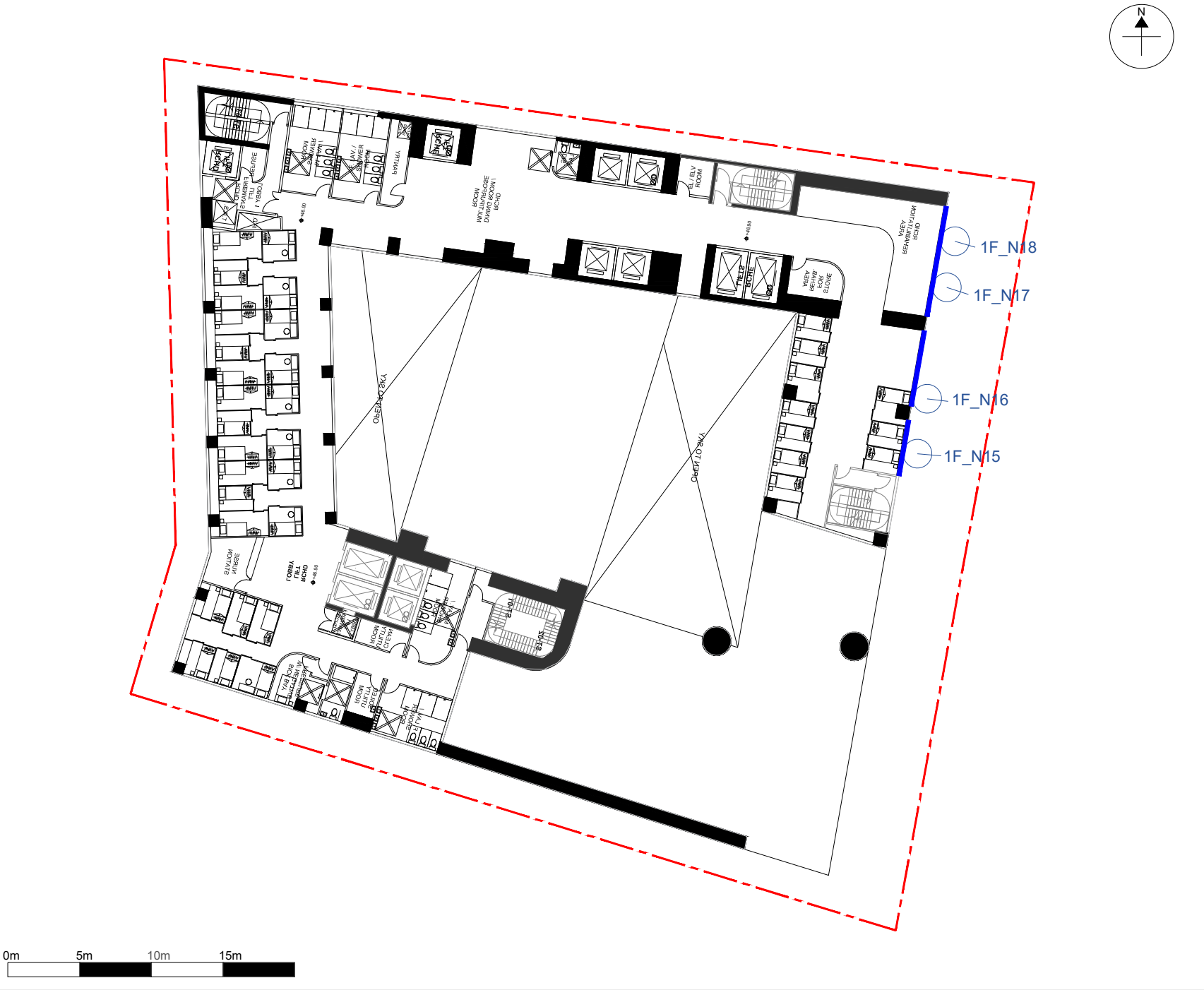

LEGEND:

Application Site

Fixed Glazing

	Prepared	Checked	Approved
Initial	LY	YS	HM
Date	20250502	20250502	20250502

Project Title

SECTION 12A APPLICATION FOR AMENDMENT TO THE APPROVED KWAI CHUNG OUTLINE ZONING PLAN NO. S/KC/32 TO REZONE THE APPLICATION SITE FROM "OTHER SPECIFIED USES" ANNOTATED "BUSINESS" TO "RESIDENTIAL (GROUP E) 2", LOT 316 IN D.D.444 AND KWAI CHUNG TOWN LOT (KTCL) 146, 97-107 WO YI HOP ROAD, NEW TERRITORIES

Figure Title

Location of Proposed Traffic Noise Mitigation Measures (1/F)

Figure No.	**Rev.**
Figure 2.2a	0

BXG

BeeXergy Consulting Limited

\\BEEXERGY_NAS\Proj.Work\23_Work\DeSpace - EA for RCHE Development at Park Sun (W23055)\PREP\Deliverables\NIA Report\RT23055-NIA-01_v2\Figure Report - NMM.dwg

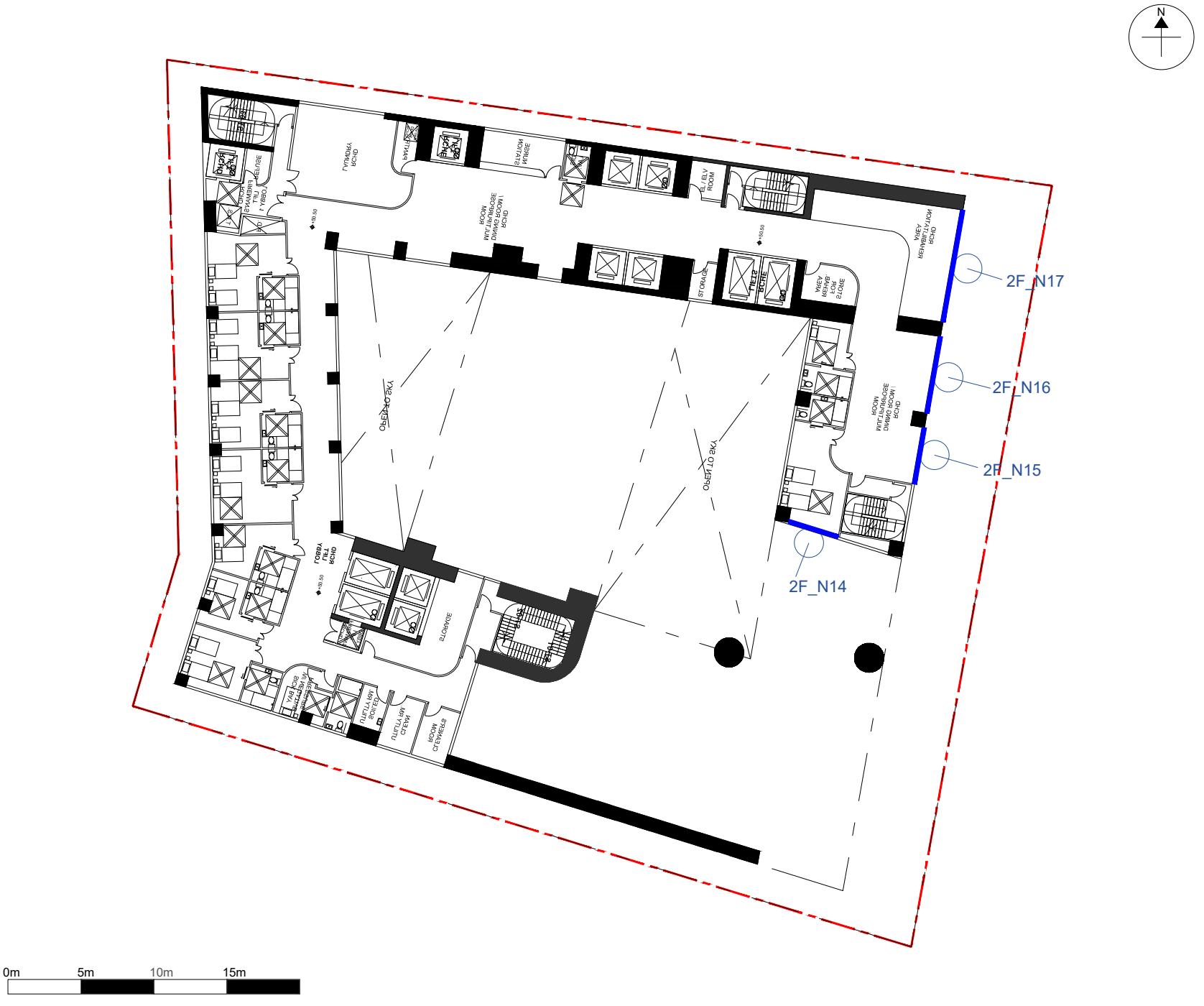

LEGEND:

Application Site

Fixed Glazing

	Prepared	Checked	Approved
Initial	LY	YS	HM
Date	20250502	20250502	20250502

Project Title

SECTION 12A APPLICATION FOR AMENDMENT TO THE APPROVED KWAI CHUNG OUTLINE ZONING PLAN NO. S/KC/32 TO REZONE THE APPLICATION SITE FROM "OTHER SPECIFIED USES" ANNOTATED "BUSINESS" TO "RESIDENTIAL (GROUP E) 2", LOT 316 IN D.D.444 AND KWAI CHUNG TOWN LOT (KTCL) 146, 97-107 WO YI HOP ROAD, NEW TERRITORIES

Figure Title

Location of Proposed Traffic Noise Mitigation Measures (2/F)

Figure No.	**Rev.**
Figure 2.2b	0

BXG

BeeXergy Consulting Limited

\\BEEXERGY_NAS\Proj.Work\23_Work\DeSpace - EA for RCHE Development at Park Sun (W23055)\PREP\Deliverables\NIA Report\RT23055-NIA-01_v2\Figure Report - NMM.dwg

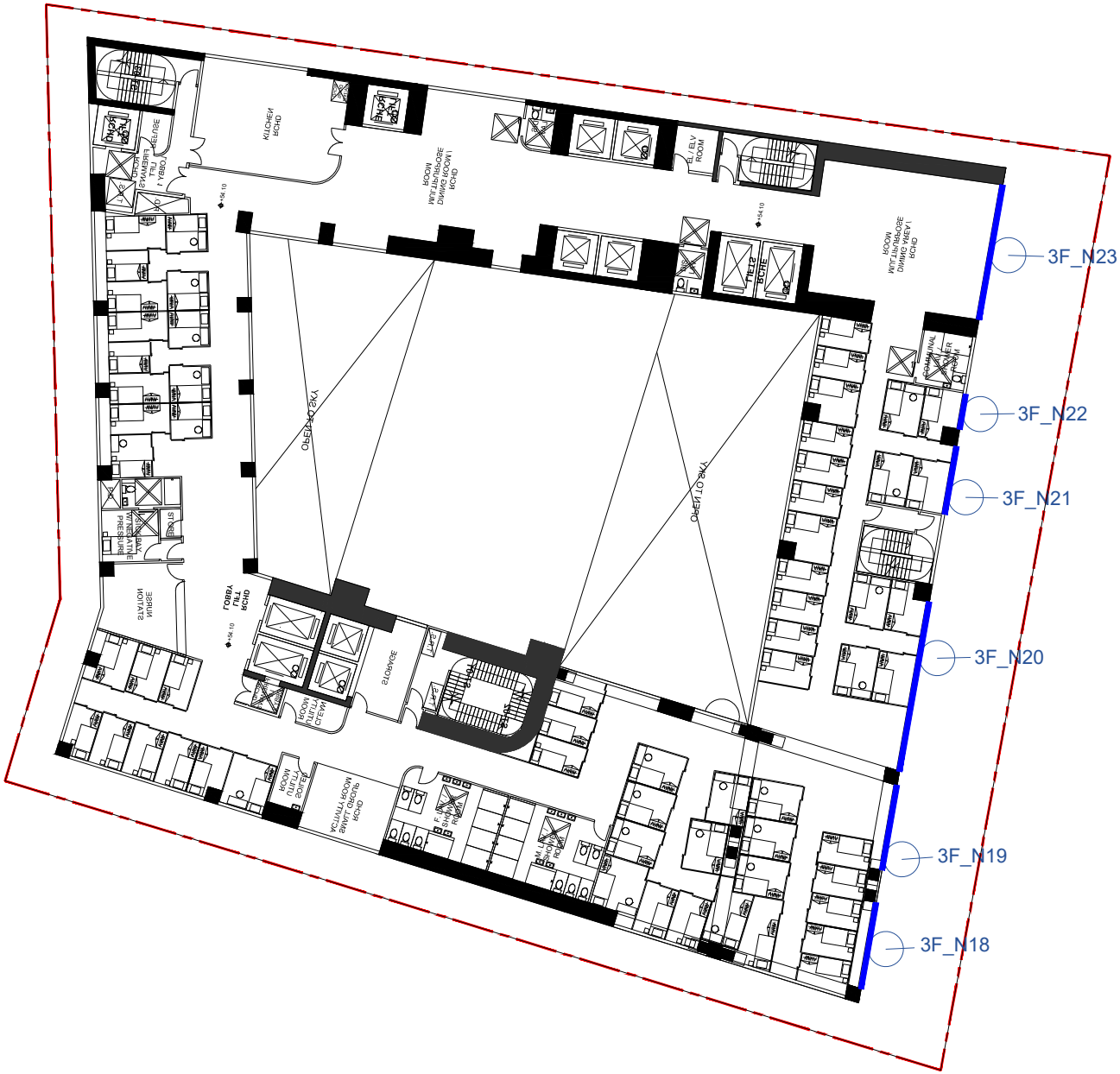

LEGEND:

Application Site

Fixed Glazing

	Prepared	Checked	Approved
Initial	LY	YS	HM
Date	20250502	20250502	20250502

Project Title

SECTION 12A APPLICATION FOR AMENDMENT TO THE APPROVED KWAI CHUNG OUTLINE ZONING PLAN NO. S/KC/32 TO REZONE THE APPLICATION SITE FROM "OTHER SPECIFIED USES" ANNOTATED "BUSINESS" TO "RESIDENTIAL (GROUP E) 2", LOT 316 IN D.D.444 AND KWAI CHUNG TOWN LOT (KTCL) 146, 97-107 WO YI HOP ROAD, NEW TERRITORIES

Figure Title

Location of Proposed Traffic Noise Mitigation Measures (3/F)

Figure No.	**Rev.**
Figure 2.2c	0

BXG

BeeXergy Consulting Limited

\\BEEXERGY_NAS\Proj.Work\23_Work\DeSpace - EA for RCHE Development at Park Sun (W23055)\PREP\Deliverables\NIA Report\RT23055-NIA-01_v2\Figure Report - NMM.dwg

LEGEND:

Application Site

Fixed Glazing

	Prepared	Checked	Approved
Initial	LY	YS	HM
Date	20250502	20250502	20250502

Project Title

SECTION 12A APPLICATION FOR AMENDMENT TO THE APPROVED KWAI CHUNG OUTLINE ZONING PLAN NO. S/KC/32 TO REZONE THE APPLICATION SITE FROM "OTHER SPECIFIED USES" ANNOTATED "BUSINESS" TO "RESIDENTIAL (GROUP E) 2", LOT 316 IN D.D.444 AND KWAI CHUNG TOWN LOT (KTCL) 146, 97-107 WO YI HOP ROAD, NEW TERRITORIES

Figure Title

Location of Proposed Traffic Noise Mitigation Measures (4/F)

Figure No.	**Rev.**
Figure 2.2d	0

BXG

BeeXergy Consulting Limited

\\BEEXERGY_NAS\Proj.Work\23_Work\DeSpace - EA for RCHE Development at Park Sun (W23055)\PREP\Deliverables\NIA Report\RT23055-NIA-01_v2\Figure Report - NMM.dwg

LEGEND:

Application Site

Fixed Glazing

	Prepared	Checked	Approved
Initial	LY	YS	HM
Date	20250502	20250502	20250502

Project Title

SECTION 12A APPLICATION FOR AMENDMENT TO THE APPROVED KWAI CHUNG OUTLINE ZONING PLAN NO. S/KC/32 TO REZONE THE APPLICATION SITE FROM "OTHER SPECIFIED USES" ANNOTATED "BUSINESS" TO "RESIDENTIAL (GROUP E) 2", LOT 316 IN D.D.444 AND KWAI CHUNG TOWN LOT (KTCL) 146, 97-107 WO YI HOP ROAD, NEW TERRITORIES

Figure Title

Location of Proposed Traffic Noise Mitigation Measures (5/F)

Figure No.	**Rev.**
Figure 2.2e	0

BXG

BeeXergy Consulting Limited

\\BEEXERGY_NAS\Proj.Work\23_Work\DeSpace - EA for RCHE Development at Park Sun (W23055)\PREP\Deliverables\NIA Report\RT23055-NIA-01_v2\Figure Report - NMM.dwg

LEGEND:

- Application Site
- Type 1 AW(BT)
- Type 2 AW(BT)

	Prepared	Checked	Approved
Initial	LY	YS	HM
Date	20250502	20250502	20250502

Project Title

SECTION 12A APPLICATION FOR AMENDMENT TO THE APPROVED KWAI CHUNG OUTLINE ZONING PLAN NO. S/KC/32 TO REZONE THE APPLICATION SITE FROM "OTHER SPECIFIED USES" ANNOTATED "BUSINESS" TO "RESIDENTIAL (GROUP E) 2", LOT 316 IN D.D.444 AND KWAI CHUNG TOWN LOT (KTCL) 146, 97-107 WO YI HOP ROAD, NEW TERRITORIES

Figure Title

Location of Proposed Traffic Noise Mitigation Measures (6/F)

Figure No.	**Rev.**
Figure 2.2f	0

BXG

BeeXergy Consulting Limited

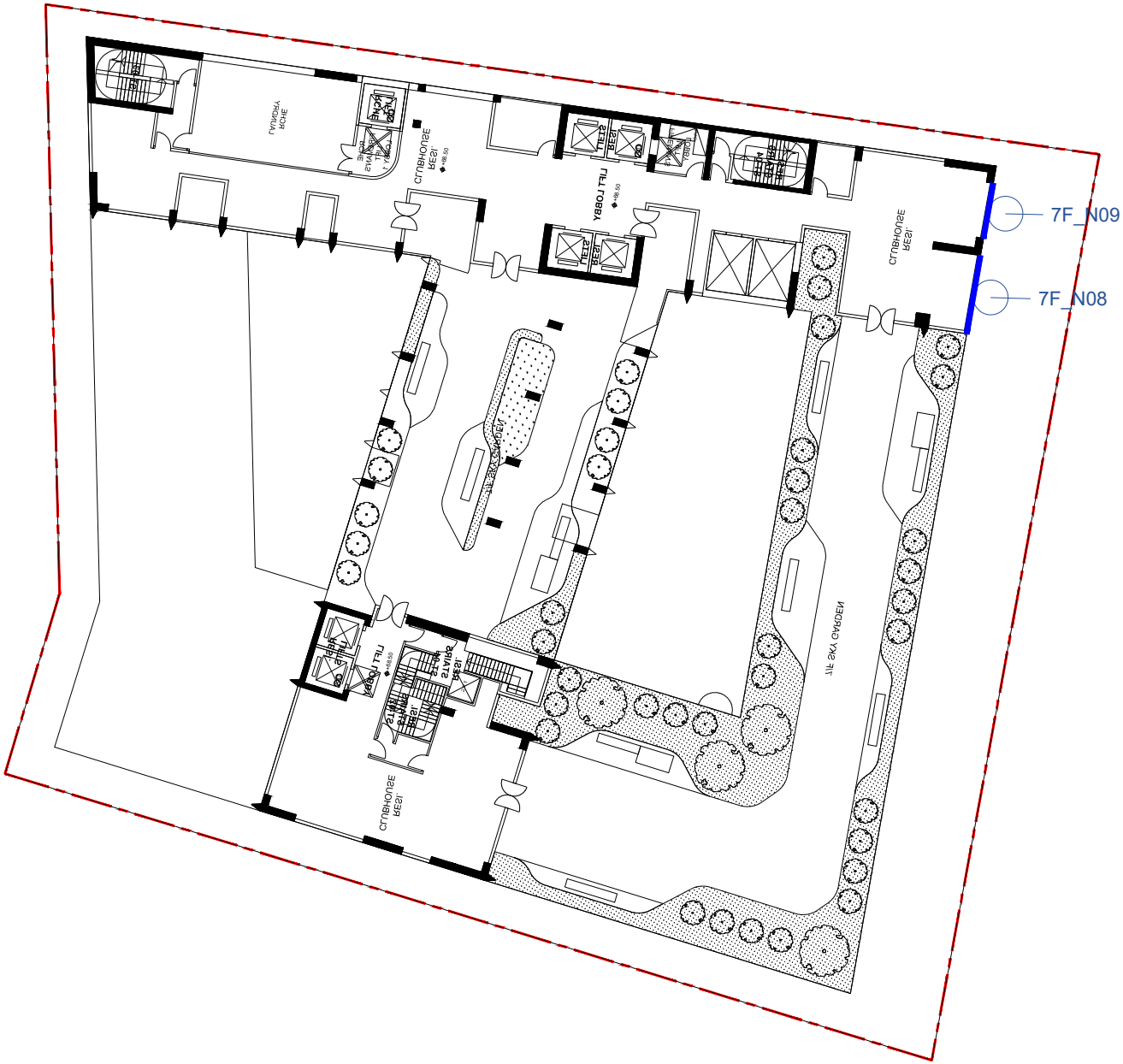

0m 5m 10m 15m

LEGEND:

Application Site

Fixed Glazing

	Prepared	Checked	Approved
Initial	LY	YS	HM
Date	20250502	20250502	20250502

Project Title

SECTION 12A APPLICATION FOR AMENDMENT TO THE APPROVED KWAI CHUNG OUTLINE ZONING PLAN NO. S/KC/32 TO REZONE THE APPLICATION SITE FROM "OTHER SPECIFIED USES" ANNOTATED "BUSINESS" TO "RESIDENTIAL (GROUP E) 2", LOT 316 IN D.D.444 AND KWAI CHUNG TOWN LOT (KTCL) 146, 97-107 WO YI HOP ROAD, NEW TERRITORIES

Figure Title

Location of Proposed Traffic Noise Mitigation Measures (7/F)

Figure No.	**Rev.**
Figure 2.2g	0

BXG

BeeXergy Consulting Limited

LEGEND:

Application Site

Fixed Glazing

	Prepared	Checked	Approved
Initial	LY	YS	HM
Date	20250502	20250502	20250502

Project Title

SECTION 12A APPLICATION FOR AMENDMENT TO THE APPROVED KWAI CHUNG OUTLINE ZONING PLAN NO. S/KC/32 TO REZONE THE APPLICATION SITE FROM "OTHER SPECIFIED USES" ANNOTATED "BUSINESS" TO "RESIDENTIAL (GROUP E) 2", LOT 316 IN D.D.444 AND KWAI CHUNG TOWN LOT (KTCL) 146, 97-107 WO YI HOP ROAD, NEW TERRITORIES

Figure Title

Location of Proposed Traffic Noise Mitigation Measures (8/F)

Figure No.	**Rev.**
Figure 2.2h	0

BXG

BeeXergy Consulting Limited

LEGEND:

- Application Site
- Type 1 AW(BT)
- Type 2 AW(BT)

	Prepared	Checked	Approved
Initial	LY	YS	HM
Date	20250502	20250502	20250502

Project Title

SECTION 12A APPLICATION FOR AMENDMENT TO THE APPROVED KWAI CHUNG OUTLINE ZONING PLAN NO. S/KC/32 TO REZONE THE APPLICATION SITE FROM "OTHER SPECIFIED USES" ANNOTATED "BUSINESS" TO "RESIDENTIAL (GROUP E) 2", LOT 316 IN D.D.444 AND KWAI CHUNG TOWN LOT (KTCL) 146, 97-107 WO YI HOP ROAD, NEW TERRITORIES

Figure Title

Location of Proposed Traffic Noise Mitigation Measures (9/F-12/F)

Figure No.	**Rev.**
Figure 2.2i	0

BXG

BeeXergy Consulting Limited

LEGEND:

- Application Site
- Type 1 AW(BT)
- Type 2 AW(BT)

	Prepared	Checked	Approved
Initial	LY	YS	HM
Date	20250502	20250502	20250502

Project Title

SECTION 12A APPLICATION FOR AMENDMENT TO THE APPROVED KWAI CHUNG OUTLINE ZONING PLAN NO. S/KC/32 TO REZONE THE APPLICATION SITE FROM "OTHER SPECIFIED USES" ANNOTATED "BUSINESS" TO "RESIDENTIAL (GROUP E) 2", LOT 316 IN D.D.444 AND KWAI CHUNG TOWN LOT (KTCL) 146, 97-107 WO YI HOP ROAD, NEW TERRITORIES

Figure Title

Location of Proposed Traffic Noise Mitigation Measures (13/F)

Figure No.	**Rev.**
Figure 2.2j	0

BXG

BeeXergy Consulting Limited

LEGEND:

- Application Site
- Type 1 AW(BT)
- Type 2 AW(BT)

	Prepared	Checked	Approved
Initial	LY	YS	HM
Date	20250502	20250502	20250502

Project Title

SECTION 12A APPLICATION FOR AMENDMENT TO THE APPROVED KWAI CHUNG OUTLINE ZONING PLAN NO. S/KC/32 TO REZONE THE APPLICATION SITE FROM "OTHER SPECIFIED USES" ANNOTATED "BUSINESS" TO "RESIDENTIAL (GROUP E) 2", LOT 316 IN D.D.444 AND KWAI CHUNG TOWN LOT (KTCL) 146, 97-107 WO YI HOP ROAD, NEW TERRITORIES

Figure Title

Location of Proposed Traffic Noise Mitigation Measures (14/F)

Figure No.	**Rev.**
Figure 2.2k	0

BXG

BeeXergy Consulting Limited

\\BEEXERGY_NAS\Proj.Work\23_Work\DeSpace - EA for RCHE Development at Park Sun (W23055)\PREP\Deliverables\NIA Report\RT23055-NIA-01_v2\Figure Report - NMM.dwg

LEGEND:

- Application Site
- Type 1 AW(BT)
- Type 2 AW(BT)

	Prepared	Checked	Approved
Initial	LY	YS	HM
Date	20250502	20250502	20250502

Project Title

SECTION 12A APPLICATION FOR AMENDMENT TO THE APPROVED KWAI CHUNG OUTLINE ZONING PLAN NO. S/KC/32 TO REZONE THE APPLICATION SITE FROM "OTHER SPECIFIED USES" ANNOTATED "BUSINESS" TO "RESIDENTIAL (GROUP E) 2", LOT 316 IN D.D.444 AND KWAI CHUNG TOWN LOT (KTCL) 146, 97-107 WO YI HOP ROAD, NEW TERRITORIES

Figure Title

Location of Proposed Traffic Noise Mitigation Measures (15/F)

Figure No.	**Rev.**
Figure 2.2l	0

BXG

BeeXergy Consulting Limited

LEGEND:

Application Site

Type 1 AW(BT)

Type 2 AW(BT)

	Prepared	Checked	Approved
Initial	LY	YS	HM
Date	20250502	20250502	20250502

Project Title

SECTION 12A APPLICATION FOR AMENDMENT TO THE APPROVED KWAI CHUNG OUTLINE ZONING PLAN NO. S/KC/32 TO REZONE THE APPLICATION SITE FROM "OTHER SPECIFIED USES" ANNOTATED "BUSINESS" TO "RESIDENTIAL (GROUP E) 2", LOT 316 IN D.D.444 AND KWAI CHUNG TOWN LOT (KTCL) 146, 97-107 WO YI HOP ROAD, NEW TERRITORIES

Figure Title

Location of Proposed Traffic Noise Mitigation Measures (16/F-18/F)

Figure No.	**Rev.**
Figure 2.2m	0

BXG

BeeXergy Consulting Limited

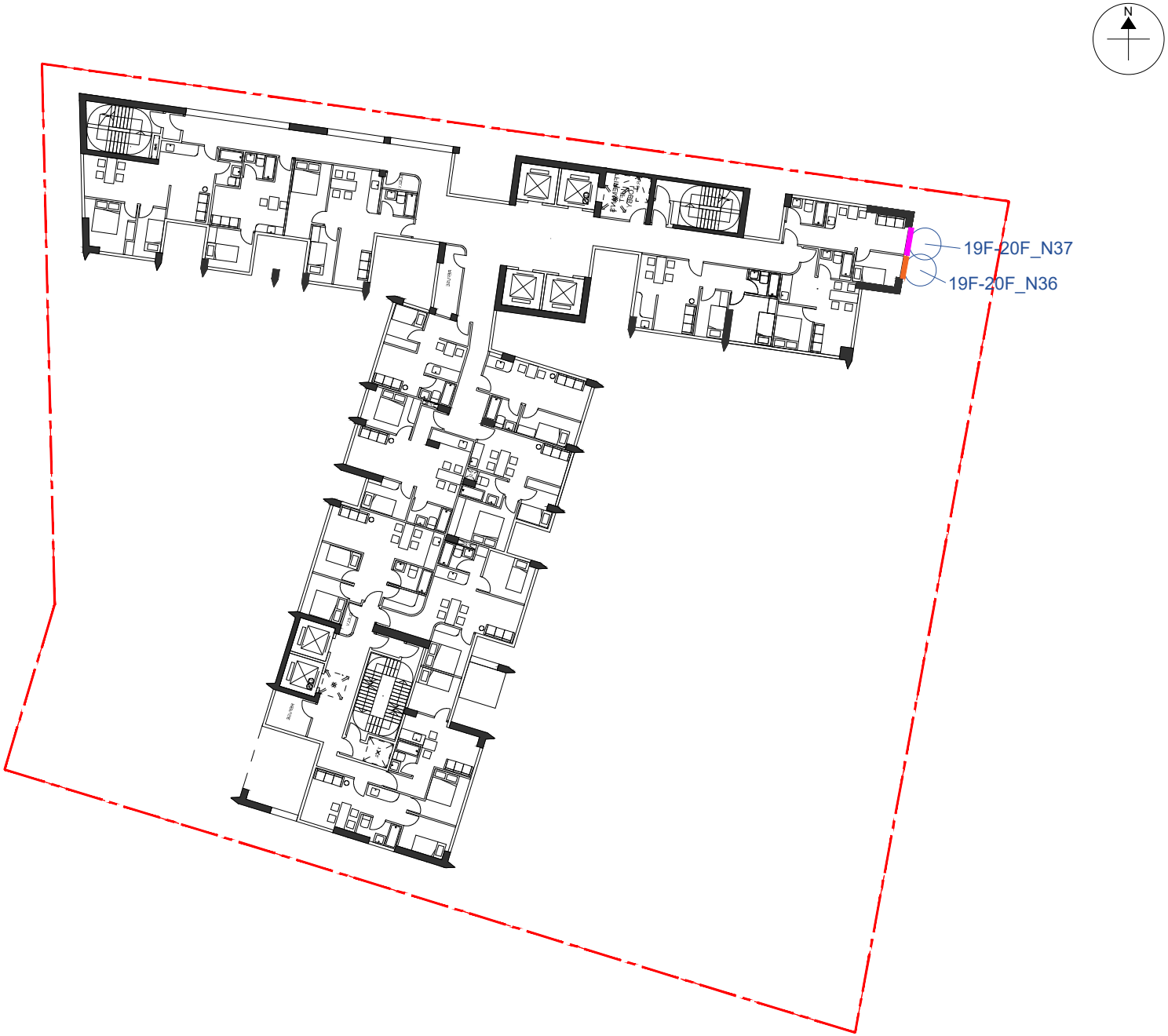

LEGEND:

- Application Site
- Type 1 AW(BT)
- Type 2 AW(BT)

	Prepared	Checked	Approved
Initial	LY	YS	HM
Date	20250502	20250502	20250502

Project Title

SECTION 12A APPLICATION FOR AMENDMENT TO THE APPROVED KWAI CHUNG OUTLINE ZONING PLAN NO. S/KC/32 TO REZONE THE APPLICATION SITE FROM "OTHER SPECIFIED USES" ANNOTATED "BUSINESS" TO "RESIDENTIAL (GROUP E) 2", LOT 316 IN D.D.444 AND KWAI CHUNG TOWN LOT (KTCL) 146, 97-107 WO YI HOP ROAD, NEW TERRITORIES

Figure Title

Location of Proposed Traffic Noise Mitigation Measures (19/F-20/F)

Figure No.	**Rev.**
Figure 2.2n	0

BXG

BeeXergy Consulting Limited

LEGEND:

- Application Site
- Type 1 AW(BT)
- Type 2 AW(BT)

	Prepared	Checked	Approved
Initial	LY	YS	HM
Date	20250502	20250502	20250502

Project Title

SECTION 12A APPLICATION FOR AMENDMENT TO THE APPROVED KWAI CHUNG OUTLINE ZONING PLAN NO. S/KC/32 TO REZONE THE APPLICATION SITE FROM "OTHER SPECIFIED USES" ANNOTATED "BUSINESS" TO "RESIDENTIAL (GROUP E) 2", LOT 316 IN D.D.444 AND KWAI CHUNG TOWN LOT (KTCL) 146, 97-107 WO YI HOP ROAD, NEW TERRITORIES

Figure Title

Location of Proposed Traffic Noise Mitigation Measures (21/F-22/F)

Figure No.	**Rev.**
Figure 2.2o	0

BXG

BeeXergy Consulting Limited

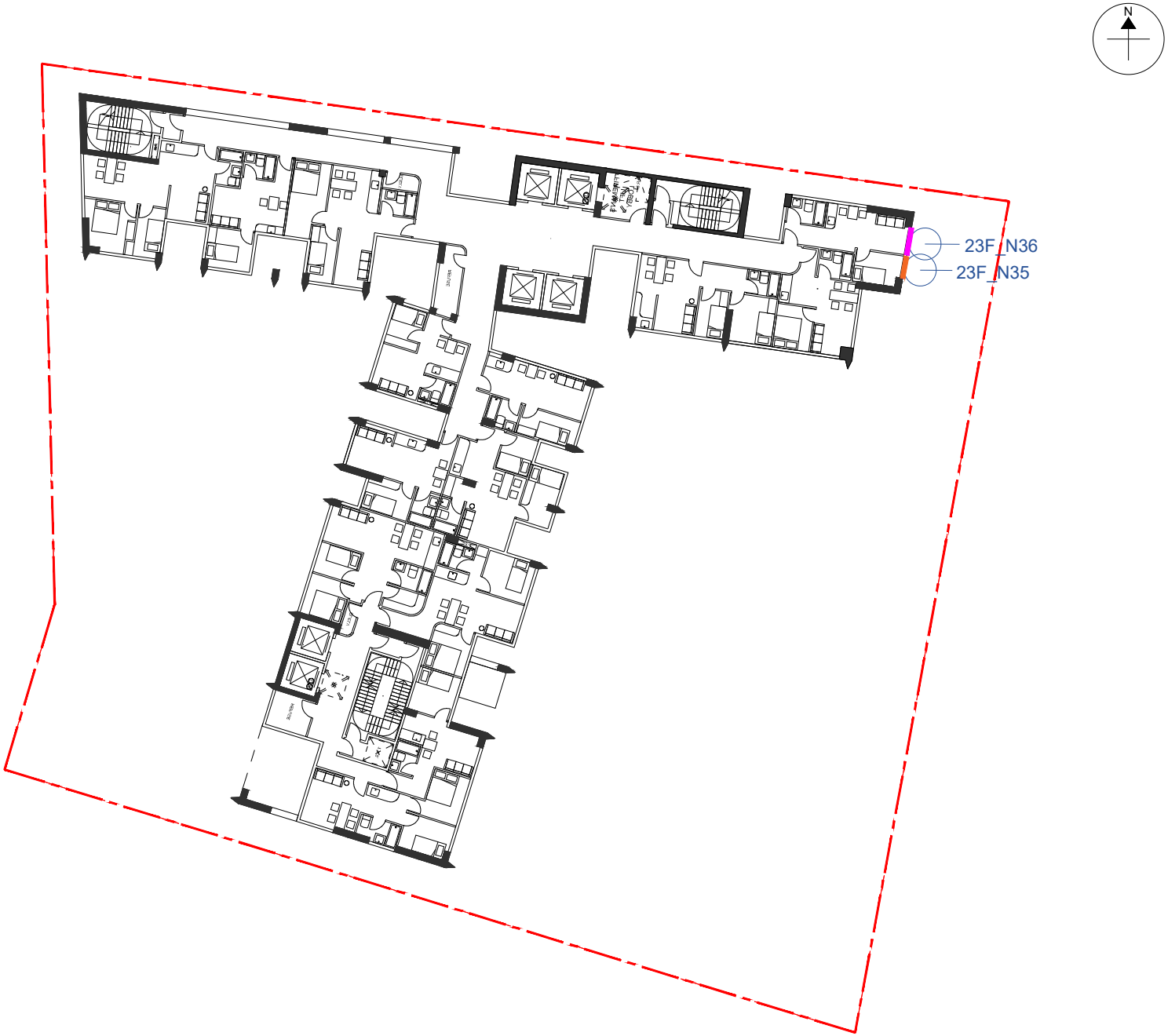

LEGEND:

- Application Site
- Type 1 AW(BT)
- Type 2 AW(BT)

	Prepared	Checked	Approved
Initial	LY	YS	HM
Date	20250502	20250502	20250502

Project Title

SECTION 12A APPLICATION FOR AMENDMENT TO THE APPROVED KWAI CHUNG OUTLINE ZONING PLAN NO. S/KC/32 TO REZONE THE APPLICATION SITE FROM "OTHER SPECIFIED USES" ANNOTATED "BUSINESS" TO "RESIDENTIAL (GROUP E) 2", LOT 316 IN D.D.444 AND KWAI CHUNG TOWN LOT (KTCL) 146, 97-107 WO YI HOP ROAD, NEW TERRITORIES

Figure Title

Location of Proposed Traffic Noise Mitigation Measures (23/F)

Figure No.	**Rev.**
Figure 2.2p	0

BXG

BeeXergy Consulting Limited

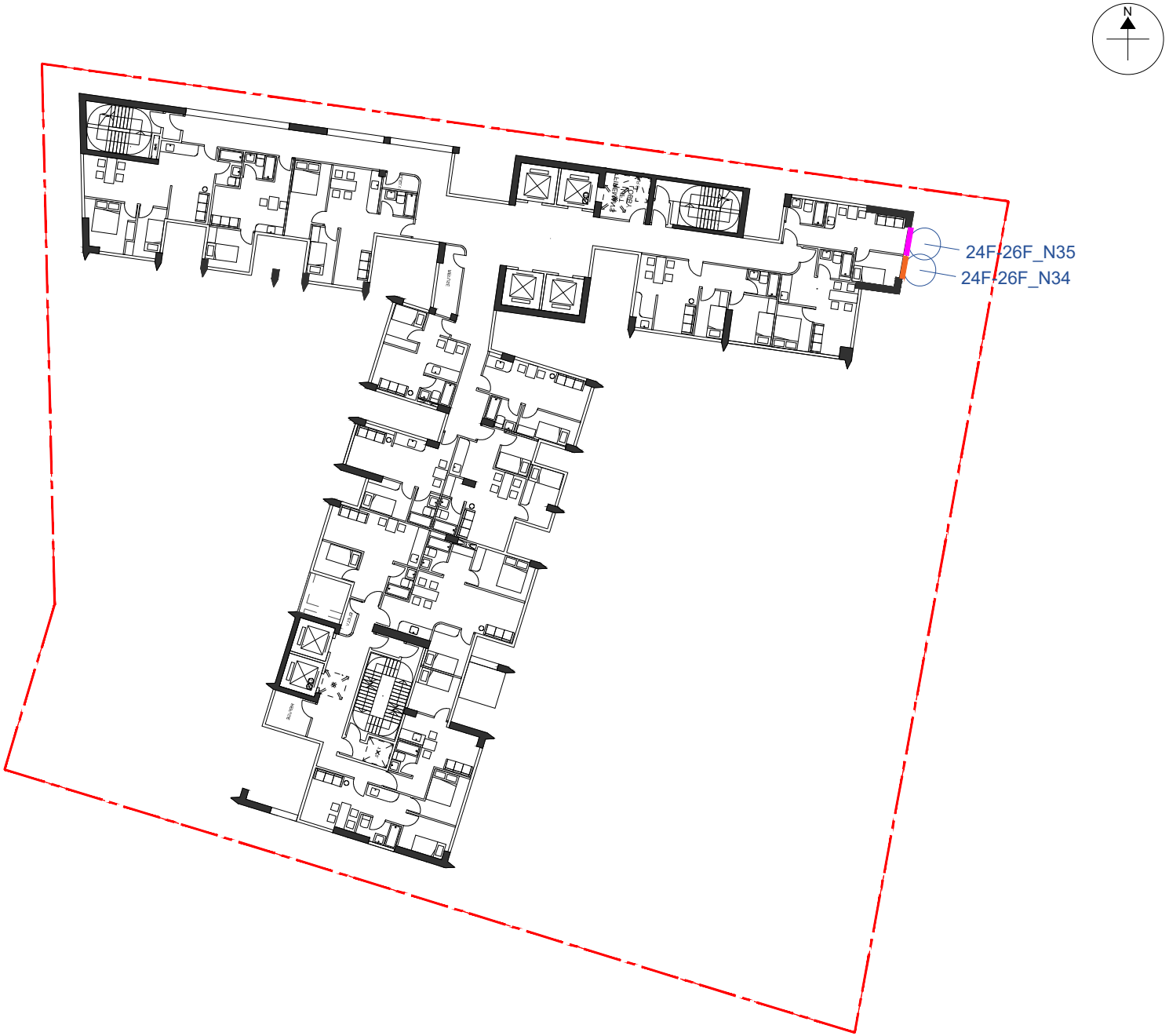

LEGEND:

- Application Site
- Type 1 AW(BT)
- Type 2 AW(BT)

	Prepared	Checked	Approved
Initial	LY	YS	HM
Date	20250502	20250502	20250502

Project Title

SECTION 12A APPLICATION FOR AMENDMENT TO THE APPROVED KWAI CHUNG OUTLINE ZONING PLAN NO. S/KC/32 TO REZONE THE APPLICATION SITE FROM "OTHER SPECIFIED USES" ANNOTATED "BUSINESS" TO "RESIDENTIAL (GROUP E) 2", LOT 316 IN D.D.444 AND KWAI CHUNG TOWN LOT (KTCL) 146, 97-107 WO YI HOP ROAD, NEW TERRITORIES

Figure Title

Location of Proposed Traffic Noise Mitigation Measures (24/F-26/F)

Figure No.	**Rev.**
Figure 2.2q	0

BXG

BeeXergy Consulting Limited

FIGURE 3.1A – 3.1E

LOCATION OF MAJOR FIXED NOISE SOURCES AND REPRESENTATIVE NOISE SENSITIVE RECEIVERS FOR FIXED NOISE IMPACT ASSESSMENT

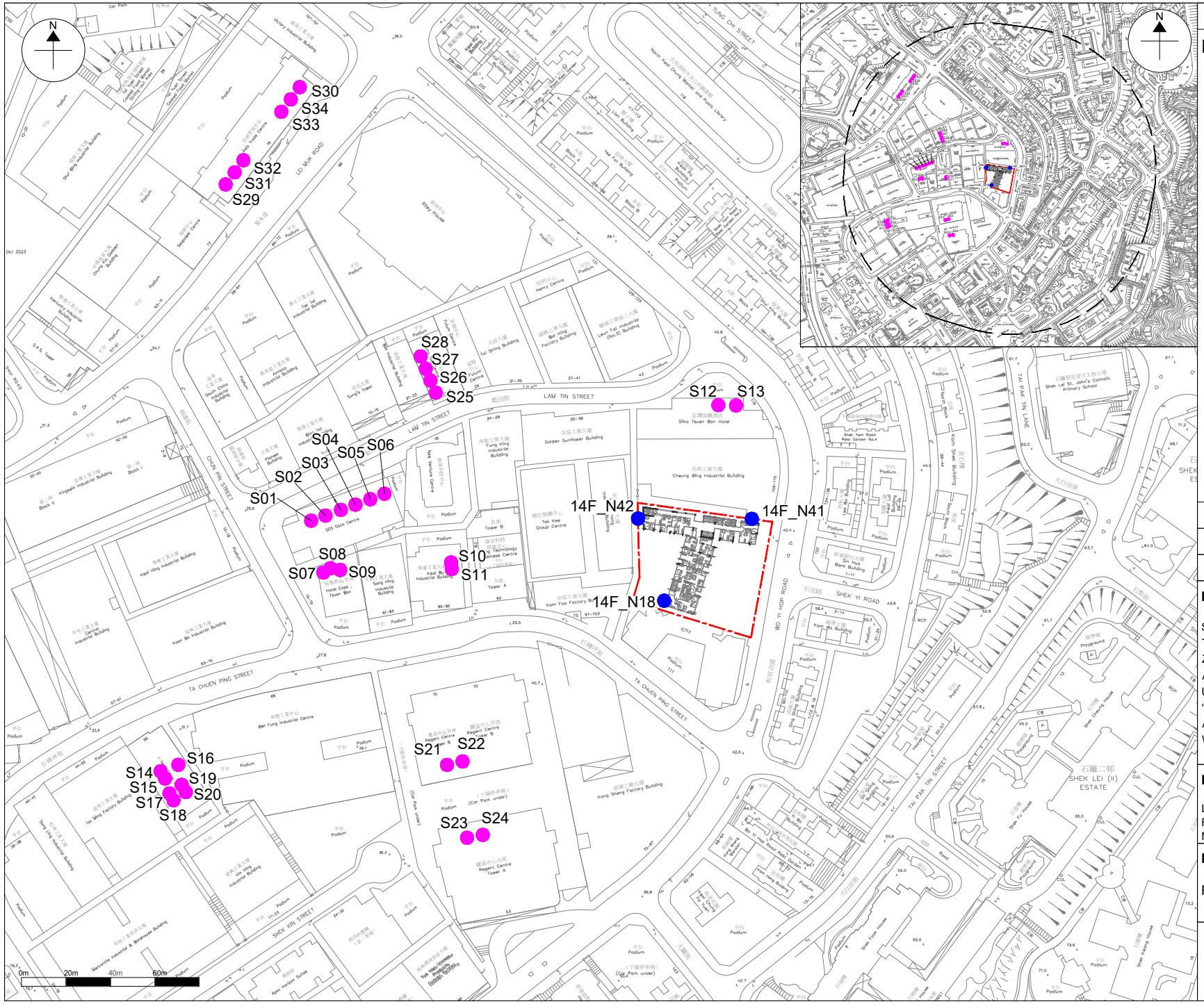

LEGEND:

- Application Site
- 300m Assessment Area
- Major Fixed Noise Source
- Representative NSR

	Prepared	Checked	Approved
Initial	LY	YS	HM
Date	20250502	20250505	20250502

Project Title

SECTION 12A APPLICATION FOR AMENDMENT TO THE APPROVED KWAI CHUNG OUTLINE ZONING PLAN NO. S/KC/32 TO REZONE THE APPLICATION SITE FROM "OTHER SPECIFIED USES" ANNOTATED "BUSINESS" TO "RESIDENTIAL (GROUP E) 2", LOT 316 IN D.D.444 AND KWAI CHUNG TOWN LOT (KTCL) 146, 97-107 WO YI HOP ROAD, NEW TERRITORIES

Figure Title

Location of Major Fixed Noise Sources and Representative Noise Sensitive Receivers for Fixed Noise Impact Assessment (14/F)

Figure No.	Rev.
Figure 3.1a	0

BXG

BeeXergy Consulting Limited

\\BEEXERGY_NAS\Proj.Work\23_Work\DeSpace - EA for RCHE Development at Park Sun (W23055)\PREP\Deliverables\NIA Report\RT23055-NIA-01_v2\Figure\Figure 3.1a-3.1e fixed plant location.dwg

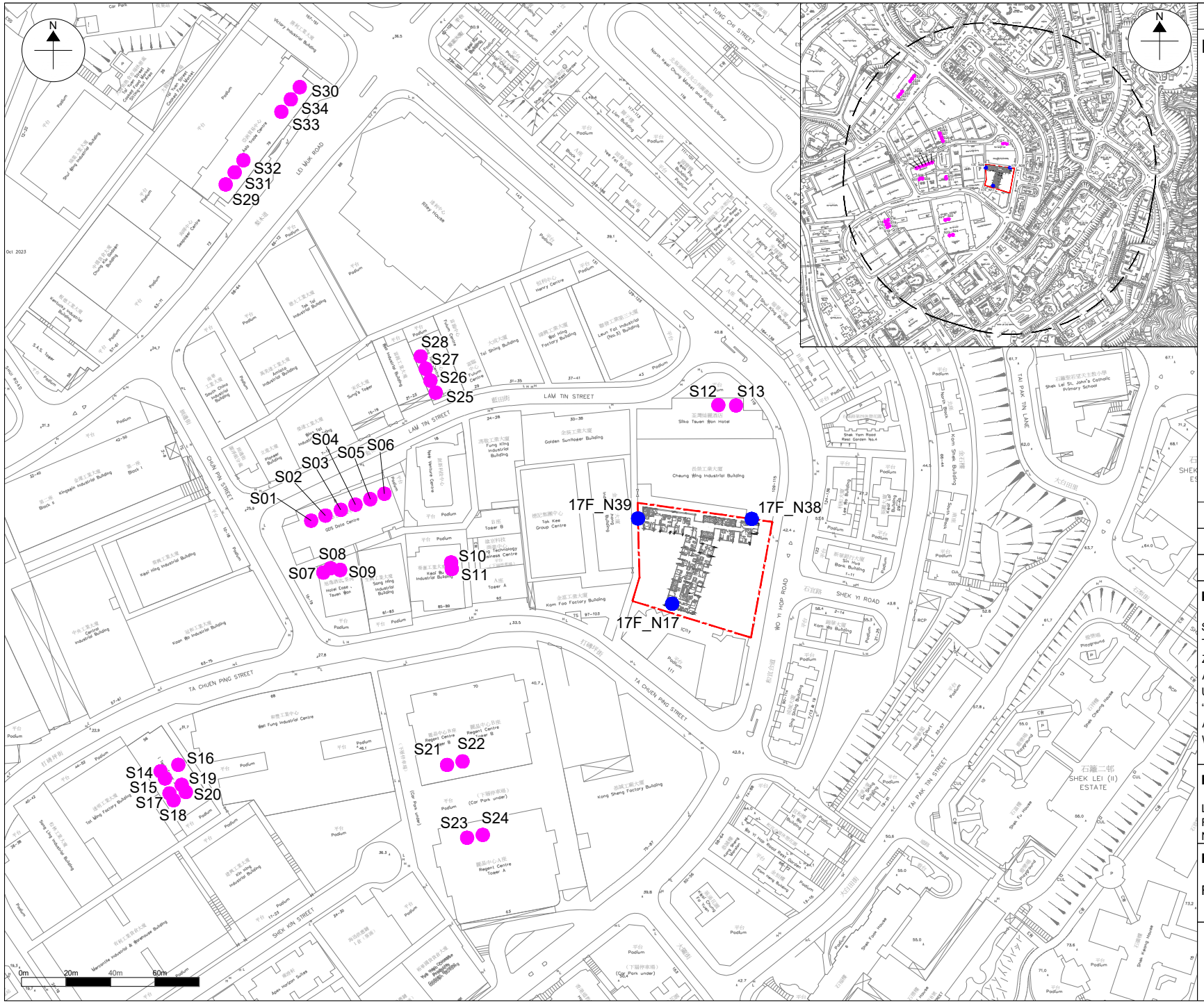

LEGEND:

- Application Site
- 300m Assessment Area
- Major Fixed Noise Source
- Representative NSR

	Prepared	Checked	Approved
Initial	LY	YS	HM
Date	20250502	20250502	20250502

Project Title

SECTION 12A APPLICATION FOR AMENDMENT TO THE APPROVED KWAI CHUNG OUTLINE ZONING PLAN NO. S/KC/32 TO REZONE THE APPLICATION SITE FROM "OTHER SPECIFIED USES" ANNOTATED "BUSINESS" TO "RESIDENTIAL (GROUP E) 2", LOT 316 IN D.D.444 AND KWAI CHUNG TOWN LOT (KTCL) 146, 97-107 WO YI HOP ROAD, NEW TERRITORIES

Figure Title

Location of Major Fixed Noise Sources and Representative Noise Sensitive Receivers for Fixed Noise Impact Assessment (17/F)

Figure No.	Rev.
Figure 3.1b	0

BXG

BeeXergy Consulting Limited

\\BEEXERGY_NAS\Proj.Work\23_Work\DeSpace - EA for RCHE Development at Park Sun (W23055)\PREP\Deliverables\NIA Report\RT23055-NIA-01_v2\Figure\Figure 3.1a-3.1e fixed plant location.dwg

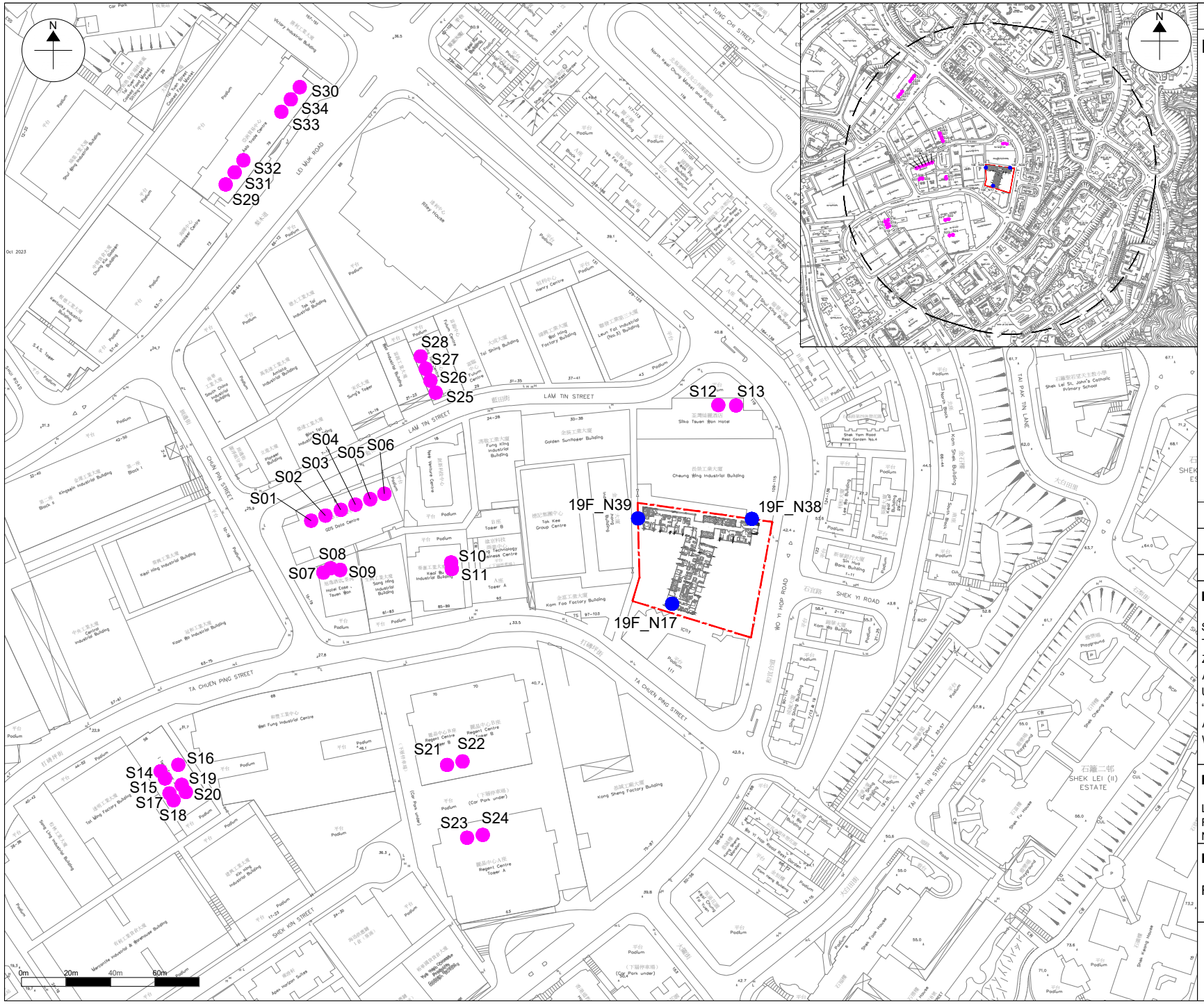

Copyright by BeeXergy Consulting Limited

LEGEND:

- Application Site
- 300m Assessment Area
- Major Fixed Noise Source
- Representative NSR

	Prepared	Checked	Approved
Initial	LY	YS	HM
Date	20250502	20250502	20250502

Project Title

SECTION 12A APPLICATION FOR AMENDMENT TO THE APPROVED KWAI CHUNG OUTLINE ZONING PLAN NO. S/KC/32 TO REZONE THE APPLICATION SITE FROM "OTHER SPECIFIED USES" ANNOTATED "BUSINESS" TO "RESIDENTIAL (GROUP E) 2", LOT 316 IN D.D.444 AND KWAI CHUNG TOWN LOT (KTCL) 146, 97-107 WO YI HOP ROAD, NEW TERRITORIES

Figure Title

Location of Major Fixed Noise Sources and Representative Noise Sensitive Receivers for Fixed Noise Impact Assessment (19/F)

Figure No.	Rev.
Figure 3.1c	0

BXG

BeeXergy Consulting Limited

\\BEEXERGY_NAS\Proj.Work\23_Work\DeSpace - EA for RCHE Development at Park Sun (W23055)\PREP\Deliverables\NIA Report\RT23055-NIA-01_v2\Figure\Figure 3.1a-3.1e fixed plant location.dwg

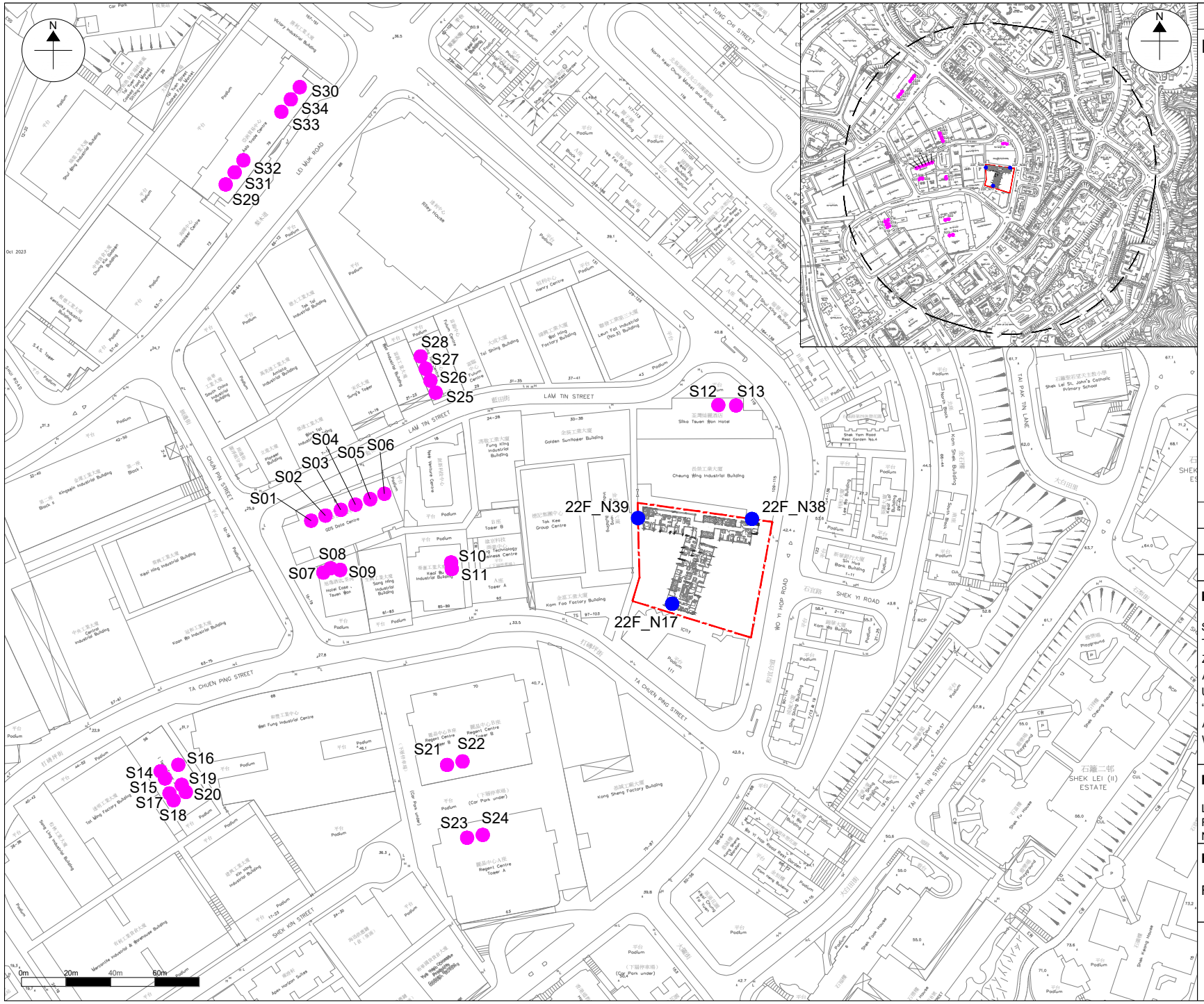

LEGEND:

- Application Site
- 300m Assessment Area
- Major Fixed Noise Source
- Representative NSR

	Prepared	Checked	Approved
Initial	LY	YS	HM
Date	20250502	20250502	20250502

Project Title

SECTION 12A APPLICATION FOR AMENDMENT TO THE APPROVED KWAI CHUNG OUTLINE ZONING PLAN NO. S/KC/32 TO REZONE THE APPLICATION SITE FROM "OTHER SPECIFIED USES" ANNOTATED "BUSINESS" TO "RESIDENTIAL (GROUP E) 2", LOT 316 IN D.D.444 AND KWAI CHUNG TOWN LOT (KTCL) 146, 97-107 WO YI HOP ROAD, NEW TERRITORIES

Figure Title

Location of Major Fixed Noise Sources and Representative Noise Sensitive Receivers for Fixed Noise Impact Assessment (22/F)

Figure No.	Rev.
Figure 3.1d	0

BXG

BeeXergy Consulting Limited

\\BEEXERGY_NAS\Proj.Work\23_Work\DeSpace - EA for RCHE Development at Park Sun (W23055)\PREP\Deliverables\NIA Report\RT23055-NIA-01_v2\Figure\Figure 3.1a-3.1e fixed plant location.dwg

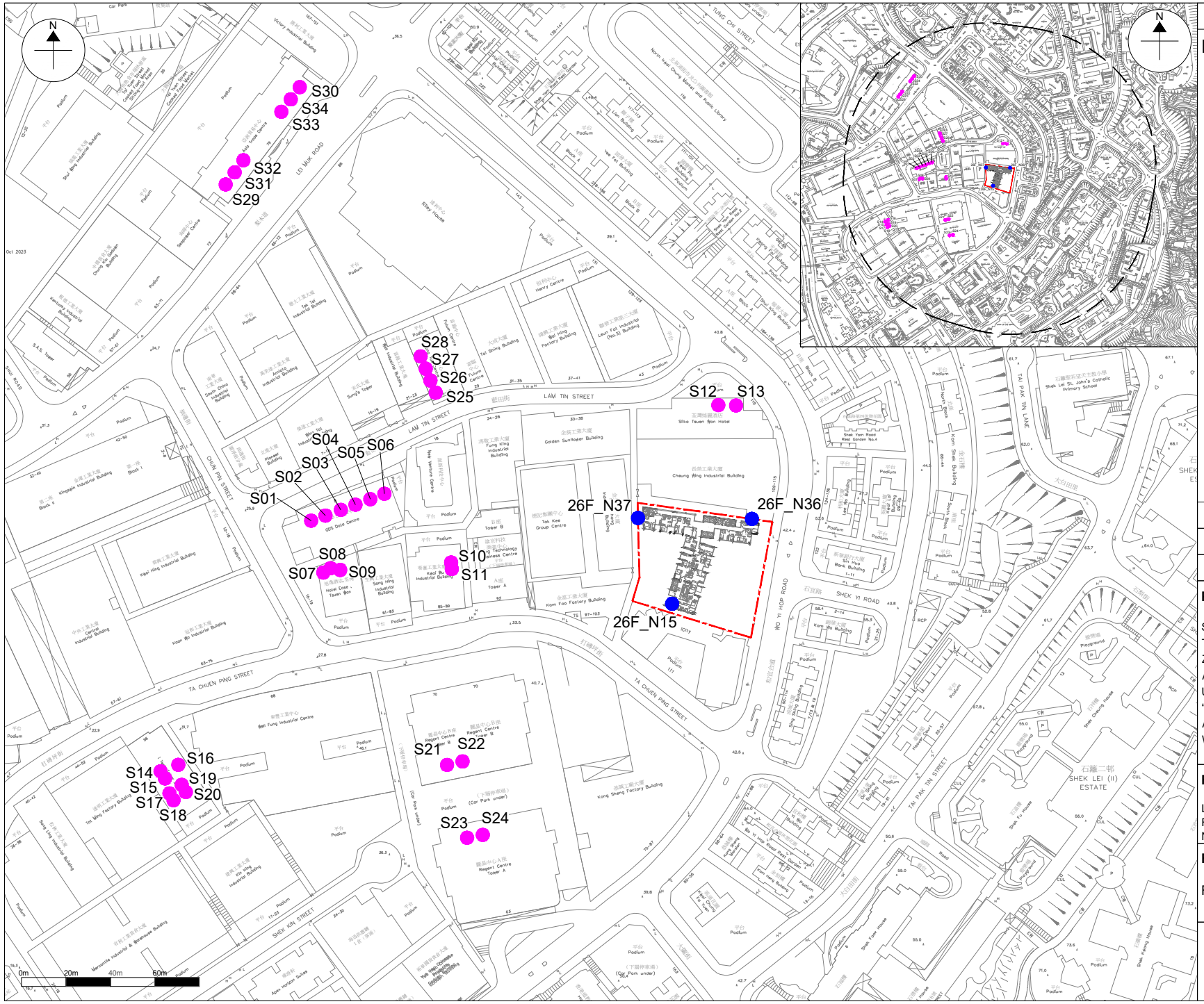

LEGEND:

- Application Site
- 300m Assessment Area
- Major Fixed Noise Source
- Representative NSR

	Prepared	Checked	Approved
Initial	LY	YS	HM
Date	20250502	20250502	20250502

Project Title

SECTION 12A APPLICATION FOR AMENDMENT TO THE APPROVED KWAI CHUNG OUTLINE ZONING PLAN NO. S/KC/32 TO REZONE THE APPLICATION SITE FROM "OTHER SPECIFIED USES" ANNOTATED "BUSINESS" TO "RESIDENTIAL (GROUP E) 2", LOT 316 IN D.D.444 AND KWAI CHUNG TOWN LOT (KTCL) 146, 97-107 WO YI HOP ROAD, NEW TERRITORIES

Figure Title

Location of Major Fixed Noise Sources and Representative Noise Sensitive Receivers for Fixed Noise Impact Assessment (26/F)

Figure No.	Rev.
Figure 3.1e	0

BXG

BeeXergy Consulting Limited

\\BEEXERGY_NAS\Proj.Work\23_Work\DeSpace - EA for RCHE Development at Park Sun (W23055)\PREP\Deliverables\NIA Report\RT23055-NIA-01_v2\Figure\Figure 3.1a-3.1e fixed plant location.dwg

APPENDIX 1.1
MASTER LAYOUT PLAN

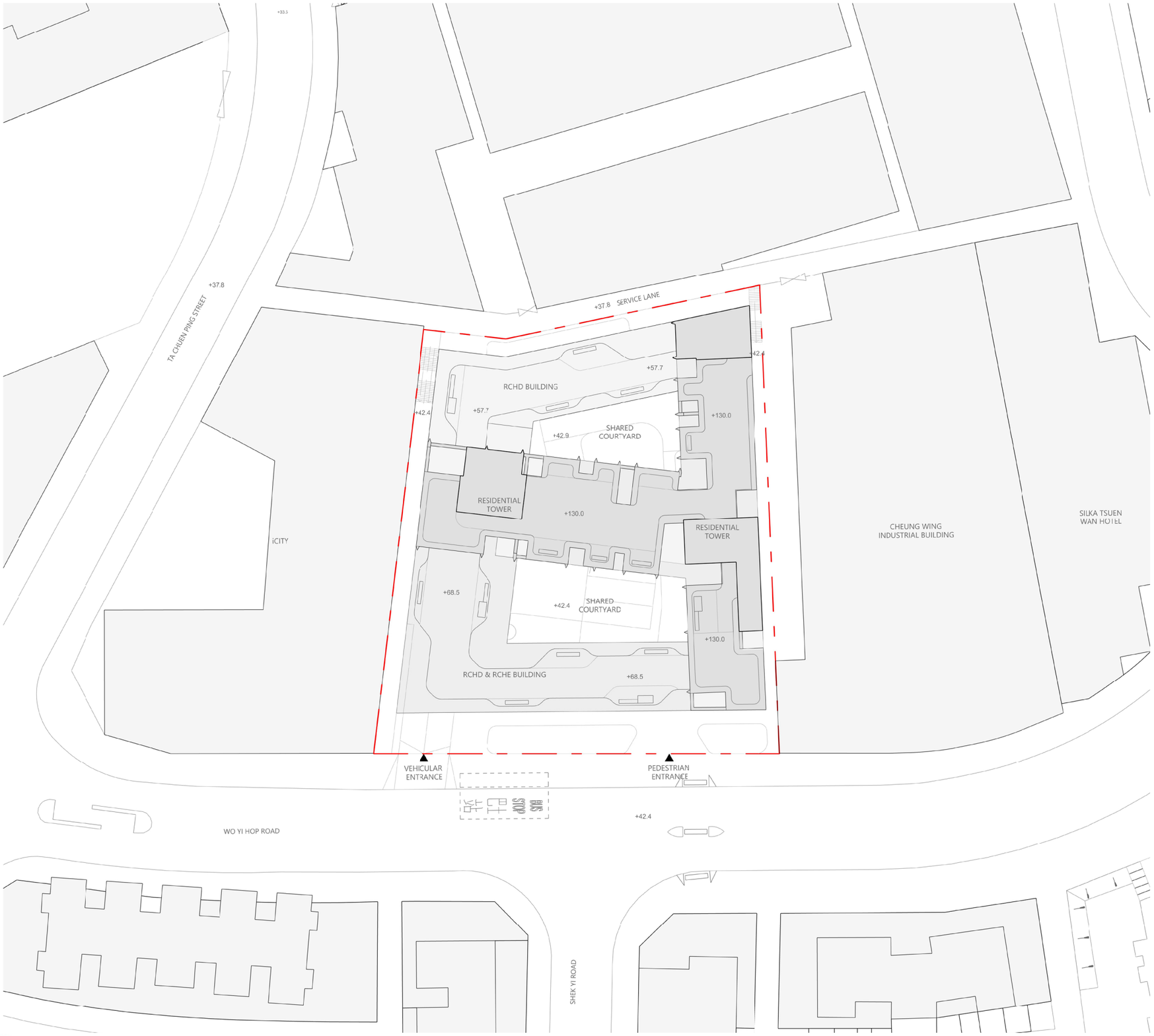

MASTER LAYOUT PLAN

升
建
築
index
architecture
limited

www.indexarchitecture.com

DeSPACE (International) Limited

RESIDENTIAL
RCHE
RCHD
SHARED USE

0 1 2 5 m

1:250 @A3

index
architecture
limited

Flat 12, 6/F,
Decca Industrial Centre,
12 Kut Shing Street, Chai Wan,
Hong Kong SAR
Tel: (852) 2155 1007
Fax: (852) 2155 1008
Email: info@indexarchitecture.com

FOR INFORMATION

Issue	Description	Date
-	ISSUE	10-04-2024

ALL DIMENSION TO BE VERIFIED BY CONTRACTOR

Project no: 22013

Project: Park Sun Building Redevelopment

Client: Kin Ying Co. Ltd.

Address: Wo Yi Hop Road, Kwai Chung Hong Kong

Drawn: OC Scale: 1:250@A3

Title: BASEMENT 1/F Layout Plan

Sheet: Rev: -

RESIDENTIAL
RCHE
RCHD
SHARED USE
SHOP

0 1 2 5 m

1:250 @A3

index
architecture
limited

Flat 12, 6/F,
Decca Industrial Centre,
12 Kut Shing Street, Chai Wan,
Hong Kong SAR
Tel: (852) 2155 1007
Fax: (852) 2155 1008
Email: info@indexarchitecture.com

FOR INFORMATION

Issue	Description	Date
-	ISSUE	10-04-2024

ALL DIMENSION TO BE VERIFIED BY CONTRACTOR

Project no: 22013

Project: Park Sun Building Redevelopment

Client: Kin Ying Co. Ltd.

Address: Wo Yi Hop Road, Kwai Chung Hong Kong

Drawn: OC Scale: 1:250@A3

Title: LOWER GROUND 1/F Layout Plan

Sheet: Rev: -

RESIDENTIAL

RCHE

RCHD

SHARED USE

SHOP

GRASS

SHRUB

0 1 2 5 m

1:250 @A3

index architecture limited

Flat 12, 6/F,
Decca Industrial Centre,
12 Kut Shing Street, Chai Wan,
Hong Kong SAR
Tel: (852) 2155 1007
Fax: (852) 2155 1008
Email: info@indexarchitecture.com

FOR INFORMATION

Issue	Description	Date
-	ISSUE	10-04-2024

ALL DIMENSION TO BE VERIFIED BY CONTRACTOR

Project no: 22013

Project: Park Sun Building Redevelopment

Client: Kin Ying Co. Ltd.

Address: Wo Yi Hop Road, Kwai Chung Hong Kong

Drawn: OC Scale: 1:250@A3

Title: G/F Layout Plan

Sheet: Rev: -

RCHD

SHARED USE

0 1 2 5 m

1:250 @A3

index
architecture
limited

Flat 12, 6/F,
Decca Industrial Centre,
12 Kut Shing Street, Chai Wan,
Hong Kong SAR
Tel: (852) 2155 1007
Fax: (852) 2155 1008
Email: info@indexarchitecture.com

FOR INFORMATION

Issue	Description	Date
-	ISSUE	10-04-2024

ALL DIMENSION TO BE VERIFIED BY CONTRACTOR

Project no: 22013

Project: Park Sun Building Redevelopment

Client: Kin Ying Co. Ltd.

Address: Wo Yi Hop Road, Kwai Chung Hong Kong

Drawn: OC Scale: 1:250@A3

Title: 1/F Layout Plan

Sheet: Rev: -

0 1 2 5 m

1:250 @A3

index
architecture
limited

Flat 12, 6/F,
Decca Industrial Centre,
12 Kut Shing Street, Chai Wan,
Hong Kong SAR
Tel: (852) 2155 1007
Fax: (852) 2155 1008
Email: info@indexarchitecture.com

FOR INFORMATION

Issue	Description	Date
-	ISSUE	10-04-2024

ALL DIMENSION TO BE VERIFIED BY CONTRACTOR

Project no: 22013

Project: Park Sun Building Redevelopment

Client: Kin Ying Co. Ltd.

Address: Wo Yi Hop Road, Kwai Chung
Hong Kong

Drawn: OC Scale: 1:250@A3

Title: 2/F Layout Plan

Sheet: Rev: -

RCHD

SHARED USE

0 1 2 5 m

1:250 @A3

index
architecture
limited

Flat 12, 6/F,
Decca Industrial Centre,
12 Kut Shing Street, Chai Wan,
Hong Kong SAR
Tel: (852) 2155 1007
Fax: (852) 2155 1008
Email: info@indexarchitecture.com

FOR INFORMATION

Issue	Description	Date
-	ISSUE	10-04-2024

ALL DIMENSION TO BE VERIFIED BY CONTRACTOR

Project no: 22013

Project: Park Sun Building Redevelopment

Client: Kin Ying Co. Ltd.

Address: Wo Yi Hop Road, Kwai Chung Hong Kong

Drawn: OC Scale: 1:250@A3

Title: 3F Layout Plan

Sheet: Rev: -

RCHE

SHARED USE

GRASS

SHRUB

0 1 2 5 m

1:250 @A3

index
architecture
limited

Flat 12, 6/F,
Decca Industrial Centre,
12 Kut Shing Street, Chai Wan,
Hong Kong SAR
Tel: (852) 2155 1007
Fax: (852) 2155 1008
Email: info@indexarchitecture.com

FOR INFORMATION

Issue	Description	Date
-	ISSUE	10-04-2024

ALL DIMENSION TO BE VERIFIED BY CONTRACTOR

Project no: 22013

Project: Park Sun Building Redevelopment

Client: Kin Ying Co. Ltd.

Address: Wo Yi Hop Road, Kwai Chung
Hong Kong

Drawn: OC Scale: 1:250@A3

Title: 4/F Layout Plan

Sheet: Rev: -

RCHE

SHARED USE

0 1 2 5 m

1:250 @A3

index
architecture
limited

Flat 12, 6/F,
Decca Industrial Centre,
12 Kut Shing Street, Chai Wan,
Hong Kong SAR
Tel: (852) 2155 1007
Fax: (852) 2155 1008
Email: info@indexarchitecture.com

FOR INFORMATION

Issue	Description	Date
-	ISSUE	10-04-2024

ALL DIMENSION TO BE VERIFIED BY CONTRACTOR

Project no: 22013

Project: Park Sun Building Redevelopment

Client: Kin Ying Co. Ltd.

Address: Wo Yi Hop Road, Kwai Chung Hong Kong

Drawn: OC Scale: 1:250@A3

Title: 5/F Layout Plan

Sheet: Rev: -

RCHE

SHARED USE

0 1 2 5 m

1:250 @A3

index
architecture
limited

Flat 12, 6/F,
Decca Industrial Centre,
12 Kut Shing Street, Chai Wan,
Hong Kong SAR
Tel: (852) 2155 1007
Fax: (852) 2155 1008
Email: info@indexarchitecture.com

FOR INFORMATION

Issue	Description	Date
-	ISSUE	10-04-2024

ALL DIMENSION TO BE VERIFIED BY CONTRACTOR

Project no: 22013

Project: Park Sun Building Redevelopment

Client: Kin Ying Co. Ltd.

Address: Wo Yi Hop Road, Kwai Chung Hong Kong

Drawn: OC Scale: 1:250@A3

Title: 6/F Layout Plan

Sheet: Rev: -

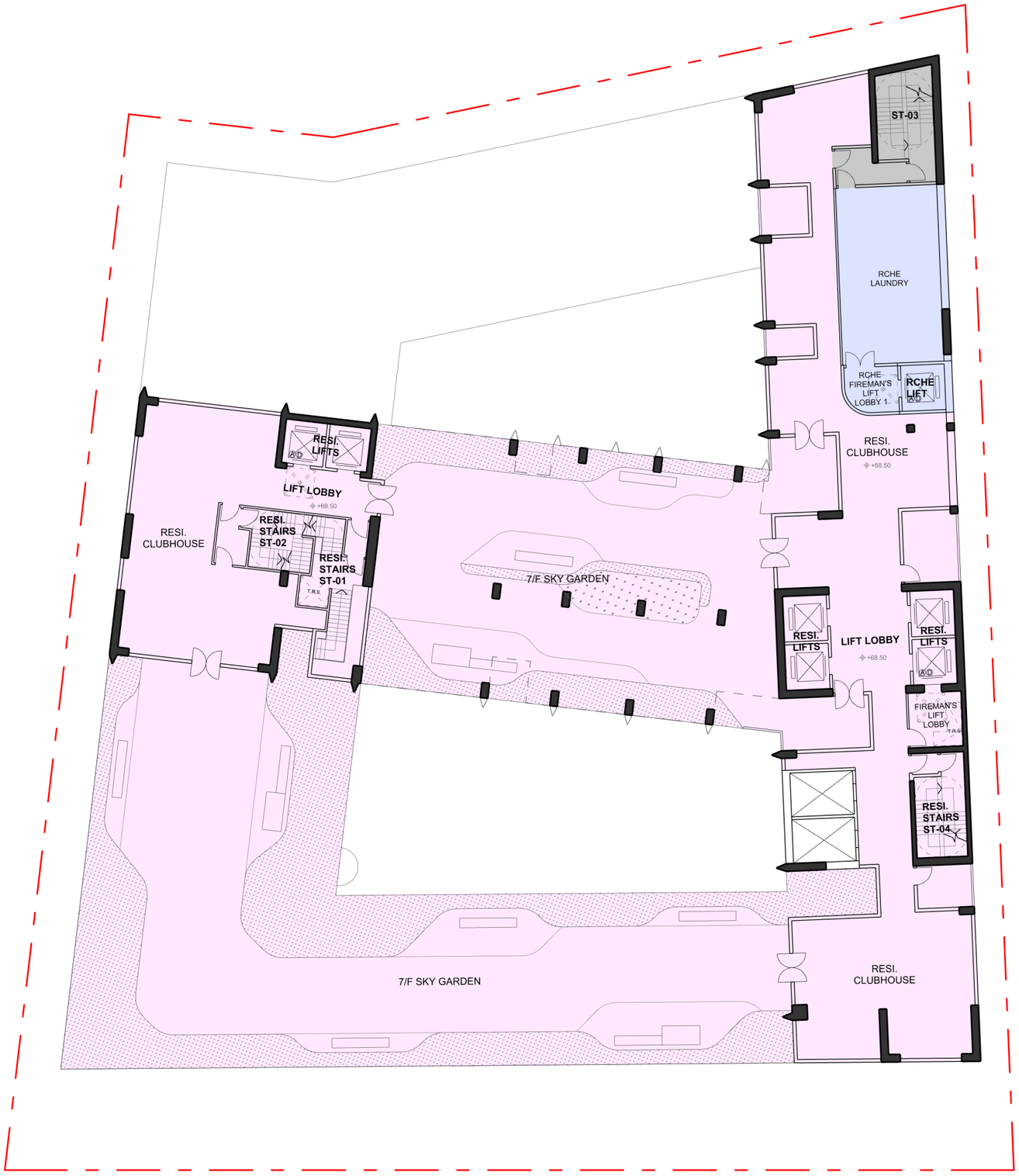

RESIDENTIAL

RCHE

SHARED USE

GRASS

SHRUB

0 1 2 5 m

1:250 @A3

index
architecture
limited

Flat 12, 6/F,
Decca Industrial Centre,
12 Kut Shing Street, Chai Wan,
Hong Kong SAR
Tel: (852) 2155 1007
Fax: (852) 2155 1008
Email: info@indexarchitecture.com

FOR INFORMATION

Issue	Description	Date
-	ISSUE	10-04-2024

ALL DIMENSION TO BE VERIFIED BY CONTRACTOR

Project no: 22013

Project: Park Sun Building Redevelopment

Client: Kin Ying Co. Ltd.

Address: Wo Yi Hop Road, Kwai Chung
Hong Kong

Drawn: OC Scale: 1:250@A3

Title: 7/F Layout Plan

Sheet: Rev: -

RESIDENTIAL

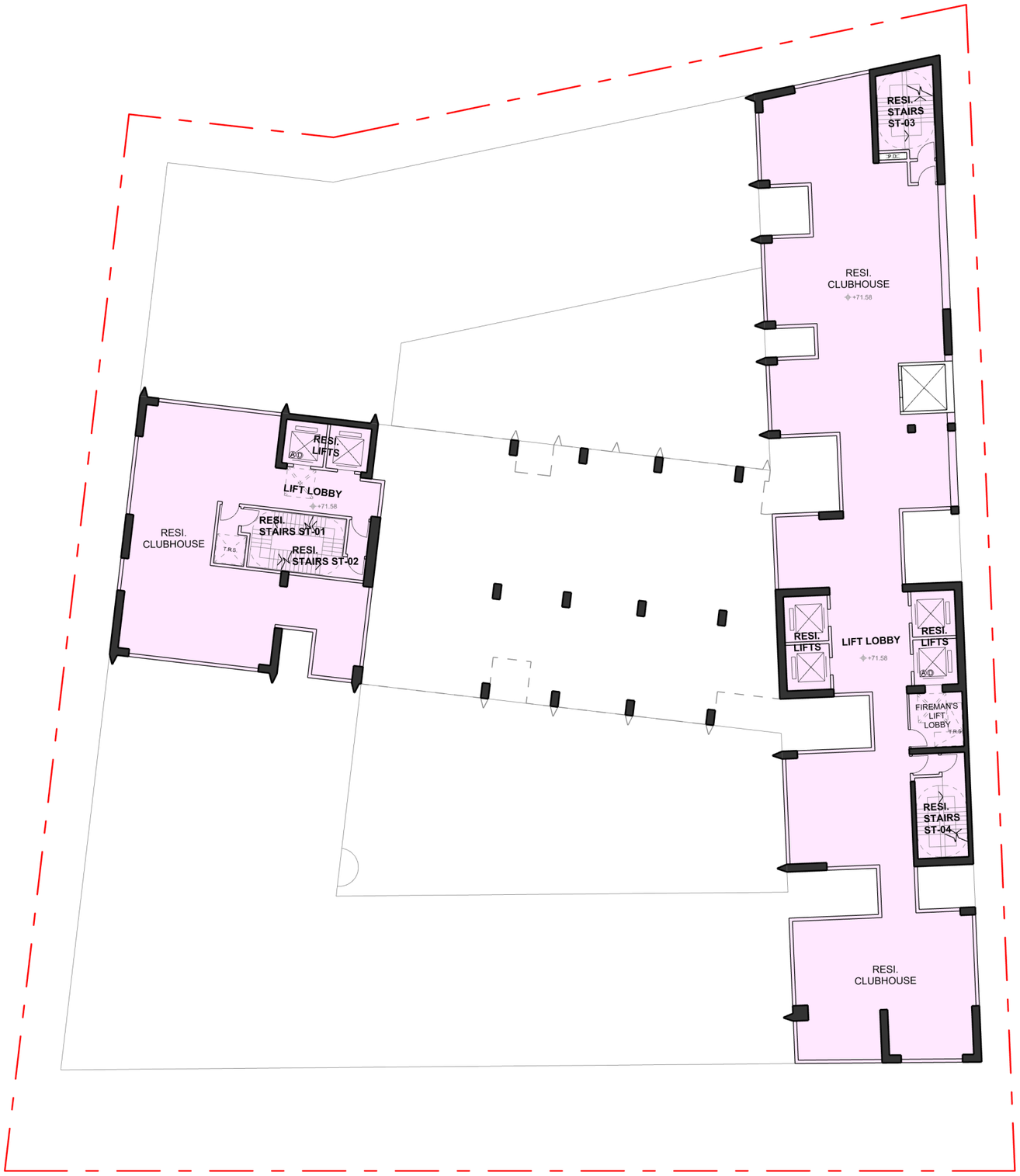

0 1 2 5 m

1:250 @A3

index
architecture
limited

Flat 12, 6/F,
Decca Industrial Centre,
12 Kut Shing Street, Chai Wan,
Hong Kong SAR
Tel: (852) 2155 1007
Fax: (852) 2155 1008
Email: info@indexarchitecture.com

FOR INFORMATION

Issue	Description	Date
-	ISSUE	10-04-2024

ALL DIMENSION TO BE VERIFIED BY CONTRACTOR

Project no: 22013

Project: Park Sun Building Redevelopment

Client: Kin Ying Co. Ltd.

Address: Wo Yi Hop Road, Kwai Chung
Hong Kong

Drawn: OC Scale: 1:250@A3

Title: 8/F Layout Plan

Sheet: Rev: -

RESIDENTIAL

Floor Level:

9/F: +74.65 10/F: +77.73 11/F: +80.80 12/F: +83.88

0 1 2 5 m

1:250 @A3

index
architecture
limited

Flat 12, 6/F,
Decca Industrial Centre,
12 Kut Shing Street, Chai Wan,
Hong Kong SAR
Tel: (852) 2155 1007
Fax: (852) 2155 1008
Email: info@indexarchitecture.com

FOR INFORMATION

Issue	Description	Date
-	ISSUE	10-04-2024

ALL DIMENSION TO BE VERIFIED BY CONTRACTOR

Project no: 22013

Project: Park Sun Building Redevelopment

Client: Kin Ying Co. Ltd.

Address: Wo Yi Hop Road, Kwai Chung Hong Kong

Drawn: OC Scale: 1:250@A3

Title: 9-12/F Layout Plan

Sheet: Rev: -

RESIDENTIAL

Floor Level:
13/F: +86.95

0 1 2 5 m

1:250 @A3

index
architecture
limited

Flat 12, 6/F,
Decca Industrial Centre,
12 Kut Shing Street, Chai Wan,
Hong Kong SAR
Tel: (852) 2155 1007
Fax: (852) 2155 1008
Email: info@indexarchitecture.com

FOR INFORMATION

Issue	Description	Date
-	ISSUE	10-04-2024

ALL DIMENSION TO BE VERIFIED BY CONTRACTOR

Project no: 22013

Project: Park Sun Building Redevelopment

Client: Kin Ying Co. Ltd.

Address: Wo Yi Hop Road, Kwai Chung
Hong Kong

Drawn: OC Scale: 1:250@A3

Title: 13/F Layout Plan

Sheet: Rev: -

RESIDENTIAL

Floor Level:
14/F: +90.03

0 1 2 5 m

1:250 @A3

index
architecture
limited

Flat 12, 6/F,
Decca Industrial Centre,
12 Kut Shing Street, Chai Wan,
Hong Kong SAR
Tel: (852) 2155 1007
Fax: (852) 2155 1008
Email: info@indexarchitecture.com

FOR INFORMATION

Issue	Description	Date
-	ISSUE	10-04-2024

ALL DIMENSION TO BE VERIFIED BY CONTRACTOR

Project no: 22013

Project: Park Sun Building Redevelopment

Client: Kin Ying Co. Ltd.

Address: Wo Yi Hop Road, Kwai Chung
Hong Kong

Drawn: OC Scale: 1:250@A3

Title: 14/F Layout Plan

Sheet: Rev: -

RESIDENTIAL

Floor Level:
15/F: +93.10

0 1 2 5 m

1:250 @A3

index
architecture
limited

Flat 12, 6/F,
Decca Industrial Centre,
12 Kut Shing Street, Chai Wan,
Hong Kong SAR
Tel: (852) 2155 1007
Fax: (852) 2155 1008
Email: info@indexarchitecture.com

FOR INFORMATION

Issue	Description	Date
-	ISSUE	10-04-2024

ALL DIMENSION TO BE VERIFIED BY CONTRACTOR

Project no: 22013

Project: Park Sun Building Redevelopment

Client: Kin Ying Co. Ltd.

Address: Wo Yi Hop Road, Kwai Chung
Hong Kong

Drawn: OC Scale: 1:250@A3

Title: 15/F Layout Plan

Sheet: Rev: -

RESIDENTIAL

Floor Level:

16/F: +96.18 17/F: +99.25 18/F: +102.33

0 1 2 5 m

1:250 @A3

index
architecture
limited

Flat 12, 6/F,
Decca Industrial Centre,
12 Kut Shing Street, Chai Wan,
Hong Kong SAR
Tel: (852) 2155 1007
Fax: (852) 2155 1008
Email: info@indexarchitecture.com

FOR INFORMATION

Issue	Description	Date
-	ISSUE	10-04-2024

ALL DIMENSION TO BE VERIFIED BY CONTRACTOR

Project no: 22013

Project: Park Sun Building Redevelopment

Client: Kin Ying Co. Ltd.

Address: Wo Yi Hop Road, Kwai Chung Hong Kong

Drawn: OC Scale: 1:250@A3

Title: 16-18/F Layout Plan

Sheet: Rev: -

RESIDENTIAL

Floor Level:
19/F: +105.40 20/F: +108.48

0 1 2 5 m

1:250 @A3

index
architecture
limited

Flat 12, 6/F,
Decca Industrial Centre,
12 Kut Shing Street, Chai Wan,
Hong Kong SAR
Tel: (852) 2155 1007
Fax: (852) 2155 1008
Email: info@indexarchitecture.com

FOR INFORMATION

Issue	Description	Date
-	ISSUE	10-04-2024

ALL DIMENSION TO BE VERIFIED BY CONTRACTOR

Project no: 22013

Project: Park Sun Building Redevelopment

Client: Kin Ying Co. Ltd.

Address: Wo Yi Hop Road, Kwai Chung
Hong Kong

Drawn: OC Scale: 1:250@A3

Title: 19-20/F Layout Plan

Sheet: Rev: -

RESIDENTIAL

Floor Level:
21/F: +111.55 22/F: +114.63

0 1 2 5 m

1:250 @A3

index
architecture
limited

Flat 12, 6/F,
Decca Industrial Centre,
12 Kut Shing Street, Chai Wan,
Hong Kong SAR
Tel: (852) 2155 1007
Fax: (852) 2155 1008
Email: info@indexarchitecture.com

FOR INFORMATION

Issue	Description	Date
-	ISSUE	10-04-2024

ALL DIMENSION TO BE VERIFIED BY CONTRACTOR

Project no: 22013

Project: Park Sun Building Redevelopment

Client: Kin Ying Co. Ltd.

Address: Wo Yi Hop Road, Kwai Chung Hong Kong

Drawn: OC Scale: 1:250@A3

Title: 21-22/F Layout Plan

Sheet: Rev: -

RESIDENTIAL

Floor Level:
23/F: +117.70

0 1 2 5 m

1:250 @A3

index
architecture
limited

Flat 12, 6/F,
Decca Industrial Centre,
12 Kut Shing Street, Chai Wan,
Hong Kong SAR
Tel: (852) 2155 1007
Fax: (852) 2155 1008
Email: info@indexarchitecture.com

FOR INFORMATION

Issue	Description	Date
-	ISSUE	10-04-2024

ALL DIMENSION TO BE VERIFIED BY CONTRACTOR

Project no: 22013

Project: Park Sun Building Redevelopment

Client: Kin Ying Co. Ltd.

Address: Wo Yi Hop Road, Kwai Chung Hong Kong

Drawn: OC Scale: 1:250@A3

Title: 23/F Layout Plan

Sheet: Rev: -

RESIDENTIAL

Floor Level:
24/F: +120.78 25/F: +123.85 26/F: +126.93

0 1 2 5 m

1:250 @A3

index
architecture
limited

Flat 12, 6/F,
Decca Industrial Centre,
12 Kut Shing Street, Chai Wan,
Hong Kong SAR
Tel: (852) 2155 1007
Fax: (852) 2155 1008
Email: info@indexarchitecture.com

FOR INFORMATION

Issue	Description	Date
-	ISSUE	10-04-2024

ALL DIMENSION TO BE VERIFIED BY CONTRACTOR

Project no: 22013

Project: Park Sun Building Redevelopment

Client: Kin Ying Co. Ltd.

Address: Wo Yi Hop Road, Kwai Chung Hong Kong

Drawn: OC Scale: 1:250@A3

Title: 24-26/F Layout Plan

Sheet: Rev: -

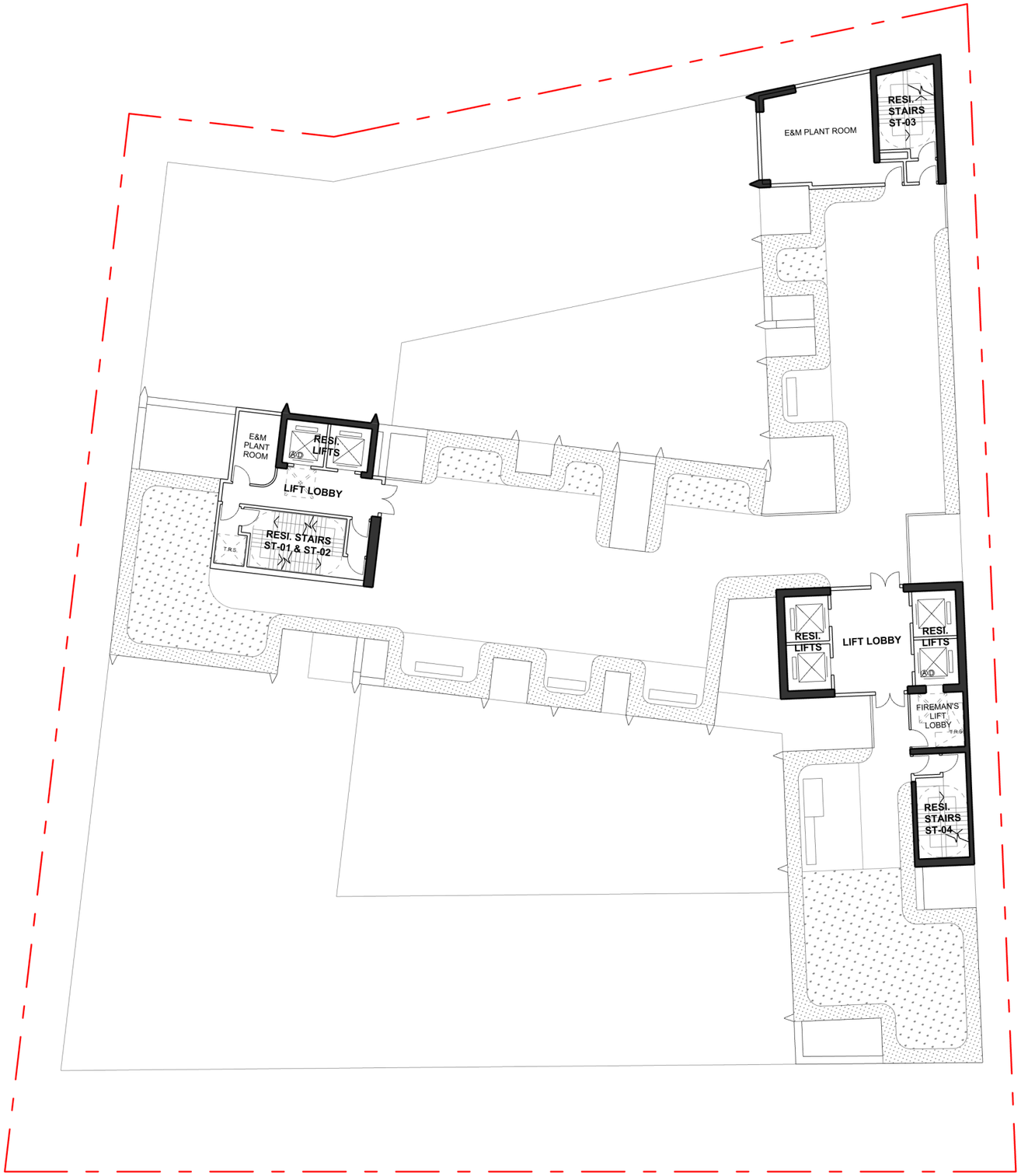

GRASS

SHRUB

0 1 2 5 m

1:250 @A3

Floor Level:
R/F: +130.00

index
architecture
limited

Flat 12, 6/F,
Decca Industrial Centre,
12 Kut Shing Street, Chai Wan,
Hong Kong SAR
Tel: (852) 2155 1007
Fax: (852) 2155 1008
Email: info@indexarchitecture.com

FOR INFORMATION

Issue	Description	Date
-	ISSUE	10-04-2024

ALL DIMENSION TO BE VERIFIED BY CONTRACTOR

Project no: 22013

Project: Park Sun Building Redevelopment

Client: Kin Ying Co. Ltd.

Address: Wo Yi Hop Road, Kwai Chung Hong Kong

Drawn: OC Scale: 1:250@A3

Title: Roof Layout Plan

Sheet: Rev: -

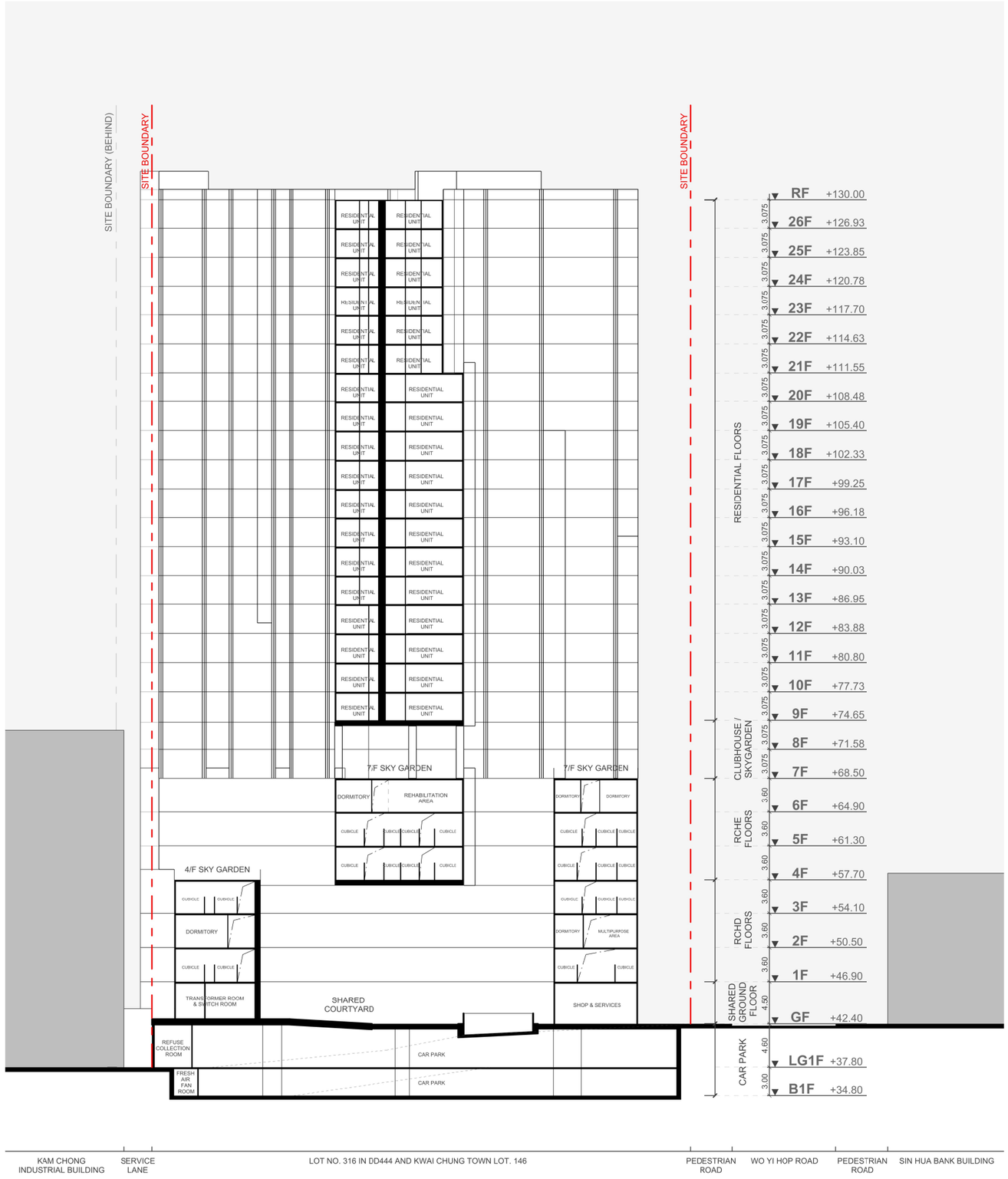

SECTION X-X'

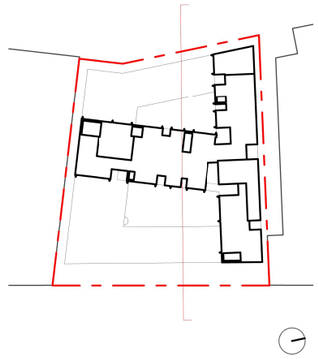

0 5 10m

1:500@A3

index
architecture
limited

Flat 12, 6/F,
Decca Industrial Centre,
12 Kut Shing Street, Chai Wan,
Hong Kong SAR
Tel: (852) 2155 1007
Fax: (852) 2155 1008
Email: info@indexarchitecture.com

FOR INFORMATION

Issue	Description	Date
-	ISSUE	03-04-2024

ALL DIMENSION TO BE VERIFIED BY CONTRACTOR

Project no: 22013

Project: Park Sun Building Redevelopment

Client: Kin Ying Co. Ltd.

Address: Wo Yi Hop Road, Kwai Chung Hong Kong

Drawn OC Scale: 1:500@A3

Title: Section X-X'

Sheet: Rev:-

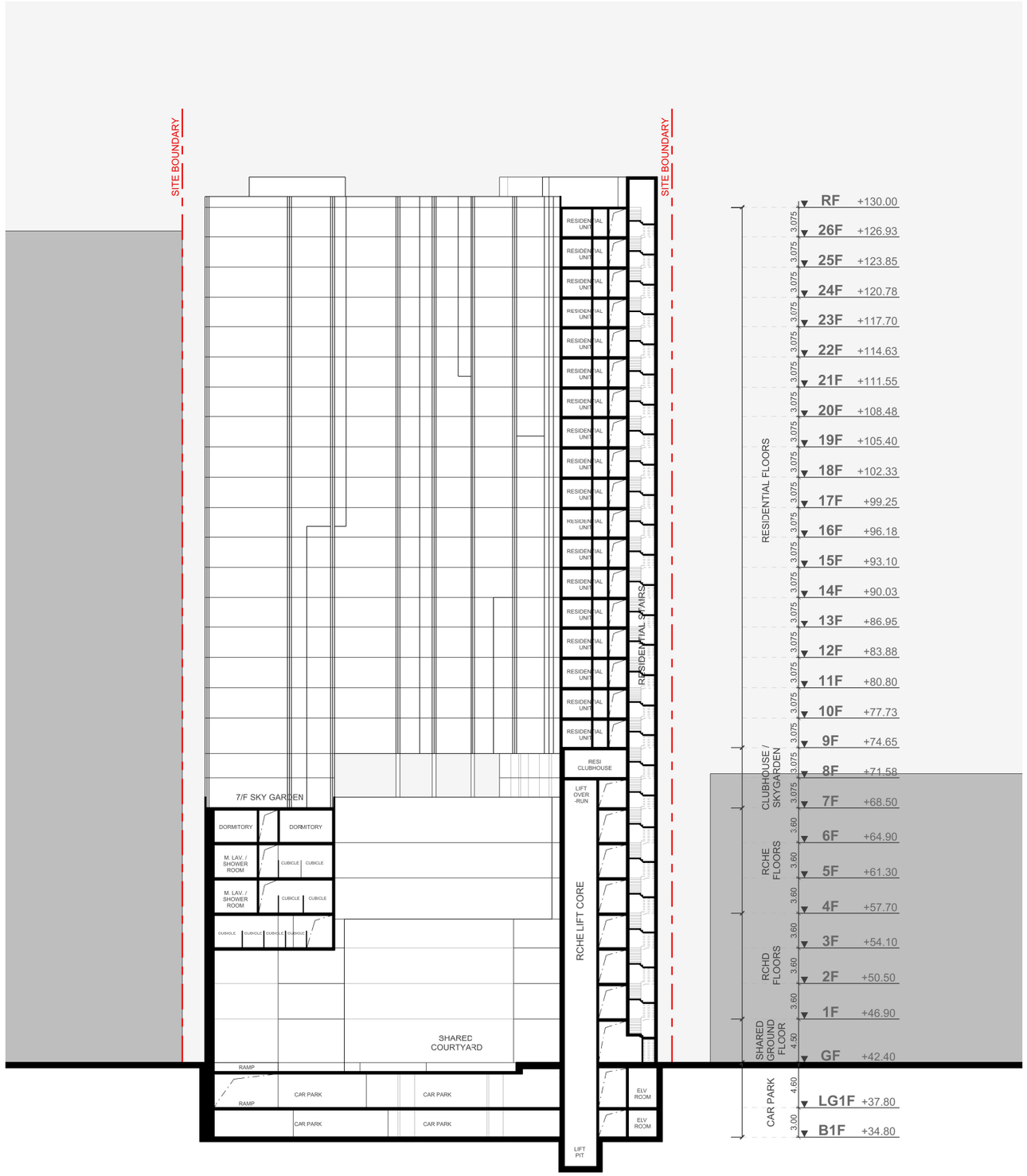

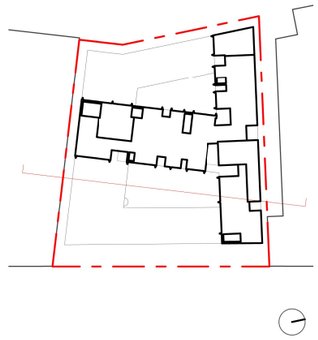

0 5 10m

1:500@A3

SECTION Y-Y'

index
architecture
limited

Flat 12, 6/F,
Decca Industrial Centre,
12 Kut Shing Street, Chai Wan,
Hong Kong SAR
Tel: (852) 2155 1007
Fax: (852) 2155 1008
Email: info@indexarchitecture.com

FOR INFORMATION

Issue	Description	Date
-	ISSUE	03-04-2024

ALL DIMENSION TO BE VERIFIED BY CONTRACTOR

Project no: 22013

Project: Park Sun Building Redevelopment

Client: Kin Ying Co. Ltd.

Address: Wo Yi Hop Road, Kwai Chung Hong Kong

Drawn: OC Scale: 1:500@A3

Title: Section Y-Y'

Sheet: Rev:-

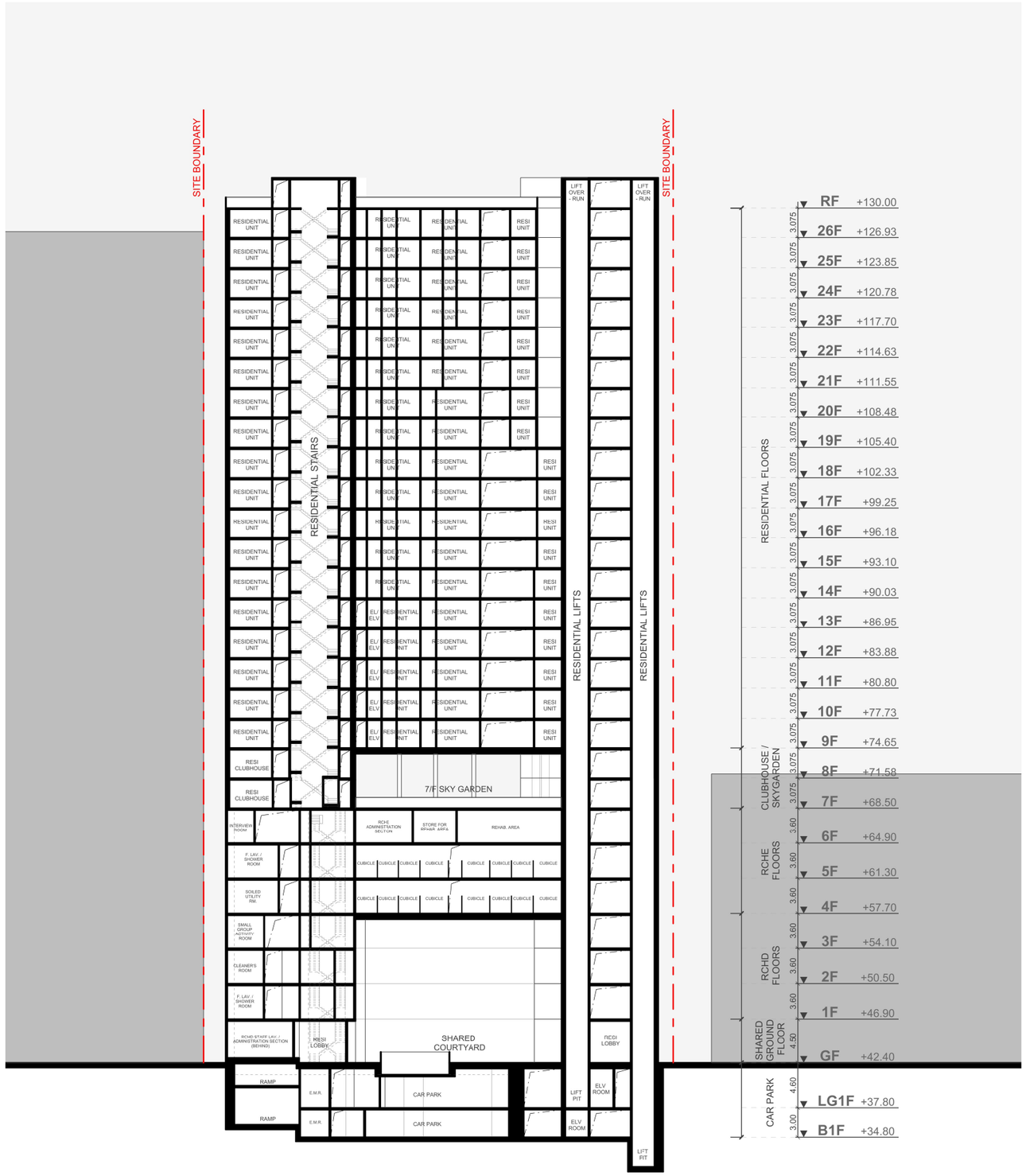

SECTION Z-Z'

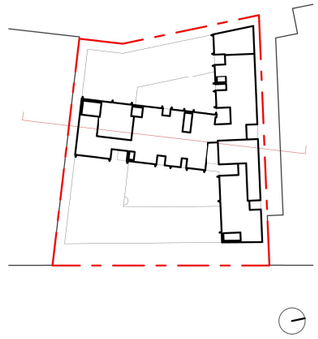

0 5 10m

1:500@A3

index
architecture
limited

Flat 12, 6/F,
Decca Industrial Centre,
12 Kut Shing Street, Chai Wan,
Hong Kong SAR
Tel: (852) 2155 1007
Fax: (852) 2155 1008
Email: info@indexarchitecture.com

FOR INFORMATION

Issue	Description	Date
-	ISSUE	03-04-2024

ALL DIMENSION TO BE VERIFIED BY CONTRACTOR

Project no: 22013

Project: Park Sun Building Redevelopment

Client: Kin Ying Co. Ltd.

Address: Wo Yi Hop Road, Kwai Chung Hong Kong

Drawn OC Scale: 1:500@A3

Title: Section Z-Z'

Sheet: Rev:-

APPENDIX 2.1
YEAR 2045 PEAK HOUR TRAFFIC FORECAST

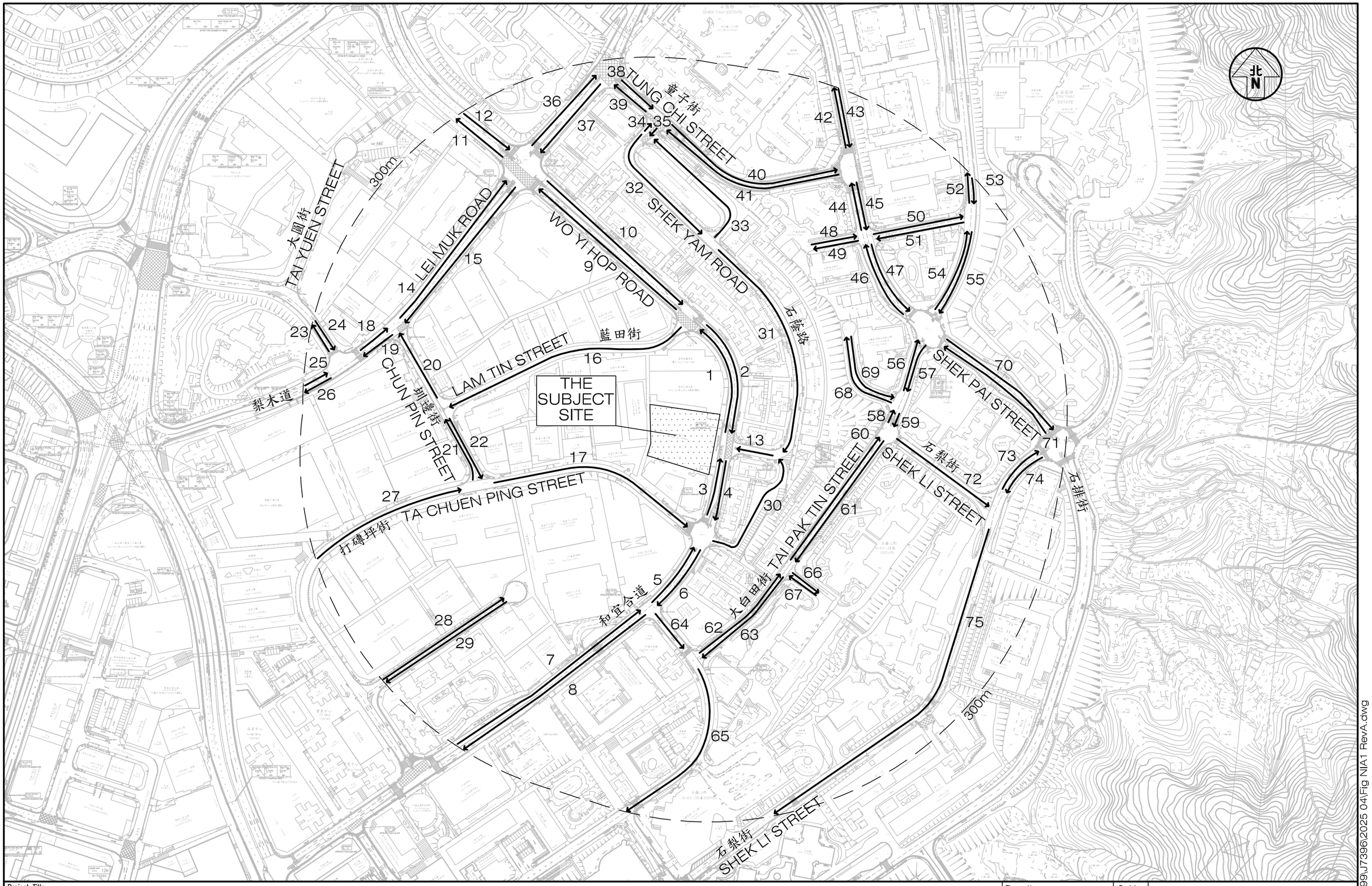

Project Title: PROPOSED DEVELOPMENT AT 97 – 107 WO YI HOP ROAD, KWAI CHUNG	J7396	Figure No. NIA1	Revision A	CKM Asia Limited Traffic and Transportation Planning Consultants 21st Floor, Methodist House, 36 Hennessy Road Wan Chai, Hong Kong Tel : (852) 2520 5990 Fax : (852) 2528 6343 Email : mail@ckmasia.com.hk
Figure Title: LOCATION OF TRAFFIC DATA WITHIN 300M STUDY AREA FROM SUBJECT SITE		Designed by: T T O Drawn by: N C M Checked by: K C		
		Scale in A3: 1 : 3000 Date: 16 APR 2025		

T:\JOB\J7350-J7399\J7396\2025 04\Fig NIA1 RevA.dwg

YEAR 2045 TRAFFIC FORECAST

Date:7 May 2025 Job No.: J7396

Link ID	Road Section	From Road	To Road	AM Peak Hour		
				Traffic Flows (veh/hr)	Vehicle Composition	
					LV	HV
L001	Wo Yi Hop Road (NB)	Shek Yi Road	Lam Tin Street	580	66%	34%
L002	Wo Yi Hop Road (SB)	Lam Tin Street	Shek Yi Road	420	75%	25%
L003	Wo Yi Hop Road (NB)	Ta Chuen Ping Street	Shek Yi Road	440	66%	34%
L004	Wo Yi Hop Road (SB)	Shek Yi Road	Ta Chuen Ping Street	530	68%	32%
L005	Wo Yi Hop Road (NB)	Tai Loong Street	Ta Chuen Ping Street	320	70%	30%
L006	Wo Yi Hop Road (SB)	Ta Chuen Ping Street	Tai Loong Street	540	64%	36%
L007	Wo Yi Hop Road (NB)	Ta Chuen Ping Street	Tai Loong Street	510	69%	31%
L008	Wo Yi Hop Road (SB)	Tai Loong Street	Ta Chuen Ping Street	260	71%	29%
L009	Wo Yi Hop Road (NB)	Lam Tin Street	Lei Muk Road	550	63%	37%
L010	Wo Yi Hop Road (SB)	Lei Muk Road	Lam Tin Street	560	72%	28%
L011	Wo Yi Hop Road (NB)	Lei Muk Road	Cheung Wing Road	1,260	65%	35%
L012	Wo Yi Hop Road (SB)	Cheung Wing Road	Lei Muk Road	1,340	68%	32%
L013	Shek Yi Road (WB)	Shek Yam Road	Wo Yi Hop Road	280	60%	40%
L014	Lei Muk Road (EB)	Chun Pin Street	Wo Yi Hop Road	440	64%	36%
L015	Lei Muk Road (WB)	Wo Yi Hop Road	Chun Pin Street	360	58%	42%
L016	Lam Tin Street (WB)	Wo Yi Hop Road	Chun Pin Street	180	64%	36%
L017	Ta Chuen Ping Street (EB)	Chun Pin Street	Wo Yi Hop Road	190	42%	58%
L018	Lei Muk Road (EB)	Kwok Shui Road	Chun Pin Street	320	63%	37%
L019	Lei Muk Road (WB)	Chun Pin Street	Kwok Shui Road	640	54%	46%
L020	Chun Pin Street (NB)	Lam Tin Street	Lei Muk Road	410	54%	46%
L021	Chun Pin Street (NB)	Ta Chuen Ping Street	Lam Tin Street	320	54%	46%
L022	Chun Pin Street (SB)	Lam Tin Street	Ta Chuen Ping Street	90	69%	31%
L023	Kwok Shui Road (NB)	Lei Muk Road	Tai Yuen Street	740	56%	44%
L024	Kwok Shui Road (SB)	Tai Yuen Street	Lei Muk Road	100	56%	44%
L025	Lei Muk Road (EB)	Cheung Wing Road	Kwok Shui Road	440	68%	32%
L026	Lei Muk Road (WB)	Kwok Shui Road	Cheung Wing Road	120	70%	30%
L027	Ta Chuen Ping Street (EB)	Shek Kin Street	Chun Pin Street	440	47%	53%
L028	Shek Kin Street (EB)	Ta Chuen Ping Street	Cul-de-sac	120	56%	44%
L029	Shek Kin Street (WB)	Cul-de-sac	Ta Chuen Ping Street	110	51%	49%
L030	Shek Yam Road (NB)	Wo Yi Hop Road	Shek Yi Road	80	56%	44%
L031	Shek Yam Road (SB)	Shek Yam Road	Shek Yi Road	200	48%	52%
L032	Shek Yam Road (SB)	Shek Yam Road	Shek Yam Road	260	35%	65%
L033	Shek Yam Road (NB)	Shek Yam Road	Shek Yam Road	70	0%	100%
L034	Shek Yam Road (NB)	Shek Yam Road	Tung Chi Street	70	0%	100%
L035	Shek Yam Road (SB)	Tung Chi Street	Shek Yam Road	260	35%	65%
L036	Lei Muk Road (EB)	Wo Yi Hop Road	Tung Chi Street	670	63%	37%
L037	Lei Muk Road (WB)	Tung Chi Street	Wo Yi Hop Road	520	60%	40%
L038	Tung Chi Street (EB)	Lei Muk Road	Shek Yam Road	420	53%	47%
L039	Tung Chi Street (WB)	Shek Yam Road	Lei Muk Road	300	54%	46%
L040	Tung Chi Street (EB)	Shek Yam Road	Tai Pak Tin Street	250	61%	39%
L041	Tung Chi Street (WB)	Tai Pak Tin Street	Shek Yam Road	340	56%	44%
L042	Tai Pak Tin Street (NB)	Tung Chi Street	Lei Muk Road	310	48%	52%
L043	Tai Pak Tin Street (SB)	Lei Muk Road	Tung Chi Street	390	57%	43%
L044	Tai Pak Tin Street (NB)	On Chit Street	Tung Chi Street	440	61%	39%
L045	Tai Pak Tin Street (SB)	Tung Chi Street	On Chit Street	430	71%	29%
L046	Tai Pak Tin Street (NB)	On Chit Lane	On Chit Street	360	55%	45%
L047	Tai Pak Tin Street (SB)	On Chit Street	On Chit Lane	280	62%	38%
L048	On Chit Street (EB)	Cul-de-sac	Tai Pak Tin Street	10	40%	60%
L049	On Chit Street (WB)	Tai Pak Tin Street	Cul-de-sac	10	67%	33%
L050	On Chit Street (EB)	Tai Pak Tin Street	On Chit Lane	200	79%	21%
L051	On Chit Street (WB)	On Chit Lane	Tai Pak Tin Street	120	78%	22%
L052	On Chit Street (NB)	On Chit Lane	Access Road of On Chit Street	210	79%	21%
L053	On Chit Street (WB)	Access Road of On Chit Street	On Chit Lane	220	79%	21%
L054	On Chit Lane (NB)	Shek Pai Street	On Chit Street	50	60%	40%
L055	On Chit Lane (SB)	On Chit Street	Shek Pai Street	140	73%	27%
L056	Tai Pak Tin Street (NB)	Tai Pak Tin Lane	Shek Pai Street	90	57%	43%
L057	Tai Pak Tin Street (SB)	Shek Pai Street	Tai Pak Tin Lane	150	57%	43%
L058	Tai Pak Tin Street (NB)	Shek Li Street	Tai Pak Tin Lane	90	57%	43%
L059	Tai Pak Tin Street (SB)	Tai Pak Tin Lane	Shek Li Street	150	57%	43%
L060	Tai Pak Tin Street (NB)	Access Road of Shek Lei (ii) Estate	Shek Li Street	170	49%	51%
L061	Tai Pak Tin Street (SB)	Shek Li Street	Access Road of Shek Lei (ii) Estate	50	92%	8%
L062	Tai Pak Tin Street (NB)	Tai Loong Street	Access Road of Shek Lei (ii) Estate	170	49%	51%
L063	Tai Pak Tin Street (SB)	Access Road of Shek Lei (ii) Estate	Tai Loong Street	60	91%	9%
L064	Tai Loong Street (SB)	Wo Yi Hop Road	Tai Pak Tin Street	480	62%	38%
L065	Tai Loong Street (SB)	Tai Pak Tin Street	Wai Kek Street	370	72%	28%
L066	Access Road of Shek Lei (ii) Estate	Tai Pak Tin Street	Cul-de-sac	20	81%	19%
L067	Access Road of Shek Lei (ii) Estate	Cul-de-sac	Tai Pak Tin Street	30	77%	23%
L068	Tai Pak Tin Lane (NB)	Tai Pak Tin Street	Cul-de-sac	10	100%	0%
L069	Tai Pak Tin Lane (SB)	Cul-de-sac	Tai Pak Tin Street	10	88%	13%
L070	Shek Pai Street (EB)	Tai Pak Tin Street	On Chuk Street	290	68%	32%
L071	Shek Pai Street (WB)	On Chuk Street	Tai Pak Tin Street	350	53%	47%
L072	Shek Li Street (EB)	Tai Pak Tin Street	On Chuk Street	180	40%	60%
L073	On Chuk Street (NB)	Shek Li Street	Shek Pai Street	70	54%	46%
L074	On Chuk Street (SB)	Shek Pai Street	Shek Li Street	50	77%	23%
L075	Shek Li Street (SB)	On Chuk Street	Wai Kek Street	160	45%	55%

Note: "LV" includes motorcycle, private car and taxi
"HV" includes light / medium / heavy goods vehicle, public / private light bus, non-franchised bus and franchised bus

YEAR 2045 TRAFFIC FORECAST

Date:7 May 2025 Job No.: J7396

Link ID	Road Section	From Road	To Road	PM Peak Hour		
				Traffic Flows (veh/hr)	Vehicle Composition	
					LV	HV
L001	Wo Yi Hop Road (NB)	Shek Yi Road	Lam Tin Street	660	70%	30%
L002	Wo Yi Hop Road (SB)	Lam Tin Street	Shek Yi Road	400	85%	15%
L003	Wo Yi Hop Road (NB)	Ta Chuen Ping Street	Shek Yi Road	470	61%	39%
L004	Wo Yi Hop Road (SB)	Shek Yi Road	Ta Chuen Ping Street	520	71%	29%
L005	Wo Yi Hop Road (NB)	Tai Loong Street	Ta Chuen Ping Street	310	61%	39%
L006	Wo Yi Hop Road (SB)	Ta Chuen Ping Street	Tai Loong Street	540	68%	32%
L007	Wo Yi Hop Road (NB)	Ta Chuen Ping Street	Tai Loong Street	540	56%	44%
L008	Wo Yi Hop Road (SB)	Tai Loong Street	Ta Chuen Ping Street	280	73%	27%
L009	Wo Yi Hop Road (NB)	Lam Tin Street	Lei Muk Road	570	70%	30%
L010	Wo Yi Hop Road (SB)	Lei Muk Road	Lam Tin Street	530	82%	18%
L011	Wo Yi Hop Road (NB)	Lei Muk Road	Cheung Wing Road	1,270	68%	32%
L012	Wo Yi Hop Road (SB)	Cheung Wing Road	Lei Muk Road	1,390	76%	24%
L013	Shek Yi Road (WB)	Shek Yam Road	Wo Yi Hop Road	330	66%	34%
L014	Lei Muk Road (EB)	Chun Pin Street	Wo Yi Hop Road	470	59%	41%
L015	Lei Muk Road (WB)	Wo Yi Hop Road	Chun Pin Street	370	69%	31%
L016	Lam Tin Street (WB)	Wo Yi Hop Road	Chun Pin Street	220	60%	40%
L017	Ta Chuen Ping Street (EB)	Chun Pin Street	Wo Yi Hop Road	250	61%	39%
L018	Lei Muk Road (EB)	Kwok Shui Road	Chun Pin Street	270	61%	39%
L019	Lei Muk Road (WB)	Chun Pin Street	Kwok Shui Road	610	67%	33%
L020	Chun Pin Street (NB)	Lam Tin Street	Lei Muk Road	440	60%	40%
L021	Chun Pin Street (NB)	Ta Chuen Ping Street	Lam Tin Street	340	63%	37%
L022	Chun Pin Street (SB)	Lam Tin Street	Ta Chuen Ping Street	120	66%	34%
L023	Kwok Shui Road (NB)	Lei Muk Road	Tai Yuen Street	740	65%	35%
L024	Kwok Shui Road (SB)	Tai Yuen Street	Lei Muk Road	80	65%	35%
L025	Lei Muk Road (EB)	Cheung Wing Road	Kwok Shui Road	450	65%	35%
L026	Lei Muk Road (WB)	Kwok Shui Road	Cheung Wing Road	140	76%	24%
L027	Ta Chuen Ping Street (EB)	Shek Kin Street	Chun Pin Street	460	61%	39%
L028	Shek Kin Street (EB)	Ta Chuen Ping Street	Cul-de-sac	120	57%	43%
L029	Shek Kin Street (WB)	Cul-de-sac	Ta Chuen Ping Street	110	52%	48%
L030	Shek Yam Road (NB)	Wo Yi Hop Road	Shek Yi Road	80	60%	40%
L031	Shek Yam Road (SB)	Shek Yam Road	Shek Yi Road	250	58%	42%
L032	Shek Yam Road (SB)	Shek Yam Road	Shek Yam Road	300	46%	54%
L033	Shek Yam Road (NB)	Shek Yam Road	Shek Yam Road	60	0%	100%
L034	Shek Yam Road (NB)	Shek Yam Road	Tung Chi Street	60	0%	100%
L035	Shek Yam Road (SB)	Tung Chi Street	Shek Yam Road	300	46%	54%
L036	Lei Muk Road (EB)	Wo Yi Hop Road	Tung Chi Street	740	69%	31%
L037	Lei Muk Road (WB)	Tung Chi Street	Wo Yi Hop Road	480	70%	30%
L038	Tung Chi Street (EB)	Lei Muk Road	Shek Yam Road	410	59%	41%
L039	Tung Chi Street (WB)	Shek Yam Road	Lei Muk Road	240	55%	45%
L040	Tung Chi Street (EB)	Shek Yam Road	Tai Pak Tin Street	220	71%	29%
L041	Tung Chi Street (WB)	Tai Pak Tin Street	Shek Yam Road	300	63%	37%
L042	Tai Pak Tin Street (NB)	Tung Chi Street	Lei Muk Road	250	50%	50%
L043	Tai Pak Tin Street (SB)	Lei Muk Road	Tung Chi Street	290	54%	46%
L044	Tai Pak Tin Street (NB)	On Chit Street	Tung Chi Street	440	57%	43%
L045	Tai Pak Tin Street (SB)	Tung Chi Street	On Chit Street	400	62%	38%
L046	Tai Pak Tin Street (NB)	On Chit Lane	On Chit Street	400	55%	45%
L047	Tai Pak Tin Street (SB)	On Chit Street	On Chit Lane	350	62%	38%
L048	On Chit Street (EB)	Cul-de-sac	Tai Pak Tin Street	10	71%	29%
L049	On Chit Street (WB)	Tai Pak Tin Street	Cul-de-sac	10	25%	75%
L050	On Chit Street (EB)	Tai Pak Tin Street	On Chit Lane	80	68%	32%
L051	On Chit Street (WB)	On Chit Lane	Tai Pak Tin Street	70	71%	29%
L052	On Chit Street (NB)	On Chit Lane	Access Road of On Chit Street	80	58%	43%
L053	On Chit Street (WB)	Access Road of On Chit Street	On Chit Lane	100	64%	36%
L054	On Chit Lane (NB)	Shek Pai Street	On Chit Street	30	46%	54%
L055	On Chit Lane (SB)	On Chit Street	Shek Pai Street	60	58%	42%
L056	Tai Pak Tin Street (NB)	Tai Pak Tin Lane	Shek Pai Street	80	62%	38%
L057	Tai Pak Tin Street (SB)	Shek Pai Street	Tai Pak Tin Lane	90	48%	52%
L058	Tai Pak Tin Street (NB)	Shek Li Street	Tai Pak Tin Lane	70	58%	42%
L059	Tai Pak Tin Street (SB)	Tai Pak Tin Lane	Shek Li Street	90	49%	51%
L060	Tai Pak Tin Street (NB)	Access Road of Shek Lei (ii) Estate	Shek Li Street	160	49%	51%
L061	Tai Pak Tin Street (SB)	Shek Li Street	Access Road of Shek Lei (ii) Estate	40	72%	28%
L062	Tai Pak Tin Street (NB)	Tai Loong Street	Access Road of Shek Lei (ii) Estate	170	50%	50%
L063	Tai Pak Tin Street (SB)	Access Road of Shek Lei (ii) Estate	Tai Loong Street	50	73%	27%
L064	Tai Loong Street (SB)	Wo Yi Hop Road	Tai Pak Tin Street	510	60%	40%
L065	Tai Loong Street (SB)	Tai Pak Tin Street	Wai Kek Street	390	66%	34%
L066	Access Road of Shek Lei (ii) Estate	Tai Pak Tin Street	Cul-de-sac	30	72%	28%
L067	Access Road of Shek Lei (ii) Estate	Cul-de-sac	Tai Pak Tin Street	40	69%	31%
L068	Tai Pak Tin Lane (NB)	Tai Pak Tin Street	Cul-de-sac	10	60%	40%
L069	Tai Pak Tin Lane (SB)	Cul-de-sac	Tai Pak Tin Street	10	100%	0%
L070	Shek Pai Street (EB)	Tai Pak Tin Street	On Chuk Street	340	64%	36%
L071	Shek Pai Street (WB)	On Chuk Street	Tai Pak Tin Street	380	53%	47%
L072	Shek Li Street (EB)	Tai Pak Tin Street	On Chuk Street	150	38%	62%
L073	On Chuk Street (NB)	Shek Li Street	Shek Pai Street	70	48%	52%
L074	On Chuk Street (SB)	Shek Pai Street	Shek Li Street	100	59%	41%
L075	Shek Li Street (SB)	On Chuk Street	Wai Kek Street	170	47%	53%

Note: "LV" includes motorcycle, private car and taxi
"HV" includes light / medium / heavy goods vehicle, public / private light bus, non-franchised bus and franchised bus

APPENDIX 2.2
DETAILED RESULTS OF ROAD TRAFFIC NOISE ASSESSMENT
(BASE CASE SCENARIO)

Predicted Road Traffic Noise Levels for 2045 (Base Case Scenario)

Floor	NAP ID	Description	Floor Height, mPD	Assessment Height, mPD	Noise Criteria, dB(A)	Unmitigated Noise Level, $L_{10\ (1\ hour)}$, dB(A)		Compliance
						AM	PM	
G/F	GF_N01	RCHD Interview Room	+42.40	+43.6	70	58	58	Yes
	GF_N02	RCHD Administration Section			70	57	57	Yes
	GF_N03	RCHD Administration Section			70	58	58	Yes
	GF_N04	RCHD Administration Section			70	58	59	Yes
	GF_N05	RCHD Conference Room			70	59	59	Yes
1/F	1F_N01	RCHD Dormitory	+46.90	+48.1	70	50	50	Yes
	1F_N02	RCHD Dormitory			70	52	52	Yes
	1F_N03	RCHD Dormitory			70	54	54	Yes
	1F_N04	RCHD Dormitory			70	55	55	Yes
	1F_N05	RCHD Dormitory			70	56	56	Yes
	1F_N06	Nurse Station			70	56	56	Yes
	1F_N07	RCHD Dormitory			70	58	58	Yes
	1F_N08	RCHD Dormitory			70	58	58	Yes
	1F_N09	RCHD Dormitory			70	56	56	Yes
	1F_N10	Sick Bay with Negative Pressure			70	56	57	Yes
	1F_N11	RCHD Dormitory			70	50	50	Yes
	1F_N12	RCHD Dormitory			70	50	50	Yes
	1F_N13	RCHD Dormitory			70	50	50	Yes
	1F_N14	RCHD Dormitory			70	50	50	Yes
	1F_N15	RCHD Dormitory			70	**78**	**77**	**No**
	1F_N16	RCHD Dormitory			70	**77**	**77**	**No**
	1F_N17	RCHD Rehabilitation Area			70	**77**	**77**	**No**
	1F_N18	RCHD Rehabilitation Area			70	**77**	**77**	**No**
	1F_N19	RCHD Dining Room/ Multiprupose Room			70	56	56	Yes
2/F	2F_N01	RCHD Dormitory	+50.50	+51.7	70	51	51	Yes
	2F_N02	RCHD Dormitory			70	52	52	Yes
	2F_N03	RCHD Dormitory			70	55	55	Yes
	2F_N04	RCHD Dormitory			70	55	55	Yes
	2F_N05	RCHD Dormitory			70	56	56	Yes
	2F_N06	RCHD Dormitory			70	57	57	Yes
	2F_N07	RCHD Dormitory			70	58	58	Yes
	2F_N08	RCHD Dormitory			70	59	59	Yes
	2F_N09	RCHD Dormitory			70	57	57	Yes
	2F_N10	Sick Bay with Negative Pressure			70	57	57	Yes
	2F_N11	RCHD Rehabilitation Area			70	54	54	Yes
	2F_N12	RCHD Rehabilitation Area			70	54	54	Yes
	2F_N13	RCHD Rehabilitation Area			70	54	54	Yes
	2F_N14	RCHD Rehabilitation Area			70	**71**	**71**	**No**
	2F_N15	RCHD Dining Room/ Multiprupose Room			70	**77**	**77**	**No**
	2F_N16	RCHD Dining Room/ Multiprupose Room			70	**77**	**77**	**No**
	2F_N17	RCHD Rehabilitation Area			70	**77**	**76**	**No**
	2F_N18	Nurse Station			70	57	57	Yes
3/F	3F_N01	RCHD Dormitory	+54.10	+55.3	70	50	50	Yes
	3F_N02	RCHD Dormitory			70	52	52	Yes
	3F_N03	RCHD Dormitory			70	54	54	Yes
	3F_N04	RCHD Dormitory			70	55	55	Yes
	3F_N05	Sick Bay with Negative Pressure			70	56	56	Yes
	3F_N06	Nurse Station			70	56	56	Yes
	3F_N07	RCHD Dormitory			70	57	57	Yes
	3F_N08	RCHD Dormitory			70	58	58	Yes
	3F_N09	RCHD Dormitory			70	56	56	Yes
	3F_N10	RCHD Dormitory			70	56	56	Yes
	3F_N11	RCHD Dormitory			70	57	57	Yes
	3F_N12	RCHD Small Group Activity Room			70	58	58	Yes
	3F_N13	RCHD Small Group Activity Room			70	59	59	Yes
	3F_N14	RCHD Dormitory			70	64	64	Yes
	3F_N15	RCHD Dormitory			70	65	66	Yes
	3F_N16	RCHD Dormitory			70	67	68	Yes
	3F_N17	RCHD Dormitory			70	70	70	Yes
	3F_N18	RCHD Dormitory			70	**76**	**77**	**No**
	3F_N19	RCHD Dormitory			70	**77**	**77**	**No**
	3F_N20	RCHD Dormitory			70	**76**	**76**	**No**
	3F_N21	RCHD Dormitory			70	**77**	**76**	**No**
	3F_N22	RCHD Dormitory			70	**76**	**76**	**No**
	3F_N23	RCHD Dining Room/ Multiprupose Room			70	**76**	**76**	**No**
	3F_N24	RCHD Dining Room/ Multiprupose Room			70	57	56	Yes
4/F	4F_N01	RCHE Dormitory	+57.70	+58.9	70	45	45	Yes
	4F_N02	RCHE Dormitory			70	45	45	Yes
	4F_N03	RCHE Dormitory			70	45	45	Yes
	4F_N04	RCHE Dormitory			70	45	45	Yes
	4F_N05	RCHE Dormitory			70	45	45	Yes
	4F_N06	RCHD Small Group Activity Room			70	45	45	Yes
	4F_N07	RCHD Small Group Activity Room			70	57	58	Yes
	4F_N08	RCHE Dormitory			70	64	64	Yes
	4F_N09	RCHE Dormitory			70	65	65	Yes
	4F_N10	RCHE Dormitory			70	67	67	Yes
	4F_N11	RCHE Dormitory			70	69	70	Yes
	4F_N12	RCHE Dormitory			70	**76**	**76**	**No**
	4F_N13	RCHE Dormitory			70	**76**	**76**	**No**
	4F_N14	RCHE Dormitory			70	**76**	**76**	**No**
	4F_N15	RCHE Dormitory			70	**76**	**76**	**No**
	4F_N16	RCHE Dormitory			70	**76**	**76**	**No**
	4F_N17	RCHE Dormitory			70	**76**	**76**	**No**
	4F_N18	RCHE Dormitory			70	**76**	**76**	**No**
	4F_N19	RCHE Dormitory			70	**76**	**76**	**No**

Predicted Road Traffic Noise Levels for 2045 (Base Case Scenario)

Floor	NAP ID	Description	Floor Height, mPD	Assessment Height, mPD	Noise Criteria, dB(A)	Unmitigated Noise Level, $L_{10\ (1\ hour)}$, dB(A)		Compliance
						AM	PM	
	4F_N20	RCHD Dining Room/ Multiprupose Room			70	**76**	**75**	**No**
	4F_N21	Nurse Station			70	56	56	Yes
5/F	5F_N01	Sick Bay with Negative Pressure	+61.30	+62.5	70	50	50	Yes
	5F_N02	RCHE Dormitory			70	46	45	Yes
	5F_N03	RCHE Dormitory			70	46	46	Yes
	5F_N04	RCHE Dormitory			70	46	46	Yes
	5F_N05	RCHE Dormitory			70	46	46	Yes
	5F_N06	RCHE Dormitory			70	46	46	Yes
	5F_N07	RCHE Dormitory			70	63	64	Yes
	5F_N08	RCHE Dormitory			70	65	65	Yes
	5F_N09	RCHE Dormitory			70	66	67	Yes
	5F_N10	RCHE Dormitory			70	69	69	Yes
	5F_N11	RCHE Dormitory			70	**75**	**75**	**No**
	5F_N12	RCHE Dormitory			70	**76**	**76**	**No**
	5F_N13	RCHE Dormitory			70	**76**	**76**	**No**
	5F_N14	RCHE Dormitory			70	**76**	**76**	**No**
	5F_N15	RCHE Dormitory			70	**75**	**75**	**No**
	5F_N16	RCHE Dormitory			70	**75**	**75**	**No**
	5F_N17	RCHE Dormitory			70	**75**	**75**	**No**
	5F_N18	RCHE Dormitory			70	**75**	**75**	**No**
	5F_N19	RCHD Dining Room/ Multiprupose Room			70	**75**	**75**	**No**
	5F_N20	Nurse Station			70	56	56	Yes
	5F_N21	RCHE Dormitory			70	54	54	Yes
6/F	6F_N01	RCHE Dormitory	+64.90	+66.1	70	53	53	Yes
	6F_N02	RCHE Dormitory			70	50	50	Yes
	6F_N03	RCHE Dormitory			70	47	47	Yes
	6F_N04	RCHE Dormitory			70	47	47	Yes
	6F_N05	RCHE Dormitory			70	47	47	Yes
	6F_N06	RCHE Dormitory			70	47	47	Yes
	6F_N07	RCHE Dormitory			70	47	47	Yes
	6F_N08	RCHE Interview Room			70	58	58	Yes
	6F_N09	RCHE Dormitory			70	63	64	Yes
	6F_N10	RCHE Dormitory			70	64	65	Yes
	6F_N11	RCHE Dormitory			70	66	66	Yes
	6F_N12	RCHE Dormitory			70	**75**	**75**	**No**
	6F_N13	RCHE Dormitory			70	**75**	**75**	**No**
	6F_N14	RCHE Dormitory			70	**75**	**75**	**No**
	6F_N15	RCHE Dormitory			70	**75**	**75**	**No**
	6F_N16	RCHE Dormitory			70	**75**	**75**	**No**
	6F_N17	RCHE Dormitory			70	**75**	**75**	**No**
	6F_N18	RCHE Dormitory			70	**74**	**74**	**No**
	6F_N19	RCHD Dining Room/ Multiprupose Room			70	57	56	Yes
	6F_N20	Nurse Station			70	56	56	Yes
7/F	7F_N01	Residential Clubhouse	+68.50	+69.7	70	45	45	Yes
	7F_N02	Residential Clubhouse			70	53	53	Yes
	7F_N03	Residential Clubhouse			70	52	52	Yes
	7F_N04	Residential Clubhouse			70	51	51	Yes
	7F_N05	Residential Clubhouse			70	46	46	Yes
	7F_N06	Residential Clubhouse			70	57	58	Yes
	7F_N07	Residential Clubhouse			70	59	59	Yes
	7F_N08	Residential Clubhouse			70	**74**	**74**	**No**
	7F_N09	Residential Clubhouse			70	**74**	**73**	**No**
	7F_N10	Residential Clubhouse			70	64	64	Yes
	7F_N11	Residential Clubhouse			70	56	56	Yes
8/F	8F_N01	Residential Clubhouse	+71.58	+72.8	70	47	47	Yes
	8F_N02	Residential Clubhouse			70	54	53	Yes
	8F_N03	Residential Clubhouse			70	53	53	Yes
	8F_N04	Residential Clubhouse			70	52	52	Yes
	8F_N05	Residential Clubhouse			70	51	51	Yes
	8F_N06	Residential Clubhouse			70	55	55	Yes
	8F_N07	Residential Clubhouse			70	61	61	Yes
	8F_N08	Residential Clubhouse			70	**72**	**72**	**No**
	8F_N09	Residential Clubhouse			70	**74**	**74**	**No**
	8F_N10	Residential Clubhouse			70	**73**	**73**	**No**
	8F_N11	Residential Clubhouse			70	64	63	Yes
	8F_N12	Residential Clubhouse			70	56	56	Yes
	8F_N13	Residential Clubhouse			70	56	55	Yes
	8F_N14	Residential Clubhouse			70	55	54	Yes
	8F_N15	Residential Clubhouse			70	48	48	Yes
	8F_N16	Residential Clubhouse			70	57	58	Yes
	8F_N17	Residential Clubhouse			70	59	59	Yes
	8F_N18	Residential Clubhouse			70	57	57	Yes
	8F_N19	Residential Clubhouse			70	57	57	Yes

Predicted Road Traffic Noise Levels for 2045 (Base Case Scenario)

Floor	NAP ID	Description	Floor Height, mPD	Assessment Height, mPD	Noise Criteria, dB(A)	Unmitigated Noise Level, $L_{10\ (1\ hour)}$, dB(A)		Compliance
						AM	PM	
9/F	9F_N01	Flat - Bedroom	+74.65	+75.9	70	52	52	Yes
	9F_N02	Flat - Bedroom			70	52	52	Yes
	9F_N03	Flat - Living Room			70	52	51	Yes
	9F_N04	Flat - Bedroom			70	52	51	Yes
	9F_N05	Flat - Bedroom			70	51	51	Yes
	9F_N06	Flat - Bedroom			70	50	50	Yes
	9F_N07	Flat - Living Room			70	49	49	Yes
	9F_N08	Flat - Bedroom			70	49	49	Yes
	9F_N09	Flat - Living Room			70	49	49	Yes
	9F_N10	Flat - Bedroom			70	49	48	Yes
	9F_N11	Flat - Living Room			70	49	48	Yes
	9F_N12	Flat - Bedroom			70	46	46	Yes
	9F_N13	Flat - Bedroom			70	47	47	Yes
	9F_N14	Flat - Living Room			70	46	45	Yes
	9F_N15	Flat - Living Room			70	45	44	Yes
	9F_N16	Flat - Bedroom			70	45	44	Yes
	9F_N17	Flat - Living Room			70	60	60	Yes
	9F_N18	Flat - Living Room			70	63	63	Yes
	9F_N19	Flat - Living Room			70	70	70	Yes
	9F_N20	Flat - Bedroom			70	70	70	Yes
	9F_N21	Flat - Bedroom			70	70	70	Yes
	9F_N22	Flat - Living Room			70	68	68	Yes
	9F_N23	Flat - Bedroom			70	70	70	Yes
	9F_N24	Flat - Living Room			70	70	70	Yes
	9F_N25	Flat - Bedroom			70	70	70	Yes
	9F_N26	Flat - Bedroom			70	69	69	Yes
	9F_N27	Flat - Bedroom			70	70	70	Yes
	9F_N28	Flat - Living Room			70	70	70	Yes
	9F_N29	Flat - Bedroom			70	70	70	Yes
	9F_N30	Flat - Living Room			70	69	69	Yes
	9F_N31	Flat - Living Room			70	70	70	Yes
	9F_N32	Flat - Bedroom			70	70	70	Yes
	9F_N33	Flat - Living Room			70	**71**	**71**	**No**
	9F_N34	Flat - Bedroom			70	**74**	**73**	**No**
	9F_N35	Flat - Bedroom			70	**74**	**73**	**No**
	9F_N36	Flat - Bedroom			70	**73**	**73**	**No**
	9F_N37	Flat - Living Room			70	**73**	**73**	**No**
	9F_N38	Flat - Living Room			70	65	64	Yes
	9F_N39	Flat - Living Room			70	44	44	Yes
10/F	10F_N01	Flat - Bedroom	+77.73	+78.9	70	52	52	Yes
	10F_N02	Flat - Bedroom			70	52	52	Yes
	10F_N03	Flat - Living Room			70	52	51	Yes
	10F_N04	Flat - Bedroom			70	52	51	Yes
	10F_N05	Flat - Bedroom			70	51	51	Yes
	10F_N06	Flat - Bedroom			70	51	50	Yes
	10F_N07	Flat - Living Room			70	49	49	Yes
	10F_N08	Flat - Bedroom			70	49	49	Yes
	10F_N09	Flat - Living Room			70	49	49	Yes
	10F_N10	Flat - Bedroom			70	49	49	Yes
	10F_N11	Flat - Living Room			70	49	49	Yes
	10F_N12	Flat - Bedroom			70	47	46	Yes
	10F_N13	Flat - Bedroom			70	48	48	Yes
	10F_N14	Flat - Living Room			70	46	46	Yes
	10F_N15	Flat - Living Room			70	45	45	Yes
	10F_N16	Flat - Bedroom			70	45	45	Yes
	10F_N17	Flat - Living Room			70	60	60	Yes
	10F_N18	Flat - Living Room			70	62	63	Yes
	10F_N19	Flat - Living Room			70	69	69	Yes
	10F_N20	Flat - Bedroom			70	70	70	Yes
	10F_N21	Flat - Bedroom			70	70	70	Yes
	10F_N22	Flat - Living Room			70	68	68	Yes
	10F_N23	Flat - Bedroom			70	70	70	Yes
	10F_N24	Flat - Living Room			70	70	70	Yes
	10F_N25	Flat - Bedroom			70	70	70	Yes
	10F_N26	Flat - Bedroom			70	69	69	Yes
	10F_N27	Flat - Bedroom			70	70	70	Yes
	10F_N28	Flat - Living Room			70	70	70	Yes
	10F_N29	Flat - Bedroom			70	70	70	Yes
	10F_N30	Flat - Living Room			70	69	69	Yes
	10F_N31	Flat - Living Room			70	70	70	Yes
	10F_N32	Flat - Bedroom			70	70	70	Yes
	10F_N33	Flat - Living Room			70	**71**	**71**	**No**
	10F_N34	Flat - Bedroom			70	**73**	**73**	**No**
	10F_N35	Flat - Bedroom			70	**73**	**73**	**No**
	10F_N36	Flat - Bedroom			70	**73**	**73**	**No**
	10F_N37	Flat - Living Room			70	**73**	**72**	**No**
	10F_N38	Flat - Living Room			70	64	64	Yes
	10F_N39	Flat - Living Room			70	45	45	Yes

Predicted Road Traffic Noise Levels for 2045 (Base Case Scenario)

Floor	NAP ID	Description	Floor Height, mPD	Assessment Height, mPD	Noise Criteria, dB(A)	Unmitigated Noise Level, $L_{10\ (1\ hour)}$, dB(A)		Compliance
						AM	PM	
11/F	11F_N01	Flat - Bedroom	+80.80	+82.0	70	52	52	Yes
	11F_N02	Flat - Bedroom			70	52	52	Yes
	11F_N03	Flat - Living Room			70	52	52	Yes
	11F_N04	Flat - Bedroom			70	52	52	Yes
	11F_N05	Flat - Bedroom			70	51	51	Yes
	11F_N06	Flat - Bedroom			70	51	51	Yes
	11F_N07	Flat - Living Room			70	50	50	Yes
	11F_N08	Flat - Bedroom			70	49	49	Yes
	11F_N09	Flat - Living Room			70	49	49	Yes
	11F_N10	Flat - Bedroom			70	49	49	Yes
	11F_N11	Flat - Living Room			70	49	49	Yes
	11F_N12	Flat - Bedroom			70	47	47	Yes
	11F_N13	Flat - Bedroom			70	48	48	Yes
	11F_N14	Flat - Living Room			70	47	47	Yes
	11F_N15	Flat - Living Room			70	46	46	Yes
	11F_N16	Flat - Bedroom			70	46	46	Yes
	11F_N17	Flat - Living Room			70	59	60	Yes
	11F_N18	Flat - Living Room			70	62	63	Yes
	11F_N19	Flat - Living Room			70	69	69	Yes
	11F_N20	Flat - Bedroom			70	70	70	Yes
	11F_N21	Flat - Bedroom			70	70	70	Yes
	11F_N22	Flat - Living Room			70	68	68	Yes
	11F_N23	Flat - Bedroom			70	70	70	Yes
	11F_N24	Flat - Living Room			70	70	70	Yes
	11F_N25	Flat - Bedroom			70	70	70	Yes
	11F_N26	Flat - Bedroom			70	69	69	Yes
	11F_N27	Flat - Bedroom			70	70	70	Yes
	11F_N28	Flat - Living Room			70	70	70	Yes
	11F_N29	Flat - Bedroom			70	69	69	Yes
	11F_N30	Flat - Living Room			70	69	69	Yes
	11F_N31	Flat - Living Room			70	69	69	Yes
	11F_N32	Flat - Bedroom			70	70	70	Yes
	11F_N33	Flat - Living Room			70	**71**	**71**	**No**
	11F_N34	Flat - Bedroom			70	**73**	**73**	**No**
	11F_N35	Flat - Bedroom			70	**73**	**73**	**No**
	11F_N36	Flat - Bedroom			70	**73**	**72**	**No**
	11F_N37	Flat - Living Room			70	**72**	**72**	**No**
	11F_N38	Flat - Living Room			70	64	64	Yes
	11F_N39	Flat - Living Room			70	45	45	Yes
12/F	12F_N01	Flat - Bedroom	+83.88	+85.1	70	53	52	Yes
	12F_N02	Flat - Bedroom			70	53	52	Yes
	12F_N03	Flat - Living Room			70	52	52	Yes
	12F_N04	Flat - Bedroom			70	52	52	Yes
	12F_N05	Flat - Bedroom			70	52	52	Yes
	12F_N06	Flat - Bedroom			70	51	51	Yes
	12F_N07	Flat - Living Room			70	51	50	Yes
	12F_N08	Flat - Bedroom			70	50	50	Yes
	12F_N09	Flat - Living Room			70	50	50	Yes
	12F_N10	Flat - Bedroom			70	50	50	Yes
	12F_N11	Flat - Living Room			70	50	50	Yes
	12F_N12	Flat - Bedroom			70	49	49	Yes
	12F_N13	Flat - Bedroom			70	50	49	Yes
	12F_N14	Flat - Living Room			70	48	48	Yes
	12F_N15	Flat - Living Room			70	48	48	Yes
	12F_N16	Flat - Bedroom			70	48	48	Yes
	12F_N17	Flat - Living Room			70	59	60	Yes
	12F_N18	Flat - Living Room			70	62	63	Yes
	12F_N19	Flat - Living Room			70	69	69	Yes
	12F_N20	Flat - Bedroom			70	69	69	Yes
	12F_N21	Flat - Bedroom			70	70	70	Yes
	12F_N22	Flat - Living Room			70	68	68	Yes
	12F_N23	Flat - Bedroom			70	70	70	Yes
	12F_N24	Flat - Living Room			70	70	70	Yes
	12F_N25	Flat - Bedroom			70	70	70	Yes
	12F_N26	Flat - Bedroom			70	69	69	Yes
	12F_N27	Flat - Bedroom			70	70	70	Yes
	12F_N28	Flat - Living Room			70	69	69	Yes
	12F_N29	Flat - Bedroom			70	69	69	Yes
	12F_N30	Flat - Living Room			70	69	69	Yes
	12F_N31	Flat - Living Room			70	69	69	Yes
	12F_N32	Flat - Bedroom			70	69	69	Yes
	12F_N33	Flat - Living Room			70	70	70	Yes
	12F_N34	Flat - Bedroom			70	**73**	**73**	**No**
	12F_N35	Flat - Bedroom			70	**73**	**73**	**No**
	12F_N36	Flat - Bedroom			70	**72**	**72**	**No**
	12F_N37	Flat - Living Room			70	**72**	**72**	**No**
	12F_N38	Flat - Living Room			70	65	64	Yes
	12F_N39	Flat - Living Room			70	47	47	Yes

Predicted Road Traffic Noise Levels for 2045 (Base Case Scenario)

Floor	NAP ID	Description	Floor Height, mPD	Assessment Height, mPD	Noise Criteria, dB(A)	Unmitigated Noise Level, $L_{10\ (1\ hour)}$, dB(A)		Compliance
						AM	PM	
13/F	13F_N01	Flat - Bedroom	+86.95	+88.2	70	53	52	Yes
	13F_N02	Flat - Bedroom			70	52	52	Yes
	13F_N03	Flat - Living Room			70	52	52	Yes
	13F_N04	Flat - Bedroom			70	52	52	Yes
	13F_N05	Flat - Living Room			70	52	51	Yes
	13F_N06	Flat - Bedroom			70	51	51	Yes
	13F_N07	Flat - Bedroom			70	51	51	Yes
	13F_N08	Flat - Living Room			70	51	50	Yes
	13F_N09	Flat - Bedroom			70	50	50	Yes
	13F_N10	Flat - Living Room			70	50	50	Yes
	13F_N11	Flat - Bedroom			70	50	50	Yes
	13F_N12	Flat - Living Room			70	50	50	Yes
	13F_N13	Flat - Bedroom			70	49	49	Yes
	13F_N14	Flat - Bedroom			70	49	49	Yes
	13F_N15	Flat - Living Room			70	48	48	Yes
	13F_N16	Flat - Living Room			70	48	48	Yes
	13F_N17	Flat - Bedroom			70	48	48	Yes
	13F_N18	Flat - Living Room			70	60	60	Yes
	13F_N19	Flat - Living Room			70	62	62	Yes
	13F_N20	Flat - Living Room			70	69	69	Yes
	13F_N21	Flat - Bedroom			70	69	69	Yes
	13F_N22	Flat - Bedroom			70	69	69	Yes
	13F_N23	Flat - Living Room			70	68	68	Yes
	13F_N24	Flat - Bedroom			70	69	69	Yes
	13F_N25	Flat - Living Room			70	69	69	Yes
	13F_N26	Flat - Bedroom			70	69	69	Yes
	13F_N27	Flat - Bedroom			70	69	69	Yes
	13F_N28	Flat - Bedroom			70	69	69	Yes
	13F_N29	Flat - Living Room			70	69	69	Yes
	13F_N30	Flat - Bedroom			70	69	69	Yes
	13F_N31	Flat - Living Room			70	68	68	Yes
	13F_N32	Flat - Living Room			70	69	69	Yes
	13F_N33	Flat - Bedroom			70	69	69	Yes
	13F_N34	Flat - Living Room			70	70	70	Yes
	13F_N35	Flat - Bedroom			70	**73**	**72**	**No**
	13F_N36	Flat - Bedroom			70	**73**	**72**	**No**
	13F_N37	Flat - Bedroom			70	**72**	**72**	**No**
	13F_N38	Flat - Living Room			70	**72**	**72**	**No**
	13F_N39	Flat - Living Room			70	65	64	Yes
	13F_N40	Flat - Living Room			70	47	47	Yes
14/F	14F_N01	Flat - Bedroom	+90.03	+91.2	70	52	52	Yes
	14F_N02	Flat - Bedroom			70	52	52	Yes
	14F_N03	Flat - Living Room			70	52	52	Yes
	14F_N04	Flat - Bedroom			70	52	52	Yes
	14F_N05	Flat - Living Room			70	52	51	Yes
	14F_N06	Flat - Bedroom			70	51	51	Yes
	14F_N07	Flat - Bedroom			70	51	51	Yes
	14F_N08	Flat - Living Room			70	50	50	Yes
	14F_N09	Flat - Bedroom			70	50	50	Yes
	14F_N10	Flat - Living Room			70	50	50	Yes
	14F_N11	Flat - Bedroom			70	50	50	Yes
	14F_N12	Flat - Living Room			70	50	50	Yes
	14F_N13	Flat - Bedroom			70	49	49	Yes
	14F_N14	Flat - Living Room			70	49	49	Yes
	14F_N15	Flat - Bedroom			70	48	48	Yes
	14F_N16	Flat - Bedroom			70	48	48	Yes
	14F_N17	Flat - Living Room			70	48	48	Yes
	14F_N18	Flat - Bedroom			70	48	48	Yes
	14F_N19	Flat - Living Room			70	59	60	Yes
	14F_N20	Flat - Living Room			70	62	62	Yes
	14F_N21	Flat - Living Room			70	69	69	Yes
	14F_N22	Flat - Bedroom			70	69	69	Yes
	14F_N23	Flat - Bedroom			70	69	69	Yes
	14F_N24	Flat - Bedroom			70	68	68	Yes
	14F_N25	Flat - Bedroom			70	69	69	Yes
	14F_N26	Flat - Bedroom			70	69	69	Yes
	14F_N27	Flat - Living Room			70	69	69	Yes
	14F_N28	Flat - Bedroom			70	68	68	Yes
	14F_N29	Flat - Bedroom			70	69	69	Yes
	14F_N30	Flat - Living Room			70	69	69	Yes
	14F_N31	Flat - Bedroom			70	69	69	Yes
	14F_N32	Flat - Bedroom			70	69	69	Yes
	14F_N33	Flat - Living Room			70	68	68	Yes
	14F_N34	Flat - Living Room			70	69	69	Yes
	14F_N35	Flat - Bedroom			70	69	69	Yes
	14F_N36	Flat - Living Room			70	70	70	Yes
	14F_N37	Flat - Bedroom			70	**72**	**72**	**No**
	14F_N38	Flat - Bedroom			70	**72**	**72**	**No**
	14F_N39	Flat - Bedroom			70	**72**	**72**	**No**
	14F_N40	Flat - Living Room			70	**72**	**72**	**No**
	14F_N41	Flat - Living Room			70	65	64	Yes
	14F_N42	Flat - Living Room			70	47	47	Yes

Predicted Road Traffic Noise Levels for 2045 (Base Case Scenario)

Floor	NAP ID	Description	Floor Height, mPD	Assessment Height, mPD	Noise Criteria, dB(A)	Unmitigated Noise Level, $L_{10\ (1\ hour)}$, dB(A)		Compliance
						AM	PM	
15/F	15F_N01	Flat - Bedroom	+93.10	+94.3	70	52	52	Yes
	15F_N02	Flat - Bedroom			70	52	52	Yes
	15F_N03	Flat - Living Room			70	52	52	Yes
	15F_N04	Flat - Bedroom			70	52	52	Yes
	15F_N05	Flat - Living Room			70	51	51	Yes
	15F_N06	Flat - Bedroom			70	51	51	Yes
	15F_N07	Flat - Bedroom			70	51	50	Yes
	15F_N08	Flat - Living Room			70	50	50	Yes
	15F_N09	Flat - Bedroom			70	50	50	Yes
	15F_N10	Flat - Living Room			70	50	50	Yes
	15F_N11	Flat - Bedroom			70	50	50	Yes
	15F_N12	Flat - Living Room			70	50	50	Yes
	15F_N13	Flat - Bedroom			70	49	49	Yes
	15F_N14	Flat - Living Room			70	50	49	Yes
	15F_N15	Flat - Bedroom			70	48	48	Yes
	15F_N16	Flat - Bedroom			70	48	48	Yes
	15F_N17	Flat - Living Room			70	49	49	Yes
	15F_N18	Flat - Bedroom			70	49	49	Yes
	15F_N19	Flat - Living Room			70	59	60	Yes
	15F_N20	Flat - Living Room			70	62	62	Yes
	15F_N21	Flat - Living Room			70	69	69	Yes
	15F_N22	Flat - Bedroom			70	69	69	Yes
	15F_N23	Flat - Bedroom			70	69	69	Yes
	15F_N24	Flat - Bedroom			70	67	67	Yes
	15F_N25	Flat - Bedroom			70	69	69	Yes
	15F_N26	Flat - Bedroom			70	69	69	Yes
	15F_N27	Flat - Living Room			70	69	69	Yes
	15F_N28	Flat - Bedroom			70	68	68	Yes
	15F_N29	Flat - Bedroom			70	69	69	Yes
	15F_N30	Flat - Living Room			70	69	69	Yes
	15F_N31	Flat - Bedroom			70	69	69	Yes
	15F_N32	Flat - Bedroom			70	69	69	Yes
	15F_N33	Flat - Living Room			70	68	68	Yes
	15F_N34	Flat - Living Room			70	69	69	Yes
	15F_N35	Flat - Bedroom			70	69	69	Yes
	15F_N36	Flat - Bedroom			70	70	70	Yes
	15F_N37	Flat - Living Room			70	**71**	**71**	**No**
	15F_N38	Flat - Living Room			70	**72**	**71**	**No**
	15F_N39	Flat - Bedroom			70	**72**	**72**	**No**
	15F_N40	Flat - Living Room			70	**72**	**72**	**No**
	15F_N41	Flat - Living Room			70	65	64	Yes
	15F_N42	Flat - Living Room			70	47	47	Yes
16/F	16F_N01	Flat - Bedroom	+96.18	+97.4	70	52	52	Yes
	16F_N02	Flat - Bedroom			70	52	51	Yes
	16F_N03	Flat - Living Room			70	51	51	Yes
	16F_N04	Flat - Bedroom			70	51	51	Yes
	16F_N05	Flat - Living Room			70	50	50	Yes
	16F_N06	Flat - Bedroom			70	50	50	Yes
	16F_N07	Flat - Bedroom			70	49	49	Yes
	16F_N08	Flat - Living Room			70	49	49	Yes
	16F_N09	Flat - Bedroom			70	49	48	Yes
	16F_N10	Flat - Living Room			70	49	48	Yes
	16F_N11	Flat - Bedroom			70	48	48	Yes
	16F_N12	Flat - Living Room			70	49	48	Yes
	16F_N13	Flat - Bedroom			70	47	47	Yes
	16F_N14	Flat - Living Room			70	48	48	Yes
	16F_N15	Flat - Bedroom			70	46	46	Yes
	16F_N16	Flat - Bedroom			70	46	46	Yes
	16F_N17	Flat - Living Room			70	50	49	Yes
	16F_N18	Flat - Bedroom			70	69	69	Yes
	16F_N19	Flat - Bedroom			70	69	69	Yes
	16F_N20	Flat - Living Room			70	69	69	Yes
	16F_N21	Flat - Bedroom			70	69	69	Yes
	16F_N22	Flat - Bedroom			70	68	68	Yes
	16F_N23	Flat - Living Room			70	69	69	Yes
	16F_N24	Flat - Bedroom			70	69	69	Yes
	16F_N25	Flat - Bedroom			70	68	68	Yes
	16F_N26	Flat - Bedroom			70	69	69	Yes
	16F_N27	Flat - Living Room			70	69	69	Yes
	16F_N28	Flat - Bedroom			70	69	69	Yes
	16F_N29	Flat - Bedroom			70	68	69	Yes
	16F_N30	Flat - Living Room			70	68	68	Yes
	16F_N31	Flat - Living Room			70	68	68	Yes
	16F_N32	Flat - Bedroom			70	69	69	Yes
	16F_N33	Flat - Bedroom			70	70	70	Yes
	16F_N34	Flat - Living Room			70	70	70	Yes
	16F_N35	Flat - Living Room			70	**71**	**71**	**No**
	16F_N36	Flat - Bedroom			70	**72**	**72**	**No**
	16F_N37	Flat - Living Room			70	**72**	**71**	**No**
	16F_N38	Flat - Living Room			70	65	64	Yes
	16F_N39	Flat - Living Room			70	46	46	Yes

Predicted Road Traffic Noise Levels for 2045 (Base Case Scenario)

Floor	NAP ID	Description	Floor Height, mPD	Assessment Height, mPD	Noise Criteria, dB(A)	Unmitigated Noise Level, $L_{10\ (1\ hour)}$, dB(A)		Compliance
						AM	PM	
17/F	17F_N01	Flat - Bedroom	+99.25	+100.5	70	52	52	Yes
	17F_N02	Flat - Bedroom			70	52	52	Yes
	17F_N03	Flat - Living Room			70	51	51	Yes
	17F_N04	Flat - Bedroom			70	51	51	Yes
	17F_N05	Flat - Living Room			70	51	51	Yes
	17F_N06	Flat - Bedroom			70	50	50	Yes
	17F_N07	Flat - Bedroom			70	50	50	Yes
	17F_N08	Flat - Living Room			70	49	49	Yes
	17F_N09	Flat - Bedroom			70	49	49	Yes
	17F_N10	Flat - Living Room			70	49	49	Yes
	17F_N11	Flat - Bedroom			70	49	49	Yes
	17F_N12	Flat - Living Room			70	49	49	Yes
	17F_N13	Flat - Bedroom			70	48	48	Yes
	17F_N14	Flat - Living Room			70	49	49	Yes
	17F_N15	Flat - Bedroom			70	48	47	Yes
	17F_N16	Flat - Bedroom			70	48	47	Yes
	17F_N17	Flat - Living Room			70	52	51	Yes
	17F_N18	Flat - Bedroom			70	68	68	Yes
	17F_N19	Flat - Bedroom			70	69	69	Yes
	17F_N20	Flat - Living Room			70	69	69	Yes
	17F_N21	Flat - Bedroom			70	69	69	Yes
	17F_N22	Flat - Bedroom			70	68	68	Yes
	17F_N23	Flat - Living Room			70	69	69	Yes
	17F_N24	Flat - Bedroom			70	69	69	Yes
	17F_N25	Flat - Bedroom			70	68	68	Yes
	17F_N26	Flat - Bedroom			70	69	69	Yes
	17F_N27	Flat - Living Room			70	69	69	Yes
	17F_N28	Flat - Bedroom			70	69	69	Yes
	17F_N29	Flat - Bedroom			70	68	68	Yes
	17F_N30	Flat - Living Room			70	68	68	Yes
	17F_N31	Flat - Living Room			70	68	68	Yes
	17F_N32	Flat - Bedroom			70	68	68	Yes
	17F_N33	Flat - Bedroom			70	69	69	Yes
	17F_N34	Flat - Living Room			70	70	70	Yes
	17F_N35	Flat - Living Room			70	**71**	**71**	**No**
	17F_N36	Flat - Bedroom			70	**72**	**71**	**No**
	17F_N37	Flat - Living Room			70	**72**	**71**	**No**
	17F_N38	Flat - Living Room			70	65	64	Yes
	17F_N39	Flat - Living Room			70	47	48	Yes
18/F	18F_N01	Flat - Bedroom	+102.33	+103.5	70	52	52	Yes
	18F_N02	Flat - Bedroom			70	52	52	Yes
	18F_N03	Flat - Living Room			70	52	52	Yes
	18F_N04	Flat - Bedroom			70	52	51	Yes
	18F_N05	Flat - Living Room			70	51	51	Yes
	18F_N06	Flat - Bedroom			70	51	51	Yes
	18F_N07	Flat - Bedroom			70	51	50	Yes
	18F_N08	Flat - Living Room			70	50	50	Yes
	18F_N09	Flat - Bedroom			70	50	50	Yes
	18F_N10	Flat - Living Room			70	50	50	Yes
	18F_N11	Flat - Bedroom			70	50	50	Yes
	18F_N12	Flat - Living Room			70	50	50	Yes
	18F_N13	Flat - Bedroom			70	49	49	Yes
	18F_N14	Flat - Living Room			70	50	50	Yes
	18F_N15	Flat - Bedroom			70	49	49	Yes
	18F_N16	Flat - Bedroom			70	49	49	Yes
	18F_N17	Flat - Living Room			70	53	53	Yes
	18F_N18	Flat - Bedroom			70	68	68	Yes
	18F_N19	Flat - Bedroom			70	68	68	Yes
	18F_N20	Flat - Living Room			70	69	69	Yes
	18F_N21	Flat - Bedroom			70	68	68	Yes
	18F_N22	Flat - Bedroom			70	68	68	Yes
	18F_N23	Flat - Living Room			70	69	69	Yes
	18F_N24	Flat - Bedroom			70	69	69	Yes
	18F_N25	Flat - Bedroom			70	68	68	Yes
	18F_N26	Flat - Bedroom			70	69	69	Yes
	18F_N27	Flat - Living Room			70	69	69	Yes
	18F_N28	Flat - Bedroom			70	68	68	Yes
	18F_N29	Flat - Bedroom			70	68	68	Yes
	18F_N30	Flat - Living Room			70	68	68	Yes
	18F_N31	Flat - Living Room			70	68	68	Yes
	18F_N32	Flat - Bedroom			70	68	68	Yes
	18F_N33	Flat - Bedroom			70	69	69	Yes
	18F_N34	Flat - Living Room			70	70	70	Yes
	18F_N35	Flat - Living Room			70	**71**	**71**	**No**
	18F_N36	Flat - Bedroom			70	**72**	**71**	**No**
	18F_N37	Flat - Living Room			70	**71**	**71**	**No**
	18F_N38	Flat - Living Room			70	65	65	Yes
	18F_N39	Flat - Living Room			70	49	50	Yes

Predicted Road Traffic Noise Levels for 2045 (Base Case Scenario)

Floor	NAP ID	Description	Floor Height, mPD	Assessment Height, mPD	Noise Criteria, dB(A)	Unmitigated Noise Level, $L_{10\ (1\ hour)}$, dB(A)		Compliance
						AM	PM	
19/F	19F_N01	Flat - Bedroom	+105.40	+106.6	70	52	52	Yes
	19F_N02	Flat - Bedroom			70	52	51	Yes
	19F_N03	Flat - Living Room			70	51	51	Yes
	19F_N04	Flat - Bedroom			70	51	51	Yes
	19F_N05	Flat - Living Room			70	51	50	Yes
	19F_N06	Flat - Bedroom			70	50	50	Yes
	19F_N07	Flat - Bedroom			70	50	50	Yes
	19F_N08	Flat - Living Room			70	50	49	Yes
	19F_N09	Flat - Bedroom			70	49	49	Yes
	19F_N10	Flat - Living Room			70	49	49	Yes
	19F_N11	Flat - Bedroom			70	50	50	Yes
	19F_N12	Flat - Living Room			70	50	50	Yes
	19F_N13	Flat - Bedroom			70	50	49	Yes
	19F_N14	Flat - Living Room			70	51	50	Yes
	19F_N15	Flat - Bedroom			70	50	49	Yes
	19F_N16	Flat - Bedroom			70	50	50	Yes
	19F_N17	Flat - Living Room			70	53	53	Yes
	19F_N18	Flat - Bedroom			70	68	68	Yes
	19F_N19	Flat - Bedroom			70	68	68	Yes
	19F_N20	Flat - Living Room			70	69	68	Yes
	19F_N21	Flat - Bedroom			70	68	68	Yes
	19F_N22	Flat - Bedroom			70	68	68	Yes
	19F_N23	Flat - Living Room			70	69	69	Yes
	19F_N24	Flat - Bedroom			70	69	69	Yes
	19F_N25	Flat - Bedroom			70	68	68	Yes
	19F_N26	Flat - Bedroom			70	68	68	Yes
	19F_N27	Flat - Living Room			70	68	68	Yes
	19F_N28	Flat - Bedroom			70	68	68	Yes
	19F_N29	Flat - Living Room			70	68	68	Yes
	19F_N30	Flat - Living Room			70	68	68	Yes
	19F_N31	Flat - Bedroom			70	68	68	Yes
	19F_N32	Flat - Bedroom			70	68	68	Yes
	19F_N33	Flat - Bedroom			70	69	69	Yes
	19F_N34	Flat - Living Room			70	70	70	Yes
	19F_N35	Flat - Living Room			70	**71**	**71**	**No**
	19F_N36	Flat - Bedroom			70	**71**	**71**	**No**
	19F_N37	Flat - Living Room			70	**71**	**71**	**No**
	19F_N38	Flat - Living Room			70	65	65	Yes
	19F_N39	Flat - Living Room			70	49	50	Yes
20/F	20F_N01	Flat - Bedroom	+108.48	+109.7	70	52	52	Yes
	20F_N02	Flat - Bedroom			70	52	52	Yes
	20F_N03	Flat - Living Room			70	52	52	Yes
	20F_N04	Flat - Bedroom			70	52	52	Yes
	20F_N05	Flat - Living Room			70	52	51	Yes
	20F_N06	Flat - Bedroom			70	52	51	Yes
	20F_N07	Flat - Bedroom			70	51	51	Yes
	20F_N08	Flat - Living Room			70	51	51	Yes
	20F_N09	Flat - Bedroom			70	51	50	Yes
	20F_N10	Flat - Living Room			70	51	50	Yes
	20F_N11	Flat - Bedroom			70	51	51	Yes
	20F_N12	Flat - Living Room			70	52	52	Yes
	20F_N13	Flat - Bedroom			70	52	51	Yes
	20F_N14	Flat - Living Room			70	52	52	Yes
	20F_N15	Flat - Bedroom			70	52	51	Yes
	20F_N16	Flat - Bedroom			70	52	51	Yes
	20F_N17	Flat - Living Room			70	54	54	Yes
	20F_N18	Flat - Bedroom			70	68	68	Yes
	20F_N19	Flat - Bedroom			70	68	68	Yes
	20F_N20	Flat - Living Room			70	68	68	Yes
	20F_N21	Flat - Bedroom			70	68	68	Yes
	20F_N22	Flat - Bedroom			70	68	68	Yes
	20F_N23	Flat - Living Room			70	68	68	Yes
	20F_N24	Flat - Bedroom			70	69	68	Yes
	20F_N25	Flat - Bedroom			70	67	67	Yes
	20F_N26	Flat - Bedroom			70	68	68	Yes
	20F_N27	Flat - Living Room			70	68	68	Yes
	20F_N28	Flat - Bedroom			70	68	68	Yes
	20F_N29	Flat - Living Room			70	68	68	Yes
	20F_N30	Flat - Living Room			70	68	68	Yes
	20F_N31	Flat - Bedroom			70	68	68	Yes
	20F_N32	Flat - Bedroom			70	68	68	Yes
	20F_N33	Flat - Bedroom			70	69	69	Yes
	20F_N34	Flat - Living Room			70	70	70	Yes
	20F_N35	Flat - Living Room			70	**71**	70	**No**
	20F_N36	Flat - Bedroom			70	**71**	**71**	**No**
	20F_N37	Flat - Living Room			70	**71**	**71**	**No**
	20F_N38	Flat - Living Room			70	66	65	Yes
	20F_N39	Flat - Living Room			70	51	51	Yes

Predicted Road Traffic Noise Levels for 2045 (Base Case Scenario)

Floor	NAP ID	Description	Floor Height, mPD	Assessment Height, mPD	Noise Criteria, dB(A)	Unmitigated Noise Level, $L_{10\ (1\ hour)}$, dB(A)		Compliance
						AM	PM	
	21F_N01	Flat - Bedroom			70	52	51	Yes
	21F_N02	Flat - Bedroom			70	51	51	Yes
	21F_N03	Flat - Living Room			70	51	51	Yes
	21F_N04	Flat - Bedroom			70	51	51	Yes
	21F_N05	Flat - Living Room			70	50	50	Yes
	21F_N06	Flat - Bedroom			70	50	50	Yes
	21F_N07	Flat - Bedroom			70	50	50	Yes
	21F_N08	Flat - Living Room			70	49	49	Yes
	21F_N09	Flat - Bedroom			70	49	49	Yes
	21F_N10	Flat - Living Room			70	49	49	Yes
	21F_N11	Flat - Bedroom			70	50	50	Yes
	21F_N12	Flat - Living Room			70	51	51	Yes
	21F_N13	Flat - Bedroom			70	51	51	Yes
	21F_N14	Flat - Living Room			70	52	51	Yes
	21F_N15	Flat - Bedroom			70	51	51	Yes
	21F_N16	Flat - Bedroom			70	52	51	Yes
	21F_N17	Flat - Living Room			70	54	53	Yes
	21F_N18	Flat - Bedroom			70	68	68	Yes
	21F_N19	Flat - Bedroom			70	68	68	Yes
21/F	21F_N20	Flat - Living Room	+111.55	+112.8	70	68	68	Yes
	21F_N21	Flat - Bedroom			70	68	68	Yes
	21F_N22	Flat - Bedroom			70	67	68	Yes
	21F_N23	Flat - Living Room			70	68	68	Yes
	21F_N24	Flat - Bedroom			70	68	68	Yes
	21F_N25	Flat - Living Room			70	67	67	Yes
	21F_N26	Flat - Bedroom			70	68	68	Yes
	21F_N27	Flat - Bedroom			70	66	66	Yes
	21F_N28	Flat - Bedroom			70	68	68	Yes
	21F_N29	Flat - Living Room			70	68	68	Yes
	21F_N30	Flat - Living Room			70	68	68	Yes
	21F_N31	Flat - Bedroom			70	68	68	Yes
	21F_N32	Flat - Bedroom			70	68	68	Yes
	21F_N33	Flat - Bedroom			70	69	69	Yes
	21F_N34	Flat - Living Room			70	70	69	Yes
	21F_N35	Flat - Living Room			70	**71**	70	**No**
	21F_N36	Flat - Bedroom			70	**71**	**71**	**No**
	21F_N37	Flat - Living Room			70	**71**	**71**	**No**
	21F_N38	Flat - Living Room			70	66	65	Yes
	21F_N39	Flat - Living Room			70	50	50	Yes
	22F_N01	Flat - Bedroom			70	52	52	Yes
	22F_N02	Flat - Bedroom			70	52	52	Yes
	22F_N03	Flat - Living Room			70	52	51	Yes
	22F_N04	Flat - Bedroom			70	52	51	Yes
	22F_N05	Flat - Living Room			70	51	51	Yes
	22F_N06	Flat - Bedroom			70	51	51	Yes
	22F_N07	Flat - Bedroom			70	51	51	Yes
	22F_N08	Flat - Living Room			70	51	50	Yes
	22F_N09	Flat - Bedroom			70	50	50	Yes
	22F_N10	Flat - Living Room			70	51	50	Yes
	22F_N11	Flat - Bedroom			70	51	51	Yes
	22F_N12	Flat - Living Room			70	52	52	Yes
	22F_N13	Flat - Bedroom			70	52	52	Yes
	22F_N14	Flat - Living Room			70	53	52	Yes
	22F_N15	Flat - Bedroom			70	52	52	Yes
	22F_N16	Flat - Bedroom			70	52	52	Yes
	22F_N17	Flat - Living Room			70	54	54	Yes
	22F_N18	Flat - Bedroom			70	68	68	Yes
	22F_N19	Flat - Bedroom			70	68	68	Yes
22/F	22F_N20	Flat - Living Room	+114.63	+115.8	70	68	68	Yes
	22F_N21	Flat - Bedroom			70	68	68	Yes
	22F_N22	Flat - Bedroom			70	67	67	Yes
	22F_N23	Flat - Living Room			70	68	68	Yes
	22F_N24	Flat - Bedroom			70	68	68	Yes
	22F_N25	Flat - Living Room			70	67	67	Yes
	22F_N26	Flat - Bedroom			70	68	68	Yes
	22F_N27	Flat - Bedroom			70	66	66	Yes
	22F_N28	Flat - Bedroom			70	68	68	Yes
	22F_N29	Flat - Living Room			70	68	68	Yes
	22F_N30	Flat - Living Room			70	67	67	Yes
	22F_N31	Flat - Bedroom			70	68	68	Yes
	22F_N32	Flat - Bedroom			70	68	68	Yes
	22F_N33	Flat - Bedroom			70	69	69	Yes
	22F_N34	Flat - Living Room			70	69	69	Yes
	22F_N35	Flat - Living Room			70	70	70	Yes
	22F_N36	Flat - Bedroom			70	**71**	**71**	**No**
	22F_N37	Flat - Living Room			70	**71**	**71**	**No**
	22F_N38	Flat - Living Room			70	66	66	Yes
	22F_N39	Flat - Living Room			70	51	51	Yes

Predicted Road Traffic Noise Levels for 2045 (Base Case Scenario)

Floor	NAP ID	Description	Floor Height, mPD	Assessment Height, mPD	Noise Criteria, dB(A)	Unmitigated Noise Level, $L_{10\ (1\ hour)}$, dB(A)		Compliance
						AM	PM	
23/F	23F_N01	Flat - Bedroom	+117.70	+118.9	70	52	52	Yes
	23F_N02	Flat - Bedroom			70	52	52	Yes
	23F_N03	Flat - Living Room			70	52	51	Yes
	23F_N04	Flat - Bedroom			70	52	51	Yes
	23F_N05	Flat - Living Room			70	51	51	Yes
	23F_N06	Flat - Bedroom			70	51	51	Yes
	23F_N07	Flat - Bedroom			70	51	51	Yes
	23F_N08	Flat - Living Room			70	51	50	Yes
	23F_N09	Flat - Bedroom			70	51	50	Yes
	23F_N10	Flat - Living Room			70	51	50	Yes
	23F_N11	Flat - Living Room			70	52	52	Yes
	23F_N12	Flat - Bedroom			70	52	52	Yes
	23F_N13	Flat - Living Room			70	53	52	Yes
	23F_N14	Flat - Bedroom			70	53	52	Yes
	23F_N15	Flat - Bedroom			70	53	52	Yes
	23F_N16	Flat - Living Room			70	54	54	Yes
	23F_N17	Flat - Bedroom			70	68	68	Yes
	23F_N18	Flat - Bedroom			70	68	68	Yes
	23F_N19	Flat - Living Room			70	68	68	Yes
	23F_N20	Flat - Bedroom			70	68	68	Yes
	23F_N21	Flat - Bedroom			70	67	67	Yes
	23F_N22	Flat - Living Room			70	68	68	Yes
	23F_N23	Flat - Bedroom			70	68	68	Yes
	23F_N24	Flat - Living Room			70	67	67	Yes
	23F_N25	Flat - Bedroom			70	68	68	Yes
	23F_N26	Flat - Bedroom			70	66	66	Yes
	23F_N27	Flat - Bedroom			70	68	68	Yes
	23F_N28	Flat - Living Room			70	68	68	Yes
	23F_N29	Flat - Living Room			70	67	67	Yes
	23F_N30	Flat - Bedroom			70	68	68	Yes
	23F_N31	Flat - Bedroom			70	68	68	Yes
	23F_N32	Flat - Bedroom			70	68	68	Yes
	23F_N33	Flat - Living Room			70	69	69	Yes
	23F_N34	Flat - Living Room			70	70	70	Yes
	23F_N35	Flat - Bedroom			70	**71**	**71**	**No**
	23F_N36	Flat - Living Room			70	**71**	**71**	**No**
	23F_N37	Flat - Living Room			70	66	66	Yes
	23F_N38	Flat - Living Room			70	51	51	Yes
24/F	24F_N01	Flat - Bedroom	+120.78	+122.0	70	51	51	Yes
	24F_N02	Flat - Bedroom			70	51	51	Yes
	24F_N03	Flat - Living Room			70	50	50	Yes
	24F_N04	Flat - Bedroom			70	51	50	Yes
	24F_N05	Flat - Living Room			70	50	50	Yes
	24F_N06	Flat - Bedroom			70	50	49	Yes
	24F_N07	Flat - Bedroom			70	49	49	Yes
	24F_N08	Flat - Living Room			70	49	49	Yes
	24F_N09	Flat - Bedroom			70	49	49	Yes
	24F_N10	Flat - Living Room			70	49	49	Yes
	24F_N11	Flat - Living Room			70	52	51	Yes
	24F_N12	Flat - Bedroom			70	52	51	Yes
	24F_N13	Flat - Living Room			70	52	52	Yes
	24F_N14	Flat - Bedroom			70	52	52	Yes
	24F_N15	Flat - Living Room			70	54	53	Yes
	24F_N16	Flat - Bedroom			70	67	67	Yes
	24F_N17	Flat - Bedroom			70	68	68	Yes
	24F_N18	Flat - Living Room			70	68	68	Yes
	24F_N19	Flat - Bedroom			70	68	68	Yes
	24F_N20	Flat - Bedroom			70	67	67	Yes
	24F_N21	Flat - Living Room			70	68	68	Yes
	24F_N22	Flat - Bedroom			70	68	68	Yes
	24F_N23	Flat - Living Room			70	67	67	Yes
	24F_N24	Flat - Bedroom			70	68	68	Yes
	24F_N25	Flat - Bedroom			70	66	66	Yes
	24F_N26	Flat - Bedroom			70	68	68	Yes
	24F_N27	Flat - Living Room			70	67	67	Yes
	24F_N28	Flat - Living Room			70	67	67	Yes
	24F_N29	Flat - Bedroom			70	67	67	Yes
	24F_N30	Flat - Bedroom			70	68	68	Yes
	24F_N31	Flat - Bedroom			70	68	68	Yes
	24F_N32	Flat - Living Room			70	69	69	Yes
	24F_N33	Flat - Living Room			70	70	70	Yes
	24F_N34	Flat - Bedroom			70	**71**	**71**	**No**
	24F_N35	Flat - Living Room			70	**71**	**71**	**No**
	24F_N36	Flat - Living Room			70	66	66	Yes
	24F_N37	Flat - Living Room			70	50	51	Yes

Predicted Road Traffic Noise Levels for 2045 (Base Case Scenario)

Floor	NAP ID	Description	Floor Height, mPD	Assessment Height, mPD	Noise Criteria, dB(A)	Unmitigated Noise Level, $L_{10\ (1\ hour)}$, dB(A)		Compliance
						AM	PM	
25/F	25F_N01	Flat - Bedroom	+123.85	+125.1	70	52	51	Yes
	25F_N02	Flat - Bedroom			70	51	51	Yes
	25F_N03	Flat - Living Room			70	51	51	Yes
	25F_N04	Flat - Bedroom			70	51	51	Yes
	25F_N05	Flat - Living Room			70	50	50	Yes
	25F_N06	Flat - Bedroom			70	50	50	Yes
	25F_N07	Flat - Bedroom			70	50	50	Yes
	25F_N08	Flat - Living Room			70	50	50	Yes
	25F_N09	Flat - Bedroom			70	50	50	Yes
	25F_N10	Flat - Living Room			70	50	50	Yes
	25F_N11	Flat - Living Room			70	52	52	Yes
	25F_N12	Flat - Bedroom			70	52	52	Yes
	25F_N13	Flat - Living Room			70	53	52	Yes
	25F_N14	Flat - Bedroom			70	53	52	Yes
	25F_N15	Flat - Living Room			70	54	54	Yes
	25F_N16	Flat - Bedroom			70	67	67	Yes
	25F_N17	Flat - Bedroom			70	68	68	Yes
	25F_N18	Flat - Living Room			70	68	68	Yes
	25F_N19	Flat - Bedroom			70	67	67	Yes
	25F_N20	Flat - Bedroom			70	67	67	Yes
	25F_N21	Flat - Living Room			70	68	68	Yes
	25F_N22	Flat - Bedroom			70	68	68	Yes
	25F_N23	Flat - Living Room			70	67	67	Yes
	25F_N24	Flat - Bedroom			70	68	68	Yes
	25F_N25	Flat - Bedroom			70	66	66	Yes
	25F_N26	Flat - Bedroom			70	67	67	Yes
	25F_N27	Flat - Living Room			70	67	67	Yes
	25F_N28	Flat - Living Room			70	67	67	Yes
	25F_N29	Flat - Bedroom			70	67	67	Yes
	25F_N30	Flat - Bedroom			70	68	68	Yes
	25F_N31	Flat - Bedroom			70	68	68	Yes
	25F_N32	Flat - Living Room			70	69	69	Yes
	25F_N33	Flat - Living Room			70	70	70	Yes
	25F_N34	Flat - Bedroom			70	**71**	**71**	**No**
	25F_N35	Flat - Living Room			70	**71**	**71**	**No**
	25F_N36	Flat - Living Room			70	66	66	Yes
	25F_N37	Flat - Living Room			70	51	51	Yes
26/F	26F_N01	Flat - Bedroom	+126.93	+128.1	70	52	52	Yes
	26F_N02	Flat - Bedroom			70	52	52	Yes
	26F_N03	Flat - Living Room			70	52	51	Yes
	26F_N04	Flat - Bedroom			70	52	52	Yes
	26F_N05	Flat - Living Room			70	51	51	Yes
	26F_N06	Flat - Bedroom			70	51	51	Yes
	26F_N07	Flat - Bedroom			70	51	51	Yes
	26F_N08	Flat - Living Room			70	51	51	Yes
	26F_N09	Flat - Bedroom			70	51	51	Yes
	26F_N10	Flat - Living Room			70	52	51	Yes
	26F_N11	Flat - Living Room			70	53	52	Yes
	26F_N12	Flat - Bedroom			70	53	52	Yes
	26F_N13	Flat - Living Room			70	53	53	Yes
	26F_N14	Flat - Bedroom			70	53	53	Yes
	26F_N15	Flat - Living Room			70	54	54	Yes
	26F_N16	Flat - Bedroom			70	67	67	Yes
	26F_N17	Flat - Bedroom			70	67	67	Yes
	26F_N18	Flat - Living Room			70	68	68	Yes
	26F_N19	Flat - Bedroom			70	67	67	Yes
	26F_N20	Flat - Bedroom			70	67	67	Yes
	26F_N21	Flat - Living Room			70	68	68	Yes
	26F_N22	Flat - Bedroom			70	68	68	Yes
	26F_N23	Flat - Living Room			70	67	67	Yes
	26F_N24	Flat - Bedroom			70	68	68	Yes
	26F_N25	Flat - Bedroom			70	66	66	Yes
	26F_N26	Flat - Bedroom			70	67	67	Yes
	26F_N27	Flat - Living Room			70	67	67	Yes
	26F_N28	Flat - Living Room			70	67	67	Yes
	26F_N29	Flat - Bedroom			70	67	67	Yes
	26F_N30	Flat - Bedroom			70	67	67	Yes
	26F_N31	Flat - Bedroom			70	68	68	Yes
	26F_N32	Flat - Living Room			70	69	69	Yes
	26F_N33	Flat - Living Room			70	70	70	Yes
	26F_N34	Flat - Bedroom			70	**71**	70	**No**
	26F_N35	Flat - Living Room			70	**71**	70	**No**
	26F_N36	Flat - Living Room			70	67	66	Yes
	26F_N37	Flat - Living Room			70	52	52	Yes

Results Summary	
Total No. of NAPs	860
Total No. of NAPs with exceedance	103
Compliance Rate	88%

APPENDIX 2.3

ESTIMATED SOUND ATTENUATION OF ACOUSTIC WINDOWS

Proposed Types of Acoustic Window (Baffle Type)

Type of AW(BT)	Reference Case	Room Area, m^2	Noise Attenuation, dB(A)	Inner Window Opening, mm		Outer Window Opening, mm		Window Overlapping Length, mm	Window Pane Separation, mm	MPA[1] Applied?
				Height	Width	Height	Width			
Type 1	EPD	8	6	870	580	870	600	100	100	No
Type 2	EPD	18	7	1500	750	1500	750	100	100	No

Notes:
[1] MPA: Micro-Perforated Absorber

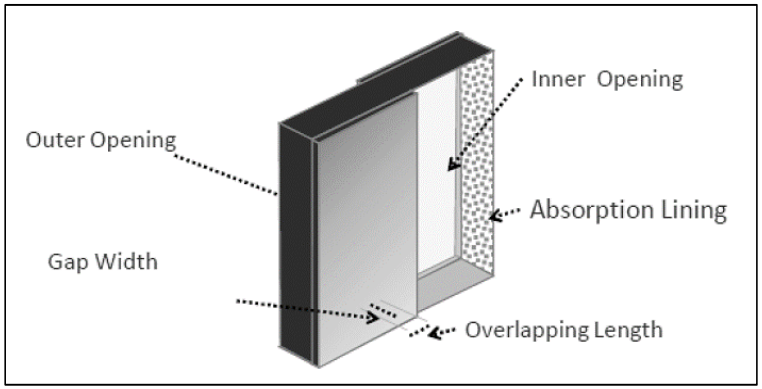

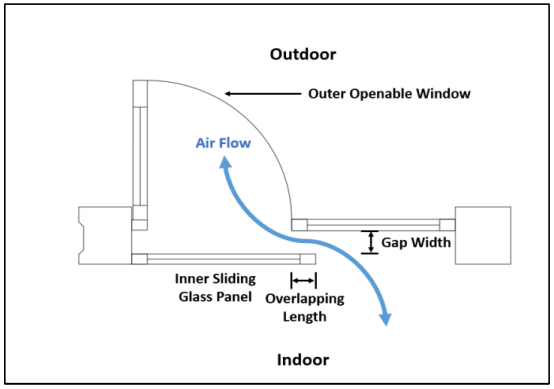

Noise Reduction Performance of the Proposed Acoustic Window (Baffle Type)

Project Case					Reference Case										
Floor	NAP ID	Room	Room Area (RA), m^2	Proposed Type of AW(BT)	Inner Window Opening, mm		Outer Window Opening, mm		Window Overlapping Length, mm	Window Pane Separation, mm	MPA Applied?	Room Area (RA_{ref}), m^2	Reduction Performance, dB(A)	Correction for Room Area[1,3], dB(A)	Adjusted Noise Attenuation[2], dB(A)
					Height	Width	Height	Width							
6/F	6F_N12	RCHE Dormitory	14.3	Type 2	1500	750	1500	750	100	100	No	18.0	7	-1.0	6.0
6/F	6F_N13	RCHE Dormitory	11.3	Type 2	1500	750	1500	750	100	100	No	18.0	7	-2.0	5.0
6/F	6F_N14	RCHE Dormitory	7.9	Type 1	870	580	870	600	100	100	No	8.0	6	-0.1	5.9
6/F	6F_N15	RCHE Dormitory	11.0	Type 2	1500	750	1500	750	100	100	No	18.0	7	-2.1	4.9
6/F	6F_N16	RCHE Dormitory	11.4	Type 2	1500	750	1500	750	100	100	No	18.0	7	-2.0	5.0
6/F	6F_N17	RCHE Dormitory	11.0	Type 2	1500	750	1500	750	100	100	No	18.0	7	-2.1	4.9
6/F	6F_N18	RCHE Dormitory	18.0	Type 2	1500	750	1500	750	100	100	No	18.0	7	0.0	7.0
9/F	9F_N34	Flat - Bedroom	5.3	Type 1	870	580	870	600	100	100	No	8.0	6	-1.8	4.2
9/F	9F_N35	Flat - Bedroom	6.5	Type 1	870	580	870	600	100	100	No	8.0	6	-0.9	5.1
9/F	9F_N36	Flat - Bedroom	5.8	Type 1	870	580	870	600	100	100	No	8.0	6	-1.4	4.6
9/F	9F_N37	Flat - Living Room	16.3	Type 2	1500	750	1500	750	100	100	No	18.0	7	-0.4	6.6
10/F	10F_N34	Flat - Bedroom	5.3	Type 1	870	580	870	600	100	100	No	8.0	6	-1.8	4.2
10/F	10F_N35	Flat - Bedroom	6.5	Type 1	870	580	870	600	100	100	No	8.0	6	-0.9	5.1
10/F	10F_N36	Flat - Bedroom	5.8	Type 1	870	580	870	600	100	100	No	8.0	6	-1.4	4.6
10/F	10F_N37	Flat - Living Room	16.3	Type 2	1500	750	1500	750	100	100	No	18.0	7	-0.4	6.6
11/F	11F_N34	Flat - Bedroom	5.3	Type 1	870	580	870	600	100	100	No	8.0	6	-1.8	4.2
11/F	11F_N35	Flat - Bedroom	6.5	Type 1	870	580	870	600	100	100	No	8.0	6	-0.9	5.1
11/F	11F_N36	Flat - Bedroom	5.8	Type 1	870	580	870	600	100	100	No	8.0	6	-1.4	4.6
11/F	11F_N37	Flat - Living Room	16.3	Type 2	1500	750	1500	750	100	100	No	18.0	7	-0.4	6.6
12/F	12F_N34	Flat - Bedroom	5.3	Type 1	870	580	870	600	100	100	No	8.0	6	-1.8	4.2
12/F	12F_N35	Flat - Bedroom	6.5	Type 1	870	580	870	600	100	100	No	8.0	6	-0.9	5.1
12/F	12F_N36	Flat - Bedroom	5.8	Type 1	870	580	870	600	100	100	No	8.0	6	-1.4	4.6
12/F	12F_N37	Flat - Living Room	16.3	Type 2	1500	750	1500	750	100	100	No	18.0	7	-0.4	6.6
13/F	13F_N35	Flat - Bedroom	5.3	Type 1	870	580	870	600	100	100	No	8.0	6	-1.8	4.2
13/F	13F_N36	Flat - Bedroom	6.5	Type 1	870	580	870	600	100	100	No	8.0	6	-0.9	5.1
13/F	13F_N37	Flat - Bedroom	5.8	Type 1	870	580	870	600	100	100	No	8.0	6	-1.4	4.6
13/F	13F_N38	Flat - Living Room	16.3	Type 2	1500	750	1500	750	100	100	No	18.0	7	-0.4	6.6
14/F	14F_N37	Flat - Bedroom	5.3	Type 1	870	580	870	600	100	100	No	8.0	6	-1.8	4.2
14/F	14F_N38	Flat - Bedroom	6.5	Type 1	870	580	870	600	100	100	No	8.0	6	-0.9	5.1
14/F	14F_N39	Flat - Bedroom	5.8	Type 1	870	580	870	600	100	100	No	8.0	6	-1.4	4.6
14/F	14F_N40	Flat - Living Room	16.3	Type 2	1500	750	1500	750	100	100	No	18.0	7	-0.4	6.6
15/F	15F_N39	Flat - Bedroom	5.8	Type 1	870	580	870	600	100	100	No	8.0	6	-1.4	4.6
15/F	15F_N40	Flat - Living Room	16.3	Type 2	1500	750	1500	750	100	100	No	18.0	7	-0.4	6.6
16/F	16F_N36	Flat - Bedroom	5.8	Type 1	870	580	870	600	100	100	No	8.0	6	-1.4	4.6
16/F	16F_N37	Flat - Living Room	16.3	Type 2	1500	750	1500	750	100	100	No	18.0	7	-0.4	6.6
17/F	17F_N36	Flat - Bedroom	5.8	Type 1	870	580	870	600	100	100	No	8.0	6	-1.4	4.6
17/F	17F_N37	Flat - Living Room	16.3	Type 2	1500	750	1500	750	100	100	No	18.0	7	-0.4	6.6
18/F	18F_N36	Flat - Bedroom	5.8	Type 1	870	580	870	600	100	100	No	8.0	6	-1.4	4.6
18/F	18F_N37	Flat - Living Room	16.3	Type 2	1500	750	1500	750	100	100	No	18.0	7	-0.4	6.6

Noise Reduction Performance of the Proposed Acoustic Window (Baffle Type)

Project Case					Reference Case										
Floor	NAP ID	Room	Room Area (RA), m^2	Proposed Type of AW(BT)	Inner Window Opening, mm		Outer Window Opening, mm		Window Overlapping Length, mm	Window Pane Separation, mm	MPA Applied?	Room Area (RA_{ref}), m^2	Reduction Performance, dB(A)	Correction for Room Area[1,3], dB(A)	Adjusted Noise Attenuation[2], dB(A)
					Height	Width	Height	Width							
19/F	19F_N36	Flat - Bedroom	5.8	Type 1	870	580	870	600	100	100	No	8.0	6	-1.4	4.6
19/F	19F_N37	Flat - Living Room	16.3	Type 2	1500	750	1500	750	100	100	No	18.0	7	-0.4	6.6
20/F	20F_N36	Flat - Bedroom	5.8	Type 1	870	580	870	600	100	100	No	8.0	6	-1.4	4.6
20/F	20F_N37	Flat - Living Room	16.3	Type 2	1500	750	1500	750	100	100	No	18.0	7	-0.4	6.6
21/F	21F_N36	Flat - Bedroom	5.8	Type 1	870	580	870	600	100	100	No	8.0	6	-1.4	4.6
21/F	21F_N37	Flat - Living Room	16.3	Type 2	1500	750	1500	750	100	100	No	18.0	7	-0.4	6.6
22/F	22F_N36	Flat - Bedroom	5.8	Type 1	870	580	870	600	100	100	No	8.0	6	-1.4	4.6
22/F	22F_N37	Flat - Living Room	16.3	Type 2	1500	750	1500	750	100	100	No	18.0	7	-0.4	6.6
23/F	23F_N35	Flat - Bedroom	5.8	Type 1	870	580	870	600	100	100	No	8.0	6	-1.4	4.6
23/F	23F_N36	Flat - Living Room	16.3	Type 2	1500	750	1500	750	100	100	No	18.0	7	-0.4	6.6
24/F	24F_N34	Flat - Bedroom	5.8	Type 1	870	580	870	600	100	100	No	8.0	6	-1.4	4.6
24/F	24F_N35	Flat - Living Room	16.3	Type 2	1500	750	1500	750	100	100	No	18.0	7	-0.4	6.6
25/F	25F_N34	Flat - Bedroom	5.8	Type 1	870	580	870	600	100	100	No	8.0	6	-1.4	4.6
25/F	25F_N35	Flat - Living Room	16.3	Type 2	1500	750	1500	750	100	100	No	18.0	7	-0.4	6.6
26/F	26F_N34	Flat - Bedroom	5.8	Type 1	870	580	870	600	100	100	No	8.0	6	-1.4	4.6
26/F	26F_N35	Flat - Living Room	16.3	Type 2	1500	750	1500	750	100	100	No	18.0	7	-0.4	6.6

Notes:

[1] Correction for room area is calculated by 10 log (RA / RA_{ref}).

[2] As a conservative approach, the noise reduction performance of the proposed acoustic window is adjusted (downward only) based on the relative room size of the project case and reference case. In case the room size of the project case is larger than the reference case or opening size of the conventional window in the project case is larger than the reference case, no adjustment is made.

APPENDIX 2.4

DETAILED RESULTS OF ROAD TRAFFIC NOISE ASSESSMENT

(MITIGATED SCENARIO)

Predicted Road Traffic Noise Levels for 2045 (Mitigated Scenario)

Floor	NAP ID	Description	Floor Height, mPD	Assessment Height, mPD	Noise Criteria, dB(A)	Unmitigated Noise Level, $L_{10\ (1\ hour)}$, dB(A)		Proposed Noise Mitigation Measures	Estimated Noise Attenuation, dB(A)	Mitigated Noise Level, $L_{10\ (1\ hour)}$, dB(A)	Compliance
						AM	PM				
G/F	GF_N01	RCHD Interview Room	+42.40	+43.6	70	58	58	N/A	N/A	58	Yes
	GF_N02	RCHD Administration Section			70	57	57	N/A	N/A	57	Yes
	GF_N03	RCHD Administration Section			70	58	58	N/A	N/A	58	Yes
	GF_N04	RCHD Administration Section			70	58	59	N/A	N/A	59	Yes
	GF_N05	RCHD Conference Room			70	59	59	N/A	N/A	59	Yes
1/F	1F_N01	RCHD Dormitory	+46.90	+48.1	70	50	50	N/A	N/A	50	Yes
	1F_N02	RCHD Dormitory			70	52	52	N/A	N/A	52	Yes
	1F_N03	RCHD Dormitory			70	54	54	N/A	N/A	54	Yes
	1F_N04	RCHD Dormitory			70	55	55	N/A	N/A	55	Yes
	1F_N05	RCHD Dormitory			70	56	56	N/A	N/A	56	Yes
	1F_N06	Nurse Station			70	56	56	N/A	N/A	56	Yes
	1F_N07	RCHD Dormitory			70	58	58	N/A	N/A	58	Yes
	1F_N08	RCHD Dormitory			70	58	58	N/A	N/A	58	Yes
	1F_N09	RCHD Dormitory			70	56	56	N/A	N/A	56	Yes
	1F_N10	Sick Bay with Negative Pressure			70	56	57	N/A	N/A	57	Yes
	1F_N11	RCHD Dormitory			70	50	50	N/A	N/A	50	Yes
	1F_N12	RCHD Dormitory			70	50	50	N/A	N/A	50	Yes
	1F_N13	RCHD Dormitory			70	50	50	N/A	N/A	50	Yes
	1F_N14	RCHD Dormitory			70	50	50	N/A	N/A	50	Yes
	1F_N15	RCHD Dormitory			70	**78**	**77**	Fixed Glazing	N/A	N/A	Yes
	1F_N16	RCHD Dormitory			70	**77**	**77**	Fixed Glazing	N/A	N/A	Yes
	1F_N17	RCHD Rehabilitation Area			70	**77**	**77**	Fixed Glazing	N/A	N/A	Yes
	1F_N18	RCHD Rehabilitation Area			70	**77**	**77**	Fixed Glazing	N/A	N/A	Yes
	1F_N19	RCHD Dining Room/ Multiprupose Room			70	56	56	N/A	N/A	56	Yes
2/F	2F_N01	RCHD Dormitory	+50.50	+51.7	70	51	51	N/A	N/A	51	Yes
	2F_N02	RCHD Dormitory			70	52	52	N/A	N/A	52	Yes
	2F_N03	RCHD Dormitory			70	55	55	N/A	N/A	55	Yes
	2F_N04	RCHD Dormitory			70	55	55	N/A	N/A	55	Yes
	2F_N05	RCHD Dormitory			70	56	56	N/A	N/A	56	Yes
	2F_N06	RCHD Dormitory			70	57	57	N/A	N/A	57	Yes
	2F_N07	RCHD Dormitory			70	58	58	N/A	N/A	58	Yes
	2F_N08	RCHD Dormitory			70	59	59	N/A	N/A	59	Yes
	2F_N09	RCHD Dormitory			70	57	57	N/A	N/A	57	Yes
	2F_N10	Sick Bay with Negative Pressure			70	57	57	N/A	N/A	57	Yes
	2F_N11	RCHD Rehabilitation Area			70	54	54	N/A	N/A	54	Yes
	2F_N12	RCHD Rehabilitation Area			70	54	54	N/A	N/A	54	Yes
	2F_N13	RCHD Rehabilitation Area			70	54	54	N/A	N/A	54	Yes
	2F_N14	RCHD Rehabilitation Area			70	**71**	**71**	Fixed Glazing	N/A	N/A	Yes
	2F_N15	RCHD Dining Room/ Multiprupose Room			70	**77**	**77**	Fixed Glazing	N/A	N/A	Yes
	2F_N16	RCHD Dining Room/ Multiprupose Room			70	**77**	**77**	Fixed Glazing	N/A	N/A	Yes
	2F_N17	RCHD Rehabilitation Area			70	**77**	**76**	Fixed Glazing	N/A	N/A	Yes
	2F_N18	Nurse Station			70	57	57	N/A	N/A	57	Yes
3/F	3F_N01	RCHD Dormitory	+54.10	+55.3	70	50	50	N/A	N/A	50	Yes
	3F_N02	RCHD Dormitory			70	52	52	N/A	N/A	52	Yes
	3F_N03	RCHD Dormitory			70	54	54	N/A	N/A	54	Yes
	3F_N04	RCHD Dormitory			70	55	55	N/A	N/A	55	Yes
	3F_N05	Sick Bay with Negative Pressure			70	56	56	N/A	N/A	56	Yes
	3F_N06	Nurse Station			70	56	56	N/A	N/A	56	Yes
	3F_N07	RCHD Dormitory			70	57	57	N/A	N/A	57	Yes
	3F_N08	RCHD Dormitory			70	58	58	N/A	N/A	58	Yes
	3F_N09	RCHD Dormitory			70	56	56	N/A	N/A	56	Yes
	3F_N10	RCHD Dormitory			70	56	56	N/A	N/A	56	Yes
	3F_N11	RCHD Dormitory			70	57	57	N/A	N/A	57	Yes
	3F_N12	RCHD Small Group Activity Room			70	58	58	N/A	N/A	58	Yes
	3F_N13	RCHD Small Group Activity Room			70	59	59	N/A	N/A	59	Yes
	3F_N14	RCHD Dormitory			70	64	64	N/A	N/A	64	Yes
	3F_N15	RCHD Dormitory			70	65	66	N/A	N/A	66	Yes
	3F_N16	RCHD Dormitory			70	67	68	N/A	N/A	68	Yes
	3F_N17	RCHD Dormitory			70	70	70	N/A	N/A	70	Yes
	3F_N18	RCHD Dormitory			70	**76**	**77**	Fixed Glazing	N/A	N/A	Yes
	3F_N19	RCHD Dormitory			70	**77**	**77**	Fixed Glazing	N/A	N/A	Yes
	3F_N20	RCHD Dormitory			70	**76**	**76**	Fixed Glazing	N/A	N/A	Yes
	3F_N21	RCHD Dormitory			70	**77**	**76**	Fixed Glazing	N/A	N/A	Yes
	3F_N22	RCHD Dormitory			70	**76**	**76**	Fixed Glazing	N/A	N/A	Yes
	3F_N23	RCHD Dining Room/ Multiprupose Room			70	**76**	**76**	Fixed Glazing	N/A	N/A	Yes
	3F_N24	RCHD Dining Room/ Multiprupose Room			70	57	56	N/A	N/A	56	Yes
4/F	4F_N01	RCHE Dormitory	+57.70	+58.9	70	45	45	N/A	N/A	45	Yes
	4F_N02	RCHE Dormitory			70	45	45	N/A	N/A	45	Yes
	4F_N03	RCHE Dormitory			70	45	45	N/A	N/A	45	Yes
	4F_N04	RCHE Dormitory			70	45	45	N/A	N/A	45	Yes
	4F_N05	RCHE Dormitory			70	45	45	N/A	N/A	45	Yes
	4F_N06	RCHD Small Group Activity Room			70	45	45	N/A	N/A	45	Yes
	4F_N07	RCHD Small Group Activity Room			70	57	58	N/A	N/A	58	Yes
	4F_N08	RCHE Dormitory			70	64	64	N/A	N/A	64	Yes
	4F_N09	RCHE Dormitory			70	65	65	N/A	N/A	65	Yes
	4F_N10	RCHE Dormitory			70	67	67	N/A	N/A	67	Yes
	4F_N11	RCHE Dormitory			70	69	70	N/A	N/A	70	Yes
	4F_N12	RCHE Dormitory			70	**76**	**76**	Fixed Glazing	N/A	N/A	Yes
	4F_N13	RCHE Dormitory			70	**76**	**76**	Fixed Glazing	N/A	N/A	Yes
	4F_N14	RCHE Dormitory			70	**76**	**76**	Fixed Glazing	N/A	N/A	Yes
	4F_N15	RCHE Dormitory			70	**76**	**76**	Fixed Glazing	N/A	N/A	Yes
	4F_N16	RCHE Dormitory			70	**76**	**76**	Fixed Glazing	N/A	N/A	Yes
	4F_N17	RCHE Dormitory			70	**76**	**76**	Fixed Glazing	N/A	N/A	Yes
	4F_N18	RCHE Dormitory			70	**76**	**76**	Fixed Glazing	N/A	N/A	Yes
	4F_N19	RCHE Dormitory			70	**76**	**76**	Fixed Glazing	N/A	N/A	Yes
	4F_N20	RCHD Dining Room/ Multiprupose Room			70	**76**	**75**	Fixed Glazing	N/A	N/A	Yes
	4F_N21	Nurse Station			70	56	56	N/A	N/A	56	Yes
5/F	5F_N01	Sick Bay with Negative Pressure	+61.30	+62.5	70	50	50	N/A	N/A	50	Yes
	5F_N02	RCHE Dormitory			70	46	45	N/A	N/A	45	Yes
	5F_N03	RCHE Dormitory			70	46	46	N/A	N/A	46	Yes
	5F_N04	RCHE Dormitory			70	46	46	N/A	N/A	46	Yes
	5F_N05	RCHE Dormitory			70	46	46	N/A	N/A	46	Yes
	5F_N06	RCHE Dormitory			70	46	46	N/A	N/A	46	Yes
	5F_N07	RCHE Dormitory			70	63	64	N/A	N/A	64	Yes
	5F_N08	RCHE Dormitory			70	65	65	N/A	N/A	65	Yes
	5F_N09	RCHE Dormitory			70	66	67	N/A	N/A	67	Yes
	5F_N10	RCHE Dormitory			70	69	69	N/A	N/A	69	Yes
	5F_N11	RCHE Dormitory			70	**75**	**75**	Fixed Glazing	N/A	N/A	Yes
	5F_N12	RCHE Dormitory			70	**76**	**76**	Fixed Glazing	N/A	N/A	Yes
	5F_N13	RCHE Dormitory			70	**76**	**76**	Fixed Glazing	N/A	N/A	Yes
	5F_N14	RCHE Dormitory			70	**76**	**76**	Fixed Glazing	N/A	N/A	Yes
	5F_N15	RCHE Dormitory			70	**75**	**75**	Fixed Glazing	N/A	N/A	Yes
	5F_N16	RCHE Dormitory			70	**75**	**75**	Fixed Glazing	N/A	N/A	Yes
	5F_N17	RCHE Dormitory			70	**75**	**75**	Fixed Glazing	N/A	N/A	Yes
	5F_N18	RCHE Dormitory			70	**75**	**75**	Fixed Glazing	N/A	N/A	Yes
	5F_N19	RCHD Dining Room/ Multiprupose Room			70	**75**	**75**	Fixed Glazing	N/A	N/A	Yes
	5F_N20	Nurse Station			70	56	56	N/A	N/A	56	Yes
	5F_N21	RCHE Dormitory			70	54	54	N/A	N/A	54	Yes

Predicted Road Traffic Noise Levels for 2045 (Mitigated Scenario)

Floor	NAP ID	Description	Floor Height, mPD	Assessment Height, mPD	Noise Criteria, dB(A)	Unmitigated Noise Level, $L_{10\ (1\ hour)}$, dB(A)		Proposed Noise Mitigation Measures	Estimated Noise Attenuation, dB(A)	Mitigated Noise Level, $L_{10\ (1\ hour)}$, dB(A)	Compliance
						AM	PM				
6/F	6F_N01	RCHE Dormitory	+64.90	+66.1	70	53	53	N/A	N/A	53	Yes
	6F_N02	RCHE Dormitory			70	50	50	N/A	N/A	50	Yes
	6F_N03	RCHE Dormitory			70	47	47	N/A	N/A	47	Yes
	6F_N04	RCHE Dormitory			70	47	47	N/A	N/A	47	Yes
	6F_N05	RCHE Dormitory			70	47	47	N/A	N/A	47	Yes
	6F_N06	RCHE Dormitory			70	47	47	N/A	N/A	47	Yes
	6F_N07	RCHE Dormitory			70	47	47	N/A	N/A	47	Yes
	6F_N08	RCHE Interview Room			70	58	58	N/A	N/A	58	Yes
	6F_N09	RCHE Dormitory			70	63	64	N/A	N/A	64	Yes
	6F_N10	RCHE Dormitory			70	64	65	N/A	N/A	65	Yes
	6F_N11	RCHE Dormitory			70	66	66	N/A	N/A	66	Yes
	6F_N12	RCHE Dormitory			70	**75**	**75**	Type 2	6	69	Yes
	6F_N13	RCHE Dormitory			70	**75**	**75**	Type 2	5	70	Yes
	6F_N14	RCHE Dormitory			70	**75**	**75**	Type 1	6	69	Yes
	6F_N15	RCHE Dormitory			70	**75**	**75**	Type 2	5	70	Yes
	6F_N16	RCHE Dormitory			70	**75**	**75**	Type 2	5	70	Yes
	6F_N17	RCHE Dormitory			70	**75**	**75**	Type 2	5	70	Yes
	6F_N18	RCHE Dormitory			70	**74**	**74**	Type 2	7	67	Yes
	6F_N19	RCHD Dining Room/ Multiprupose Room			70	57	56	N/A	N/A	56	Yes
	6F_N20	Nurse Station			70	56	56	N/A	N/A	56	Yes
7/F	7F_N01	Residential Clubhouse	+68.50	+69.7	70	45	45	N/A	N/A	45	Yes
	7F_N02	Residential Clubhouse			70	53	53	N/A	N/A	53	Yes
	7F_N03	Residential Clubhouse			70	52	52	N/A	N/A	52	Yes
	7F_N04	Residential Clubhouse			70	51	51	N/A	N/A	51	Yes
	7F_N05	Residential Clubhouse			70	46	46	N/A	N/A	46	Yes
	7F_N06	Residential Clubhouse			70	57	58	N/A	N/A	58	Yes
	7F_N07	Residential Clubhouse			70	59	59	N/A	N/A	59	Yes
	7F_N08	Residential Clubhouse			70	**74**	**74**	Fixed Glazing	N/A	N/A	Yes
	7F_N09	Residential Clubhouse			70	**74**	**73**	Fixed Glazing	N/A	N/A	Yes
	7F_N10	Residential Clubhouse			70	64	64	N/A	N/A	64	Yes
	7F_N11	Residential Clubhouse			70	56	56	N/A	N/A	56	Yes
8/F	8F_N01	Residential Clubhouse	+71.58	+72.8	70	47	47	N/A	N/A	47	Yes
	8F_N02	Residential Clubhouse			70	54	53	N/A	N/A	53	Yes
	8F_N03	Residential Clubhouse			70	53	53	N/A	N/A	53	Yes
	8F_N04	Residential Clubhouse			70	52	52	N/A	N/A	52	Yes
	8F_N05	Residential Clubhouse			70	51	51	N/A	N/A	51	Yes
	8F_N06	Residential Clubhouse			70	55	55	N/A	N/A	55	Yes
	8F_N07	Residential Clubhouse			70	61	61	N/A	N/A	61	Yes
	8F_N08	Residential Clubhouse			70	**72**	**72**	Fixed Glazing	N/A	N/A	Yes
	8F_N09	Residential Clubhouse			70	**74**	**74**	Fixed Glazing	N/A	N/A	Yes
	8F_N10	Residential Clubhouse			70	**73**	**73**	Fixed Glazing	N/A	N/A	Yes
	8F_N11	Residential Clubhouse			70	64	63	N/A	N/A	63	Yes
	8F_N12	Residential Clubhouse			70	56	56	N/A	N/A	56	Yes
	8F_N13	Residential Clubhouse			70	56	55	N/A	N/A	55	Yes
	8F_N14	Residential Clubhouse			70	55	54	N/A	N/A	54	Yes
	8F_N15	Residential Clubhouse			70	48	48	N/A	N/A	48	Yes
	8F_N16	Residential Clubhouse			70	57	58	N/A	N/A	58	Yes
	8F_N17	Residential Clubhouse			70	59	59	N/A	N/A	59	Yes
	8F_N18	Residential Clubhouse			70	57	57	N/A	N/A	57	Yes
	8F_N19	Residential Clubhouse			70	57	57	N/A	N/A	57	Yes
9/F	9F_N01	Flat - Bedroom	+74.65	+75.9	70	52	52	N/A	N/A	52	Yes
	9F_N02	Flat - Bedroom			70	52	52	N/A	N/A	52	Yes
	9F_N03	Flat - Living Room			70	52	51	N/A	N/A	51	Yes
	9F_N04	Flat - Bedroom			70	52	51	N/A	N/A	51	Yes
	9F_N05	Flat - Bedroom			70	51	51	N/A	N/A	51	Yes
	9F_N06	Flat - Bedroom			70	51	50	N/A	N/A	50	Yes
	9F_N07	Flat - Living Room			70	49	49	N/A	N/A	49	Yes
	9F_N08	Flat - Bedroom			70	49	49	N/A	N/A	49	Yes
	9F_N09	Flat - Living Room			70	49	49	N/A	N/A	49	Yes
	9F_N10	Flat - Bedroom			70	49	49	N/A	N/A	49	Yes
	9F_N11	Flat - Living Room			70	49	49	N/A	N/A	49	Yes
	9F_N12	Flat - Bedroom			70	47	46	N/A	N/A	46	Yes
	9F_N13	Flat - Bedroom			70	48	48	N/A	N/A	48	Yes
	9F_N14	Flat - Living Room			70	46	46	N/A	N/A	46	Yes
	9F_N15	Flat - Living Room			70	45	45	N/A	N/A	45	Yes
	9F_N16	Flat - Bedroom			70	45	45	N/A	N/A	45	Yes
	9F_N17	Flat - Living Room			70	57	57	N/A	N/A	57	Yes
	9F_N18	Flat - Living Room			70	58	59	N/A	N/A	59	Yes
	9F_N19	Flat - Living Room			70	62	62	N/A	N/A	62	Yes
	9F_N20	Flat - Bedroom			70	60	60	N/A	N/A	60	Yes
	9F_N21	Flat - Bedroom			70	59	59	N/A	N/A	59	Yes
	9F_N22	Flat - Living Room			70	58	58	N/A	N/A	58	Yes
	9F_N23	Flat - Bedroom			70	59	58	N/A	N/A	58	Yes
	9F_N24	Flat - Living Room			70	58	58	N/A	N/A	58	Yes
	9F_N25	Flat - Bedroom			70	58	58	N/A	N/A	58	Yes
	9F_N26	Flat - Bedroom			70	57	57	N/A	N/A	57	Yes
	9F_N27	Flat - Bedroom			70	57	57	N/A	N/A	57	Yes
	9F_N28	Flat - Living Room			70	57	57	N/A	N/A	57	Yes
	9F_N29	Flat - Bedroom			70	57	57	N/A	N/A	57	Yes
	9F_N30	Flat - Living Room			70	56	56	N/A	N/A	56	Yes
	9F_N31	Flat - Living Room			70	58	58	N/A	N/A	58	Yes
	9F_N32	Flat - Bedroom			70	60	60	N/A	N/A	60	Yes
	9F_N33	Flat - Living Room			70	68	68	N/A	N/A	68	Yes
	9F_N34	Flat - Bedroom			70	**73**	**73**	Type 1	4	69	Yes
	9F_N35	Flat - Bedroom			70	**73**	**73**	Type 1	5	68	Yes
	9F_N36	Flat - Bedroom			70	**73**	**73**	Type 1	5	68	Yes
	9F_N37	Flat - Living Room			70	**73**	**72**	Type 2	7	66	Yes
	9F_N38	Flat - Living Room			70	64	64	N/A	N/A	64	Yes
	9F_N39	Flat - Living Room			70	45	45	N/A	N/A	45	Yes

Predicted Road Traffic Noise Levels for 2045 (Mitigated Scenario)

Floor	NAP ID	Description	Floor Height, mPD	Assessment Height, mPD	Noise Criteria, dB(A)	Unmitigated Noise Level, $L_{10\ (1\ hour)}$, dB(A)		Proposed Noise Mitigation Measures	Estimated Noise Attenuation, dB(A)	Mitigated Noise Level, $L_{10\ (1\ hour)}$, dB(A)	Compliance
						AM	PM				
10/F	10F_N01	Flat - Bedroom	+77.73	+78.9	70	52	52	N/A	N/A	52	Yes
	10F_N02	Flat - Bedroom			70	52	52	N/A	N/A	52	Yes
	10F_N03	Flat - Living Room			70	52	52	N/A	N/A	52	Yes
	10F_N04	Flat - Bedroom			70	52	52	N/A	N/A	52	Yes
	10F_N05	Flat - Bedroom			70	51	51	N/A	N/A	51	Yes
	10F_N06	Flat - Bedroom			70	51	51	N/A	N/A	51	Yes
	10F_N07	Flat - Living Room			70	50	50	N/A	N/A	50	Yes
	10F_N08	Flat - Bedroom			70	49	49	N/A	N/A	49	Yes
	10F_N09	Flat - Living Room			70	49	49	N/A	N/A	49	Yes
	10F_N10	Flat - Bedroom			70	49	49	N/A	N/A	49	Yes
	10F_N11	Flat - Living Room			70	49	49	N/A	N/A	49	Yes
	10F_N12	Flat - Bedroom			70	47	47	N/A	N/A	47	Yes
	10F_N13	Flat - Bedroom			70	48	48	N/A	N/A	48	Yes
	10F_N14	Flat - Living Room			70	47	47	N/A	N/A	47	Yes
	10F_N15	Flat - Living Room			70	46	46	N/A	N/A	46	Yes
	10F_N16	Flat - Bedroom			70	46	46	N/A	N/A	46	Yes
	10F_N17	Flat - Living Room			70	57	57	N/A	N/A	57	Yes
	10F_N18	Flat - Living Room			70	58	59	N/A	N/A	59	Yes
	10F_N19	Flat - Living Room			70	62	62	N/A	N/A	62	Yes
	10F_N20	Flat - Bedroom			70	61	62	N/A	N/A	62	Yes
	10F_N21	Flat - Bedroom			70	60	60	N/A	N/A	60	Yes
	10F_N22	Flat - Living Room			70	59	59	N/A	N/A	59	Yes
	10F_N23	Flat - Bedroom			70	59	59	N/A	N/A	59	Yes
	10F_N24	Flat - Living Room			70	59	59	N/A	N/A	59	Yes
	10F_N25	Flat - Bedroom			70	59	59	N/A	N/A	59	Yes
	10F_N26	Flat - Bedroom			70	58	57	N/A	N/A	57	Yes
	10F_N27	Flat - Bedroom			70	58	58	N/A	N/A	58	Yes
	10F_N28	Flat - Living Room			70	58	58	N/A	N/A	58	Yes
	10F_N29	Flat - Bedroom			70	58	58	N/A	N/A	58	Yes
	10F_N30	Flat - Living Room			70	57	57	N/A	N/A	57	Yes
	10F_N31	Flat - Living Room			70	60	60	N/A	N/A	60	Yes
	10F_N32	Flat - Bedroom			70	61	61	N/A	N/A	61	Yes
	10F_N33	Flat - Living Room			70	70	69	N/A	N/A	69	Yes
	10F_N34	Flat - Bedroom			70	**73**	**73**	Type 1	4	69	Yes
	10F_N35	Flat - Bedroom			70	**73**	**73**	Type 1	5	68	Yes
	10F_N36	Flat - Bedroom			70	**73**	**72**	Type 1	5	68	Yes
	10F_N37	Flat - Living Room			70	**72**	**72**	Type 2	7	66	Yes
	10F_N38	Flat - Living Room			70	64	64	N/A	N/A	64	Yes
	10F_N39	Flat - Living Room			70	45	45	N/A	N/A	45	Yes
11/F	11F_N01	Flat - Bedroom	+80.80	+82.0	70	53	52	N/A	N/A	52	Yes
	11F_N02	Flat - Bedroom			70	53	52	N/A	N/A	52	Yes
	11F_N03	Flat - Living Room			70	52	52	N/A	N/A	52	Yes
	11F_N04	Flat - Bedroom			70	52	52	N/A	N/A	52	Yes
	11F_N05	Flat - Bedroom			70	52	52	N/A	N/A	52	Yes
	11F_N06	Flat - Bedroom			70	51	51	N/A	N/A	51	Yes
	11F_N07	Flat - Living Room			70	51	50	N/A	N/A	50	Yes
	11F_N08	Flat - Bedroom			70	50	50	N/A	N/A	50	Yes
	11F_N09	Flat - Living Room			70	50	50	N/A	N/A	50	Yes
	11F_N10	Flat - Bedroom			70	50	50	N/A	N/A	50	Yes
	11F_N11	Flat - Living Room			70	50	50	N/A	N/A	50	Yes
	11F_N12	Flat - Bedroom			70	49	49	N/A	N/A	49	Yes
	11F_N13	Flat - Bedroom			70	49	49	N/A	N/A	49	Yes
	11F_N14	Flat - Living Room			70	48	48	N/A	N/A	48	Yes
	11F_N15	Flat - Living Room			70	48	48	N/A	N/A	48	Yes
	11F_N16	Flat - Bedroom			70	48	48	N/A	N/A	48	Yes
	11F_N17	Flat - Living Room			70	57	57	N/A	N/A	57	Yes
	11F_N18	Flat - Living Room			70	59	59	N/A	N/A	59	Yes
	11F_N19	Flat - Living Room			70	62	62	N/A	N/A	62	Yes
	11F_N20	Flat - Bedroom			70	62	62	N/A	N/A	62	Yes
	11F_N21	Flat - Bedroom			70	62	62	N/A	N/A	62	Yes
	11F_N22	Flat - Living Room			70	60	59	N/A	N/A	59	Yes
	11F_N23	Flat - Bedroom			70	60	60	N/A	N/A	60	Yes
	11F_N24	Flat - Living Room			70	60	59	N/A	N/A	59	Yes
	11F_N25	Flat - Bedroom			70	59	59	N/A	N/A	59	Yes
	11F_N26	Flat - Bedroom			70	58	58	N/A	N/A	58	Yes
	11F_N27	Flat - Bedroom			70	59	59	N/A	N/A	59	Yes
	11F_N28	Flat - Living Room			70	59	59	N/A	N/A	59	Yes
	11F_N29	Flat - Bedroom			70	59	59	N/A	N/A	59	Yes
	11F_N30	Flat - Living Room			70	58	58	N/A	N/A	58	Yes
	11F_N31	Flat - Living Room			70	62	61	N/A	N/A	61	Yes
	11F_N32	Flat - Bedroom			70	63	63	N/A	N/A	63	Yes
	11F_N33	Flat - Living Room			70	70	70	N/A	N/A	70	Yes
	11F_N34	Flat - Bedroom			70	**73**	**73**	Type 1	4	68	Yes
	11F_N35	Flat - Bedroom			70	**73**	**73**	Type 1	5	67	Yes
	11F_N36	Flat - Bedroom			70	**72**	**72**	Type 1	5	68	Yes
	11F_N37	Flat - Living Room			70	**72**	**72**	Type 2	7	65	Yes
	11F_N38	Flat - Living Room			70	65	64	N/A	N/A	64	Yes
	11F_N39	Flat - Living Room			70	47	47	N/A	N/A	47	Yes
12/F	12F_N01	Flat - Bedroom	+83.88	+85.1	70	52	52	N/A	N/A	52	Yes
	12F_N02	Flat - Bedroom			70	52	52	N/A	N/A	52	Yes
	12F_N03	Flat - Living Room			70	52	51	N/A	N/A	51	Yes
	12F_N04	Flat - Bedroom			70	52	51	N/A	N/A	51	Yes
	12F_N05	Flat - Bedroom			70	51	51	N/A	N/A	51	Yes
	12F_N06	Flat - Bedroom			70	50	50	N/A	N/A	50	Yes
	12F_N07	Flat - Living Room			70	49	49	N/A	N/A	49	Yes
	12F_N08	Flat - Bedroom			70	49	49	N/A	N/A	49	Yes
	12F_N09	Flat - Living Room			70	49	49	N/A	N/A	49	Yes
	12F_N10	Flat - Bedroom			70	49	48	N/A	N/A	48	Yes
	12F_N11	Flat - Living Room			70	49	48	N/A	N/A	48	Yes
	12F_N12	Flat - Bedroom			70	46	46	N/A	N/A	46	Yes
	12F_N13	Flat - Bedroom			70	47	47	N/A	N/A	47	Yes
	12F_N14	Flat - Living Room			70	46	45	N/A	N/A	45	Yes
	12F_N15	Flat - Living Room			70	45	44	N/A	N/A	44	Yes
	12F_N16	Flat - Bedroom			70	45	44	N/A	N/A	44	Yes
	12F_N17	Flat - Living Room			70	57	57	N/A	N/A	57	Yes
	12F_N18	Flat - Living Room			70	58	59	N/A	N/A	59	Yes
	12F_N19	Flat - Living Room			70	61	61	N/A	N/A	61	Yes
	12F_N20	Flat - Bedroom			70	58	58	N/A	N/A	58	Yes
	12F_N21	Flat - Bedroom			70	58	58	N/A	N/A	58	Yes
	12F_N22	Flat - Living Room			70	57	57	N/A	N/A	57	Yes
	12F_N23	Flat - Bedroom			70	58	57	N/A	N/A	57	Yes
	12F_N24	Flat - Living Room			70	57	57	N/A	N/A	57	Yes
	12F_N25	Flat - Bedroom			70	57	57	N/A	N/A	57	Yes
	12F_N26	Flat - Bedroom			70	56	56	N/A	N/A	56	Yes
	12F_N27	Flat - Bedroom			70	56	56	N/A	N/A	56	Yes
	12F_N28	Flat - Living Room			70	56	56	N/A	N/A	56	Yes
	12F_N29	Flat - Bedroom			70	56	56	N/A	N/A	56	Yes
	12F_N30	Flat - Living Room			70	54	54	N/A	N/A	54	Yes
	12F_N31	Flat - Living Room			70	56	56	N/A	N/A	56	Yes
	12F_N32	Flat - Bedroom			70	58	58	N/A	N/A	58	Yes
	12F_N33	Flat - Living Room			70	65	65	N/A	N/A	65	Yes
	12F_N34	Flat - Bedroom			70	**74**	**73**	Type 1	4	69	Yes
	12F_N35	Flat - Bedroom			70	**74**	**73**	Type 1	5	68	Yes
	12F_N36	Flat - Bedroom			70	**73**	**73**	Type 1	5	68	Yes
	12F_N37	Flat - Living Room			70	**73**	**73**	Type 2	7	66	Yes
	12F_N38	Flat - Living Room			70	65	64	N/A	N/A	64	Yes
	12F_N39	Flat - Living Room			70	44	44	N/A	N/A	44	Yes

Predicted Road Traffic Noise Levels for 2045 (Mitigated Scenario)

Floor	NAP ID	Description	Floor Height, mPD	Assessment Height, mPD	Noise Criteria, dB(A)	Unmitigated Noise Level, $L_{10\ (1\ hour)}$, dB(A)		Proposed Noise Mitigation Measures	Estimated Noise Attenuation, dB(A)	Mitigated Noise Level, $L_{10\ (1\ hour)}$, dB(A)	Compliance
						AM	PM				
13/F	13F_N01	Flat - Bedroom	+86.95	+88.2	70	53	52	N/A	N/A	52	Yes
	13F_N02	Flat - Bedroom			70	52	52	N/A	N/A	52	Yes
	13F_N03	Flat - Living Room			70	52	52	N/A	N/A	52	Yes
	13F_N04	Flat - Bedroom			70	52	52	N/A	N/A	52	Yes
	13F_N05	Flat - Living Room			70	52	51	N/A	N/A	51	Yes
	13F_N06	Flat - Bedroom			70	51	51	N/A	N/A	51	Yes
	13F_N07	Flat - Bedroom			70	51	51	N/A	N/A	51	Yes
	13F_N08	Flat - Living Room			70	51	50	N/A	N/A	50	Yes
	13F_N09	Flat - Bedroom			70	50	50	N/A	N/A	50	Yes
	13F_N10	Flat - Living Room			70	50	50	N/A	N/A	50	Yes
	13F_N11	Flat - Bedroom			70	50	50	N/A	N/A	50	Yes
	13F_N12	Flat - Living Room			70	50	50	N/A	N/A	50	Yes
	13F_N13	Flat - Bedroom			70	49	49	N/A	N/A	49	Yes
	13F_N14	Flat - Bedroom			70	49	49	N/A	N/A	49	Yes
	13F_N15	Flat - Living Room			70	48	48	N/A	N/A	48	Yes
	13F_N16	Flat - Living Room			70	48	48	N/A	N/A	48	Yes
	13F_N17	Flat - Bedroom			70	48	48	N/A	N/A	48	Yes
	13F_N18	Flat - Living Room			70	60	60	N/A	N/A	60	Yes
	13F_N19	Flat - Living Room			70	62	62	N/A	N/A	62	Yes
	13F_N20	Flat - Living Room			70	69	69	N/A	N/A	69	Yes
	13F_N21	Flat - Bedroom			70	69	69	N/A	N/A	69	Yes
	13F_N22	Flat - Bedroom			70	69	69	N/A	N/A	69	Yes
	13F_N23	Flat - Living Room			70	68	68	N/A	N/A	68	Yes
	13F_N24	Flat - Bedroom			70	69	69	N/A	N/A	69	Yes
	13F_N25	Flat - Living Room			70	69	69	N/A	N/A	69	Yes
	13F_N26	Flat - Bedroom			70	69	69	N/A	N/A	69	Yes
	13F_N27	Flat - Bedroom			70	69	69	N/A	N/A	69	Yes
	13F_N28	Flat - Bedroom			70	69	69	N/A	N/A	69	Yes
	13F_N29	Flat - Living Room			70	69	69	N/A	N/A	69	Yes
	13F_N30	Flat - Bedroom			70	69	69	N/A	N/A	69	Yes
	13F_N31	Flat - Living Room			70	68	68	N/A	N/A	68	Yes
	13F_N32	Flat - Living Room			70	69	69	N/A	N/A	69	Yes
	13F_N33	Flat - Bedroom			70	69	69	N/A	N/A	69	Yes
	13F_N34	Flat - Living Room			70	70	70	N/A	N/A	70	Yes
	13F_N35	Flat - Bedroom			70	**73**	**72**	Type 1	4	68	Yes
	13F_N36	Flat - Bedroom			70	**73**	**72**	Type 1	5	67	Yes
	13F_N37	Flat - Bedroom			70	**72**	**72**	Type 1	5	67	Yes
	13F_N38	Flat - Living Room			70	**72**	**72**	Type 2	7	65	Yes
	13F_N39	Flat - Living Room			70	65	64	N/A	N/A	64	Yes
	13F_N40	Flat - Living Room			70	47	47	N/A	N/A	47	Yes
14/F	14F_N01	Flat - Bedroom	+90.03	+91.2	70	52	52	N/A	N/A	52	Yes
	14F_N02	Flat - Bedroom			70	52	52	N/A	N/A	52	Yes
	14F_N03	Flat - Living Room			70	52	52	N/A	N/A	52	Yes
	14F_N04	Flat - Bedroom			70	52	52	N/A	N/A	52	Yes
	14F_N05	Flat - Living Room			70	52	51	N/A	N/A	51	Yes
	14F_N06	Flat - Bedroom			70	51	51	N/A	N/A	51	Yes
	14F_N07	Flat - Bedroom			70	51	51	N/A	N/A	51	Yes
	14F_N08	Flat - Living Room			70	50	50	N/A	N/A	50	Yes
	14F_N09	Flat - Bedroom			70	50	50	N/A	N/A	50	Yes
	14F_N10	Flat - Living Room			70	50	50	N/A	N/A	50	Yes
	14F_N11	Flat - Bedroom			70	50	50	N/A	N/A	50	Yes
	14F_N12	Flat - Living Room			70	50	50	N/A	N/A	50	Yes
	14F_N13	Flat - Bedroom			70	49	49	N/A	N/A	49	Yes
	14F_N14	Flat - Living Room			70	49	49	N/A	N/A	49	Yes
	14F_N15	Flat - Bedroom			70	48	48	N/A	N/A	48	Yes
	14F_N16	Flat - Bedroom			70	48	48	N/A	N/A	48	Yes
	14F_N17	Flat - Living Room			70	48	48	N/A	N/A	48	Yes
	14F_N18	Flat - Bedroom			70	48	48	N/A	N/A	48	Yes
	14F_N19	Flat - Living Room			70	59	60	N/A	N/A	60	Yes
	14F_N20	Flat - Living Room			70	62	62	N/A	N/A	62	Yes
	14F_N21	Flat - Living Room			70	69	69	N/A	N/A	69	Yes
	14F_N22	Flat - Bedroom			70	69	69	N/A	N/A	69	Yes
	14F_N23	Flat - Bedroom			70	69	69	N/A	N/A	69	Yes
	14F_N24	Flat - Bedroom			70	68	68	N/A	N/A	68	Yes
	14F_N25	Flat - Bedroom			70	69	69	N/A	N/A	69	Yes
	14F_N26	Flat - Bedroom			70	69	69	N/A	N/A	69	Yes
	14F_N27	Flat - Living Room			70	69	69	N/A	N/A	69	Yes
	14F_N28	Flat - Bedroom			70	68	68	N/A	N/A	68	Yes
	14F_N29	Flat - Bedroom			70	69	69	N/A	N/A	69	Yes
	14F_N30	Flat - Living Room			70	69	69	N/A	N/A	69	Yes
	14F_N31	Flat - Bedroom			70	69	69	N/A	N/A	69	Yes
	14F_N32	Flat - Bedroom			70	69	69	N/A	N/A	69	Yes
	14F_N33	Flat - Living Room			70	68	68	N/A	N/A	68	Yes
	14F_N34	Flat - Living Room			70	69	69	N/A	N/A	69	Yes
	14F_N35	Flat - Bedroom			70	69	69	N/A	N/A	69	Yes
	14F_N36	Flat - Living Room			70	70	70	N/A	N/A	70	Yes
	14F_N37	Flat - Bedroom			70	**72**	**72**	Type 1	4	68	Yes
	14F_N38	Flat - Bedroom			70	**72**	**72**	Type 1	5	67	Yes
	14F_N39	Flat - Bedroom			70	**72**	**72**	Type 1	5	67	Yes
	14F_N40	Flat - Living Room			70	**72**	**72**	Type 2	7	65	Yes
	14F_N41	Flat - Living Room			70	65	64	N/A	N/A	64	Yes
	14F_N42	Flat - Living Room			70	47	47	N/A	N/A	47	Yes

Predicted Road Traffic Noise Levels for 2045 (Mitigated Scenario)

Floor	NAP ID	Description	Floor Height, mPD	Assessment Height, mPD	Noise Criteria, dB(A)	Unmitigated Noise Level, $L_{10\ (1\ hour)}$, dB(A)		Proposed Noise Mitigation Measures	Estimated Noise Attenuation, dB(A)	Mitigated Noise Level, $L_{10\ (1\ hour)}$, dB(A)	Compliance
						AM	PM				
15/F	15F_N01	Flat - Bedroom	+93.10	+94.3	70	52	52	N/A	N/A	52	Yes
	15F_N02	Flat - Bedroom			70	52	52	N/A	N/A	52	Yes
	15F_N03	Flat - Living Room			70	52	52	N/A	N/A	52	Yes
	15F_N04	Flat - Bedroom			70	52	52	N/A	N/A	52	Yes
	15F_N05	Flat - Living Room			70	51	51	N/A	N/A	51	Yes
	15F_N06	Flat - Bedroom			70	51	51	N/A	N/A	51	Yes
	15F_N07	Flat - Bedroom			70	51	50	N/A	N/A	50	Yes
	15F_N08	Flat - Living Room			70	50	50	N/A	N/A	50	Yes
	15F_N09	Flat - Bedroom			70	50	50	N/A	N/A	50	Yes
	15F_N10	Flat - Living Room			70	50	50	N/A	N/A	50	Yes
	15F_N11	Flat - Bedroom			70	50	50	N/A	N/A	50	Yes
	15F_N12	Flat - Living Room			70	50	50	N/A	N/A	50	Yes
	15F_N13	Flat - Bedroom			70	49	49	N/A	N/A	49	Yes
	15F_N14	Flat - Living Room			70	50	49	N/A	N/A	49	Yes
	15F_N15	Flat - Bedroom			70	48	48	N/A	N/A	48	Yes
	15F_N16	Flat - Bedroom			70	48	48	N/A	N/A	48	Yes
	15F_N17	Flat - Living Room			70	49	49	N/A	N/A	49	Yes
	15F_N18	Flat - Bedroom			70	49	49	N/A	N/A	49	Yes
	15F_N19	Flat - Living Room			70	59	60	N/A	N/A	60	Yes
	15F_N20	Flat - Living Room			70	62	62	N/A	N/A	62	Yes
	15F_N21	Flat - Living Room			70	69	69	N/A	N/A	69	Yes
	15F_N22	Flat - Bedroom			70	69	69	N/A	N/A	69	Yes
	15F_N23	Flat - Bedroom			70	69	69	N/A	N/A	69	Yes
	15F_N24	Flat - Bedroom			70	67	67	N/A	N/A	67	Yes
	15F_N25	Flat - Bedroom			70	69	69	N/A	N/A	69	Yes
	15F_N26	Flat - Bedroom			70	69	69	N/A	N/A	69	Yes
	15F_N27	Flat - Living Room			70	69	69	N/A	N/A	69	Yes
	15F_N28	Flat - Bedroom			70	68	68	N/A	N/A	68	Yes
	15F_N29	Flat - Bedroom			70	69	69	N/A	N/A	69	Yes
	15F_N30	Flat - Living Room			70	69	69	N/A	N/A	69	Yes
	15F_N31	Flat - Bedroom			70	69	69	N/A	N/A	69	Yes
	15F_N32	Flat - Bedroom			70	69	69	N/A	N/A	69	Yes
	15F_N33	Flat - Living Room			70	68	68	N/A	N/A	68	Yes
	15F_N34	Flat - Living Room			70	69	69	N/A	N/A	69	Yes
	15F_N35	Flat - Bedroom			70	69	69	N/A	N/A	69	Yes
	15F_N36	Flat - Bedroom			70	70	70	N/A	N/A	70	Yes
	15F_N37	Flat - Living Room			70	70	70	N/A	N/A	70	Yes
	15F_N38	Flat - Living Room			70	62	62	N/A	N/A	62	Yes
	15F_N39	Flat - Bedroom			70	**72**	**72**	Type 1	5	67	Yes
	15F_N40	Flat - Living Room			70	**72**	**72**	Type 2	7	65	Yes
	15F_N41	Flat - Living Room			70	65	64	N/A	N/A	64	Yes
	15F_N42	Flat - Living Room			70	47	47	N/A	N/A	47	Yes
16/F	16F_N01	Flat - Bedroom	+96.18	+97.4	70	52	52	N/A	N/A	52	Yes
	16F_N02	Flat - Bedroom			70	52	51	N/A	N/A	51	Yes
	16F_N03	Flat - Living Room			70	51	51	N/A	N/A	51	Yes
	16F_N04	Flat - Bedroom			70	51	51	N/A	N/A	51	Yes
	16F_N05	Flat - Living Room			70	50	50	N/A	N/A	50	Yes
	16F_N06	Flat - Bedroom			70	50	50	N/A	N/A	50	Yes
	16F_N07	Flat - Bedroom			70	49	49	N/A	N/A	49	Yes
	16F_N08	Flat - Living Room			70	49	49	N/A	N/A	49	Yes
	16F_N09	Flat - Bedroom			70	49	48	N/A	N/A	48	Yes
	16F_N10	Flat - Living Room			70	49	48	N/A	N/A	48	Yes
	16F_N11	Flat - Bedroom			70	48	48	N/A	N/A	48	Yes
	16F_N12	Flat - Living Room			70	49	48	N/A	N/A	48	Yes
	16F_N13	Flat - Bedroom			70	47	47	N/A	N/A	47	Yes
	16F_N14	Flat - Living Room			70	48	48	N/A	N/A	48	Yes
	16F_N15	Flat - Bedroom			70	46	46	N/A	N/A	46	Yes
	16F_N16	Flat - Bedroom			70	46	46	N/A	N/A	46	Yes
	16F_N17	Flat - Living Room			70	50	49	N/A	N/A	49	Yes
	16F_N18	Flat - Bedroom			70	68	68	N/A	N/A	68	Yes
	16F_N19	Flat - Bedroom			70	69	69	N/A	N/A	69	Yes
	16F_N20	Flat - Living Room			70	69	69	N/A	N/A	69	Yes
	16F_N21	Flat - Bedroom			70	69	69	N/A	N/A	69	Yes
	16F_N22	Flat - Bedroom			70	68	68	N/A	N/A	68	Yes
	16F_N23	Flat - Living Room			70	69	69	N/A	N/A	69	Yes
	16F_N24	Flat - Bedroom			70	69	69	N/A	N/A	69	Yes
	16F_N25	Flat - Bedroom			70	68	68	N/A	N/A	68	Yes
	16F_N26	Flat - Bedroom			70	69	69	N/A	N/A	69	Yes
	16F_N27	Flat - Living Room			70	69	69	N/A	N/A	69	Yes
	16F_N28	Flat - Bedroom			70	69	69	N/A	N/A	69	Yes
	16F_N29	Flat - Bedroom			70	68	68	N/A	N/A	68	Yes
	16F_N30	Flat - Living Room			70	68	68	N/A	N/A	68	Yes
	16F_N31	Flat - Living Room			70	68	68	N/A	N/A	68	Yes
	16F_N32	Flat - Bedroom			70	69	69	N/A	N/A	69	Yes
	16F_N33	Flat - Bedroom			70	69	69	N/A	N/A	69	Yes
	16F_N34	Flat - Living Room			70	70	70	N/A	N/A	70	Yes
	16F_N35	Flat - Living Room			70	67	67	N/A	N/A	67	Yes
	16F_N36	Flat - Bedroom			70	**72**	**72**	Type 1	5	67	Yes
	16F_N37	Flat - Living Room			70	**72**	**71**	Type 2	7	65	Yes
	16F_N38	Flat - Living Room			70	65	64	N/A	N/A	64	Yes
	16F_N39	Flat - Living Room			70	46	46	N/A	N/A	46	Yes

Predicted Road Traffic Noise Levels for 2045 (Mitigated Scenario)

Floor	NAP ID	Description	Floor Height, mPD	Assessment Height, mPD	Noise Criteria, dB(A)	Unmitigated Noise Level, $L_{10\ (1\ hour)}$, dB(A)		Proposed Noise Mitigation Measures	Estimated Noise Attenuation, dB(A)	Mitigated Noise Level, $L_{10\ (1\ hour)}$, dB(A)	Compliance
						AM	PM				
17/F	17F_N01	Flat - Bedroom	+99.25	+100.5	70	52	52	N/A	N/A	52	Yes
	17F_N02	Flat - Bedroom			70	52	52	N/A	N/A	52	Yes
	17F_N03	Flat - Living Room			70	51	51	N/A	N/A	51	Yes
	17F_N04	Flat - Bedroom			70	51	51	N/A	N/A	51	Yes
	17F_N05	Flat - Living Room			70	51	51	N/A	N/A	51	Yes
	17F_N06	Flat - Bedroom			70	50	50	N/A	N/A	50	Yes
	17F_N07	Flat - Bedroom			70	50	50	N/A	N/A	50	Yes
	17F_N08	Flat - Living Room			70	49	49	N/A	N/A	49	Yes
	17F_N09	Flat - Bedroom			70	49	49	N/A	N/A	49	Yes
	17F_N10	Flat - Living Room			70	49	49	N/A	N/A	49	Yes
	17F_N11	Flat - Bedroom			70	49	49	N/A	N/A	49	Yes
	17F_N12	Flat - Living Room			70	49	49	N/A	N/A	49	Yes
	17F_N13	Flat - Bedroom			70	48	48	N/A	N/A	48	Yes
	17F_N14	Flat - Living Room			70	49	49	N/A	N/A	49	Yes
	17F_N15	Flat - Bedroom			70	48	47	N/A	N/A	47	Yes
	17F_N16	Flat - Bedroom			70	48	47	N/A	N/A	47	Yes
	17F_N17	Flat - Living Room			70	52	51	N/A	N/A	51	Yes
	17F_N18	Flat - Bedroom			70	68	68	N/A	N/A	68	Yes
	17F_N19	Flat - Bedroom			70	69	69	N/A	N/A	69	Yes
	17F_N20	Flat - Living Room			70	69	69	N/A	N/A	69	Yes
	17F_N21	Flat - Bedroom			70	68	68	N/A	N/A	68	Yes
	17F_N22	Flat - Bedroom			70	68	68	N/A	N/A	68	Yes
	17F_N23	Flat - Living Room			70	69	69	N/A	N/A	69	Yes
	17F_N24	Flat - Bedroom			70	69	69	N/A	N/A	69	Yes
	17F_N25	Flat - Bedroom			70	68	68	N/A	N/A	68	Yes
	17F_N26	Flat - Bedroom			70	69	69	N/A	N/A	69	Yes
	17F_N27	Flat - Living Room			70	69	69	N/A	N/A	69	Yes
	17F_N28	Flat - Bedroom			70	68	68	N/A	N/A	68	Yes
	17F_N29	Flat - Bedroom			70	68	68	N/A	N/A	68	Yes
	17F_N30	Flat - Living Room			70	68	68	N/A	N/A	68	Yes
	17F_N31	Flat - Living Room			70	68	68	N/A	N/A	68	Yes
	17F_N32	Flat - Bedroom			70	68	68	N/A	N/A	68	Yes
	17F_N33	Flat - Bedroom			70	69	69	N/A	N/A	69	Yes
	17F_N34	Flat - Living Room			70	70	70	N/A	N/A	70	Yes
	17F_N35	Flat - Living Room			70	70	69	N/A	N/A	69	Yes
	17F_N36	Flat - Bedroom			70	**72**	**71**	Type 1	5	67	Yes
	17F_N37	Flat - Living Room			70	**72**	**71**	Type 2	7	65	Yes
	17F_N38	Flat - Living Room			70	65	64	N/A	N/A	64	Yes
	17F_N39	Flat - Living Room			70	47	48	N/A	N/A	48	Yes
18/F	18F_N01	Flat - Bedroom	+102.33	+103.5	70	52	52	N/A	N/A	52	Yes
	18F_N02	Flat - Bedroom			70	52	52	N/A	N/A	52	Yes
	18F_N03	Flat - Living Room			70	52	52	N/A	N/A	52	Yes
	18F_N04	Flat - Bedroom			70	52	51	N/A	N/A	51	Yes
	18F_N05	Flat - Living Room			70	51	51	N/A	N/A	51	Yes
	18F_N06	Flat - Bedroom			70	51	51	N/A	N/A	51	Yes
	18F_N07	Flat - Bedroom			70	51	50	N/A	N/A	50	Yes
	18F_N08	Flat - Living Room			70	50	50	N/A	N/A	50	Yes
	18F_N09	Flat - Bedroom			70	50	50	N/A	N/A	50	Yes
	18F_N10	Flat - Living Room			70	50	50	N/A	N/A	50	Yes
	18F_N11	Flat - Bedroom			70	50	50	N/A	N/A	50	Yes
	18F_N12	Flat - Living Room			70	50	50	N/A	N/A	50	Yes
	18F_N13	Flat - Bedroom			70	49	49	N/A	N/A	49	Yes
	18F_N14	Flat - Living Room			70	50	50	N/A	N/A	50	Yes
	18F_N15	Flat - Bedroom			70	49	49	N/A	N/A	49	Yes
	18F_N16	Flat - Bedroom			70	49	49	N/A	N/A	49	Yes
	18F_N17	Flat - Living Room			70	53	53	N/A	N/A	53	Yes
	18F_N18	Flat - Bedroom			70	68	68	N/A	N/A	68	Yes
	18F_N19	Flat - Bedroom			70	68	68	N/A	N/A	68	Yes
	18F_N20	Flat - Living Room			70	69	69	N/A	N/A	69	Yes
	18F_N21	Flat - Bedroom			70	68	68	N/A	N/A	68	Yes
	18F_N22	Flat - Bedroom			70	68	68	N/A	N/A	68	Yes
	18F_N23	Flat - Living Room			70	69	69	N/A	N/A	69	Yes
	18F_N24	Flat - Bedroom			70	69	69	N/A	N/A	69	Yes
	18F_N25	Flat - Bedroom			70	68	68	N/A	N/A	68	Yes
	18F_N26	Flat - Bedroom			70	69	69	N/A	N/A	69	Yes
	18F_N27	Flat - Living Room			70	68	68	N/A	N/A	68	Yes
	18F_N28	Flat - Bedroom			70	68	68	N/A	N/A	68	Yes
	18F_N29	Flat - Bedroom			70	68	68	N/A	N/A	68	Yes
	18F_N30	Flat - Living Room			70	68	68	N/A	N/A	68	Yes
	18F_N31	Flat - Living Room			70	68	68	N/A	N/A	68	Yes
	18F_N32	Flat - Bedroom			70	68	68	N/A	N/A	68	Yes
	18F_N33	Flat - Bedroom			70	69	69	N/A	N/A	69	Yes
	18F_N34	Flat - Living Room			70	69	69	N/A	N/A	69	Yes
	18F_N35	Flat - Living Room			70	70	70	N/A	N/A	70	Yes
	18F_N36	Flat - Bedroom			70	**72**	**71**	Type 1	5	67	Yes
	18F_N37	Flat - Living Room			70	**71**	**71**	Type 2	7	65	Yes
	18F_N38	Flat - Living Room			70	65	65	N/A	N/A	65	Yes
	18F_N39	Flat - Living Room			70	49	50	N/A	N/A	50	Yes
19/F	19F_N01	Flat - Bedroom	+105.40	+106.6	70	52	52	N/A	N/A	52	Yes
	19F_N02	Flat - Bedroom			70	52	51	N/A	N/A	51	Yes
	19F_N03	Flat - Living Room			70	51	51	N/A	N/A	51	Yes
	19F_N04	Flat - Bedroom			70	51	51	N/A	N/A	51	Yes
	19F_N05	Flat - Living Room			70	51	50	N/A	N/A	50	Yes
	19F_N06	Flat - Bedroom			70	50	50	N/A	N/A	50	Yes
	19F_N07	Flat - Bedroom			70	50	50	N/A	N/A	50	Yes
	19F_N08	Flat - Living Room			70	50	49	N/A	N/A	49	Yes
	19F_N09	Flat - Bedroom			70	49	49	N/A	N/A	49	Yes
	19F_N10	Flat - Living Room			70	49	49	N/A	N/A	49	Yes
	19F_N11	Flat - Bedroom			70	50	50	N/A	N/A	50	Yes
	19F_N12	Flat - Living Room			70	50	50	N/A	N/A	50	Yes
	19F_N13	Flat - Bedroom			70	50	49	N/A	N/A	49	Yes
	19F_N14	Flat - Living Room			70	51	50	N/A	N/A	50	Yes
	19F_N15	Flat - Bedroom			70	50	49	N/A	N/A	49	Yes
	19F_N16	Flat - Bedroom			70	50	50	N/A	N/A	50	Yes
	19F_N17	Flat - Living Room			70	53	53	N/A	N/A	53	Yes
	19F_N18	Flat - Bedroom			70	68	68	N/A	N/A	68	Yes
	19F_N19	Flat - Bedroom			70	68	68	N/A	N/A	68	Yes
	19F_N20	Flat - Living Room			70	68	68	N/A	N/A	68	Yes
	19F_N21	Flat - Bedroom			70	68	68	N/A	N/A	68	Yes
	19F_N22	Flat - Bedroom			70	68	68	N/A	N/A	68	Yes
	19F_N23	Flat - Living Room			70	68	68	N/A	N/A	68	Yes
	19F_N24	Flat - Bedroom			70	68	68	N/A	N/A	68	Yes
	19F_N25	Flat - Bedroom			70	68	68	N/A	N/A	68	Yes
	19F_N26	Flat - Bedroom			70	68	68	N/A	N/A	68	Yes
	19F_N27	Flat - Living Room			70	68	68	N/A	N/A	68	Yes
	19F_N28	Flat - Bedroom			70	68	68	N/A	N/A	68	Yes
	19F_N29	Flat - Living Room			70	68	68	N/A	N/A	68	Yes
	19F_N30	Flat - Living Room			70	68	68	N/A	N/A	68	Yes
	19F_N31	Flat - Bedroom			70	68	68	N/A	N/A	68	Yes
	19F_N32	Flat - Bedroom			70	68	68	N/A	N/A	68	Yes
	19F_N33	Flat - Bedroom			70	69	69	N/A	N/A	69	Yes
	19F_N34	Flat - Living Room			70	69	69	N/A	N/A	69	Yes
	19F_N35	Flat - Living Room			70	70	70	N/A	N/A	70	Yes
	19F_N36	Flat - Bedroom			70	**71**	**71**	Type 1	5	67	Yes
	19F_N37	Flat - Living Room			70	**71**	**71**	Type 2	7	65	Yes
	19F_N38	Flat - Living Room			70	65	65	N/A	N/A	65	Yes
	19F_N39	Flat - Living Room			70	49	50	N/A	N/A	50	Yes

Predicted Road Traffic Noise Levels for 2045 (Mitigated Scenario)

Floor	NAP ID	Description	Floor Height, mPD	Assessment Height, mPD	Noise Criteria, dB(A)	Unmitigated Noise Level, $L_{10\ (1\ hour)}$, dB(A)		Proposed Noise Mitigation Measures	Estimated Noise Attenuation, dB(A)	Mitigated Noise Level, $L_{10\ (1\ hour)}$, dB(A)	Compliance
						AM	PM				
20/F	20F_N01	Flat - Bedroom	+108.48	+109.7	70	52	52	N/A	N/A	52	Yes
	20F_N02	Flat - Bedroom			70	52	52	N/A	N/A	52	Yes
	20F_N03	Flat - Living Room			70	52	52	N/A	N/A	52	Yes
	20F_N04	Flat - Bedroom			70	52	52	N/A	N/A	52	Yes
	20F_N05	Flat - Living Room			70	52	51	N/A	N/A	51	Yes
	20F_N06	Flat - Bedroom			70	52	51	N/A	N/A	51	Yes
	20F_N07	Flat - Bedroom			70	51	51	N/A	N/A	51	Yes
	20F_N08	Flat - Living Room			70	51	51	N/A	N/A	51	Yes
	20F_N09	Flat - Bedroom			70	51	50	N/A	N/A	50	Yes
	20F_N10	Flat - Living Room			70	51	50	N/A	N/A	50	Yes
	20F_N11	Flat - Bedroom			70	51	51	N/A	N/A	51	Yes
	20F_N12	Flat - Living Room			70	52	52	N/A	N/A	52	Yes
	20F_N13	Flat - Bedroom			70	52	51	N/A	N/A	51	Yes
	20F_N14	Flat - Living Room			70	52	52	N/A	N/A	52	Yes
	20F_N15	Flat - Bedroom			70	52	51	N/A	N/A	51	Yes
	20F_N16	Flat - Bedroom			70	52	51	N/A	N/A	51	Yes
	20F_N17	Flat - Living Room			70	54	54	N/A	N/A	54	Yes
	20F_N18	Flat - Bedroom			70	68	68	N/A	N/A	68	Yes
	20F_N19	Flat - Bedroom			70	68	68	N/A	N/A	68	Yes
	20F_N20	Flat - Living Room			70	68	68	N/A	N/A	68	Yes
	20F_N21	Flat - Bedroom			70	68	68	N/A	N/A	68	Yes
	20F_N22	Flat - Bedroom			70	68	68	N/A	N/A	68	Yes
	20F_N23	Flat - Living Room			70	68	68	N/A	N/A	68	Yes
	20F_N24	Flat - Bedroom			70	68	68	N/A	N/A	68	Yes
	20F_N25	Flat - Bedroom			70	67	67	N/A	N/A	67	Yes
	20F_N26	Flat - Bedroom			70	68	68	N/A	N/A	68	Yes
	20F_N27	Flat - Living Room			70	68	68	N/A	N/A	68	Yes
	20F_N28	Flat - Bedroom			70	68	68	N/A	N/A	68	Yes
	20F_N29	Flat - Living Room			70	68	68	N/A	N/A	68	Yes
	20F_N30	Flat - Living Room			70	68	68	N/A	N/A	68	Yes
	20F_N31	Flat - Bedroom			70	68	68	N/A	N/A	68	Yes
	20F_N32	Flat - Bedroom			70	68	68	N/A	N/A	68	Yes
	20F_N33	Flat - Bedroom			70	69	69	N/A	N/A	69	Yes
	20F_N34	Flat - Living Room			70	69	69	N/A	N/A	69	Yes
	20F_N35	Flat - Living Room			70	70	70	N/A	N/A	70	Yes
	20F_N36	Flat - Bedroom			70	**71**	**71**	Type 1	5	66	Yes
	20F_N37	Flat - Living Room			70	**71**	**71**	Type 2	7	64	Yes
	20F_N38	Flat - Living Room			70	66	65	N/A	N/A	65	Yes
	20F_N39	Flat - Living Room			70	51	51	N/A	N/A	51	Yes
21/F	21F_N01	Flat - Bedroom	+111.55	+112.8	70	52	51	N/A	N/A	51	Yes
	21F_N02	Flat - Bedroom			70	51	51	N/A	N/A	51	Yes
	21F_N03	Flat - Living Room			70	51	51	N/A	N/A	51	Yes
	21F_N04	Flat - Bedroom			70	51	51	N/A	N/A	51	Yes
	21F_N05	Flat - Living Room			70	50	50	N/A	N/A	50	Yes
	21F_N06	Flat - Bedroom			70	50	50	N/A	N/A	50	Yes
	21F_N07	Flat - Bedroom			70	50	50	N/A	N/A	50	Yes
	21F_N08	Flat - Living Room			70	49	49	N/A	N/A	49	Yes
	21F_N09	Flat - Bedroom			70	49	49	N/A	N/A	49	Yes
	21F_N10	Flat - Living Room			70	49	49	N/A	N/A	49	Yes
	21F_N11	Flat - Bedroom			70	50	50	N/A	N/A	50	Yes
	21F_N12	Flat - Living Room			70	51	51	N/A	N/A	51	Yes
	21F_N13	Flat - Bedroom			70	51	51	N/A	N/A	51	Yes
	21F_N14	Flat - Living Room			70	52	51	N/A	N/A	51	Yes
	21F_N15	Flat - Bedroom			70	51	51	N/A	N/A	51	Yes
	21F_N16	Flat - Bedroom			70	52	51	N/A	N/A	51	Yes
	21F_N17	Flat - Living Room			70	54	53	N/A	N/A	53	Yes
	21F_N18	Flat - Bedroom			70	68	68	N/A	N/A	68	Yes
	21F_N19	Flat - Bedroom			70	68	68	N/A	N/A	68	Yes
	21F_N20	Flat - Living Room			70	68	68	N/A	N/A	68	Yes
	21F_N21	Flat - Bedroom			70	68	68	N/A	N/A	68	Yes
	21F_N22	Flat - Bedroom			70	67	68	N/A	N/A	68	Yes
	21F_N23	Flat - Living Room			70	68	68	N/A	N/A	68	Yes
	21F_N24	Flat - Bedroom			70	68	68	N/A	N/A	68	Yes
	21F_N25	Flat - Living Room			70	67	67	N/A	N/A	67	Yes
	21F_N26	Flat - Bedroom			70	68	68	N/A	N/A	68	Yes
	21F_N27	Flat - Bedroom			70	66	66	N/A	N/A	66	Yes
	21F_N28	Flat - Bedroom			70	68	68	N/A	N/A	68	Yes
	21F_N29	Flat - Living Room			70	68	68	N/A	N/A	68	Yes
	21F_N30	Flat - Living Room			70	67	68	N/A	N/A	68	Yes
	21F_N31	Flat - Bedroom			70	68	68	N/A	N/A	68	Yes
	21F_N32	Flat - Bedroom			70	68	68	N/A	N/A	68	Yes
	21F_N33	Flat - Bedroom			70	69	69	N/A	N/A	69	Yes
	21F_N34	Flat - Living Room			70	69	69	N/A	N/A	69	Yes
	21F_N35	Flat - Living Room			70	70	70	N/A	N/A	70	Yes
	21F_N36	Flat - Bedroom			70	**71**	**71**	Type 1	5	66	Yes
	21F_N37	Flat - Living Room			70	**71**	**71**	Type 2	7	64	Yes
	21F_N38	Flat - Living Room			70	66	65	N/A	N/A	65	Yes
	21F_N39	Flat - Living Room			70	50	50	N/A	N/A	50	Yes
22/F	22F_N01	Flat - Bedroom	+114.63	+115.8	70	52	52	N/A	N/A	52	Yes
	22F_N02	Flat - Bedroom			70	52	52	N/A	N/A	52	Yes
	22F_N03	Flat - Living Room			70	52	51	N/A	N/A	51	Yes
	22F_N04	Flat - Bedroom			70	52	51	N/A	N/A	51	Yes
	22F_N05	Flat - Living Room			70	51	51	N/A	N/A	51	Yes
	22F_N06	Flat - Bedroom			70	51	51	N/A	N/A	51	Yes
	22F_N07	Flat - Bedroom			70	51	51	N/A	N/A	51	Yes
	22F_N08	Flat - Living Room			70	51	50	N/A	N/A	50	Yes
	22F_N09	Flat - Bedroom			70	50	50	N/A	N/A	50	Yes
	22F_N10	Flat - Living Room			70	51	50	N/A	N/A	50	Yes
	22F_N11	Flat - Bedroom			70	51	51	N/A	N/A	51	Yes
	22F_N12	Flat - Living Room			70	52	52	N/A	N/A	52	Yes
	22F_N13	Flat - Bedroom			70	52	52	N/A	N/A	52	Yes
	22F_N14	Flat - Living Room			70	53	52	N/A	N/A	52	Yes
	22F_N15	Flat - Bedroom			70	52	52	N/A	N/A	52	Yes
	22F_N16	Flat - Bedroom			70	52	52	N/A	N/A	52	Yes
	22F_N17	Flat - Living Room			70	54	54	N/A	N/A	54	Yes
	22F_N18	Flat - Bedroom			70	68	68	N/A	N/A	68	Yes
	22F_N19	Flat - Bedroom			70	68	68	N/A	N/A	68	Yes
	22F_N20	Flat - Living Room			70	68	68	N/A	N/A	68	Yes
	22F_N21	Flat - Bedroom			70	68	68	N/A	N/A	68	Yes
	22F_N22	Flat - Bedroom			70	67	67	N/A	N/A	67	Yes
	22F_N23	Flat - Living Room			70	68	68	N/A	N/A	68	Yes
	22F_N24	Flat - Bedroom			70	68	68	N/A	N/A	68	Yes
	22F_N25	Flat - Living Room			70	67	67	N/A	N/A	67	Yes
	22F_N26	Flat - Bedroom			70	68	68	N/A	N/A	68	Yes
	22F_N27	Flat - Bedroom			70	66	66	N/A	N/A	66	Yes
	22F_N28	Flat - Bedroom			70	68	68	N/A	N/A	68	Yes
	22F_N29	Flat - Living Room			70	68	68	N/A	N/A	68	Yes
	22F_N30	Flat - Living Room			70	67	67	N/A	N/A	67	Yes
	22F_N31	Flat - Bedroom			70	68	68	N/A	N/A	68	Yes
	22F_N32	Flat - Bedroom			70	68	68	N/A	N/A	68	Yes
	22F_N33	Flat - Bedroom			70	68	68	N/A	N/A	68	Yes
	22F_N34	Flat - Living Room			70	69	69	N/A	N/A	69	Yes
	22F_N35	Flat - Living Room			70	70	70	N/A	N/A	70	Yes
	22F_N36	Flat - Bedroom			70	**71**	**71**	Type 1	5	66	Yes
	22F_N37	Flat - Living Room			70	**71**	**71**	Type 2	7	64	Yes
	22F_N38	Flat - Living Room			70	66	66	N/A	N/A	66	Yes
	22F_N39	Flat - Living Room			70	51	51	N/A	N/A	51	Yes

Predicted Road Traffic Noise Levels for 2045 (Mitigated Scenario)

Floor	NAP ID	Description	Floor Height, mPD	Assessment Height, mPD	Noise Criteria, dB(A)	Unmitigated Noise Level, $L_{10\ (1\ hour)}$, dB(A)		Proposed Noise Mitigation Measures	Estimated Noise Attenuation, dB(A)	Mitigated Noise Level, $L_{10\ (1\ hour)}$, dB(A)	Compliance
						AM	PM				
23/F	23F_N01	Flat - Bedroom	+117.70	+118.9	70	52	52	N/A	N/A	52	Yes
	23F_N02	Flat - Bedroom			70	52	52	N/A	N/A	52	Yes
	23F_N03	Flat - Living Room			70	52	51	N/A	N/A	51	Yes
	23F_N04	Flat - Bedroom			70	52	51	N/A	N/A	51	Yes
	23F_N05	Flat - Living Room			70	51	51	N/A	N/A	51	Yes
	23F_N06	Flat - Bedroom			70	51	51	N/A	N/A	51	Yes
	23F_N07	Flat - Bedroom			70	51	51	N/A	N/A	51	Yes
	23F_N08	Flat - Living Room			70	51	50	N/A	N/A	50	Yes
	23F_N09	Flat - Bedroom			70	51	50	N/A	N/A	50	Yes
	23F_N10	Flat - Living Room			70	51	50	N/A	N/A	50	Yes
	23F_N11	Flat - Living Room			70	52	52	N/A	N/A	52	Yes
	23F_N12	Flat - Bedroom			70	52	52	N/A	N/A	52	Yes
	23F_N13	Flat - Living Room			70	53	52	N/A	N/A	52	Yes
	23F_N14	Flat - Bedroom			70	53	52	N/A	N/A	52	Yes
	23F_N15	Flat - Bedroom			70	53	52	N/A	N/A	52	Yes
	23F_N16	Flat - Living Room			70	54	54	N/A	N/A	54	Yes
	23F_N17	Flat - Bedroom			70	67	67	N/A	N/A	67	Yes
	23F_N18	Flat - Bedroom			70	68	68	N/A	N/A	68	Yes
	23F_N19	Flat - Living Room			70	68	68	N/A	N/A	68	Yes
	23F_N20	Flat - Bedroom			70	68	68	N/A	N/A	68	Yes
	23F_N21	Flat - Bedroom			70	67	67	N/A	N/A	67	Yes
	23F_N22	Flat - Living Room			70	68	68	N/A	N/A	68	Yes
	23F_N23	Flat - Bedroom			70	68	68	N/A	N/A	68	Yes
	23F_N24	Flat - Living Room			70	67	67	N/A	N/A	67	Yes
	23F_N25	Flat - Bedroom			70	68	68	N/A	N/A	68	Yes
	23F_N26	Flat - Bedroom			70	66	66	N/A	N/A	66	Yes
	23F_N27	Flat - Bedroom			70	68	68	N/A	N/A	68	Yes
	23F_N28	Flat - Living Room			70	67	68	N/A	N/A	68	Yes
	23F_N29	Flat - Living Room			70	67	67	N/A	N/A	67	Yes
	23F_N30	Flat - Bedroom			70	67	67	N/A	N/A	67	Yes
	23F_N31	Flat - Bedroom			70	68	68	N/A	N/A	68	Yes
	23F_N32	Flat - Bedroom			70	68	68	N/A	N/A	68	Yes
	23F_N33	Flat - Living Room			70	69	69	N/A	N/A	69	Yes
	23F_N34	Flat - Living Room			70	70	70	N/A	N/A	70	Yes
	23F_N35	Flat - Bedroom			70	**71**	**71**	Type 1	5	66	Yes
	23F_N36	Flat - Living Room			70	**71**	**71**	Type 2	7	64	Yes
	23F_N37	Flat - Living Room			70	66	66	N/A	N/A	66	Yes
	23F_N38	Flat - Living Room			70	51	51	N/A	N/A	51	Yes
24/F	24F_N01	Flat - Bedroom	+120.78	+122.0	70	51	51	N/A	N/A	51	Yes
	24F_N02	Flat - Bedroom			70	51	51	N/A	N/A	51	Yes
	24F_N03	Flat - Living Room			70	50	50	N/A	N/A	50	Yes
	24F_N04	Flat - Bedroom			70	51	50	N/A	N/A	50	Yes
	24F_N05	Flat - Living Room			70	50	50	N/A	N/A	50	Yes
	24F_N06	Flat - Bedroom			70	50	49	N/A	N/A	49	Yes
	24F_N07	Flat - Bedroom			70	49	49	N/A	N/A	49	Yes
	24F_N08	Flat - Living Room			70	49	49	N/A	N/A	49	Yes
	24F_N09	Flat - Bedroom			70	49	49	N/A	N/A	49	Yes
	24F_N10	Flat - Living Room			70	49	49	N/A	N/A	49	Yes
	24F_N11	Flat - Living Room			70	52	51	N/A	N/A	51	Yes
	24F_N12	Flat - Bedroom			70	52	51	N/A	N/A	51	Yes
	24F_N13	Flat - Living Room			70	52	52	N/A	N/A	52	Yes
	24F_N14	Flat - Bedroom			70	52	52	N/A	N/A	52	Yes
	24F_N15	Flat - Living Room			70	54	53	N/A	N/A	53	Yes
	24F_N16	Flat - Bedroom			70	67	67	N/A	N/A	67	Yes
	24F_N17	Flat - Bedroom			70	68	68	N/A	N/A	68	Yes
	24F_N18	Flat - Living Room			70	68	68	N/A	N/A	68	Yes
	24F_N19	Flat - Bedroom			70	67	67	N/A	N/A	67	Yes
	24F_N20	Flat - Bedroom			70	67	67	N/A	N/A	67	Yes
	24F_N21	Flat - Living Room			70	68	68	N/A	N/A	68	Yes
	24F_N22	Flat - Bedroom			70	68	68	N/A	N/A	68	Yes
	24F_N23	Flat - Living Room			70	67	67	N/A	N/A	67	Yes
	24F_N24	Flat - Bedroom			70	68	68	N/A	N/A	68	Yes
	24F_N25	Flat - Bedroom			70	66	66	N/A	N/A	66	Yes
	24F_N26	Flat - Bedroom			70	67	67	N/A	N/A	67	Yes
	24F_N27	Flat - Living Room			70	67	67	N/A	N/A	67	Yes
	24F_N28	Flat - Living Room			70	67	67	N/A	N/A	67	Yes
	24F_N29	Flat - Bedroom			70	67	67	N/A	N/A	67	Yes
	24F_N30	Flat - Bedroom			70	68	68	N/A	N/A	68	Yes
	24F_N31	Flat - Bedroom			70	68	68	N/A	N/A	68	Yes
	24F_N32	Flat - Living Room			70	69	69	N/A	N/A	69	Yes
	24F_N33	Flat - Living Room			70	70	70	N/A	N/A	70	Yes
	24F_N34	Flat - Bedroom			70	**71**	**71**	Type 1	5	66	Yes
	24F_N35	Flat - Living Room			70	**71**	**71**	Type 2	7	64	Yes
	24F_N36	Flat - Living Room			70	66	66	N/A	N/A	66	Yes
	24F_N37	Flat - Living Room			70	50	51	N/A	N/A	51	Yes
25/F	25F_N01	Flat - Bedroom	+123.85	+125.1	70	52	51	N/A	N/A	51	Yes
	25F_N02	Flat - Bedroom			70	51	51	N/A	N/A	51	Yes
	25F_N03	Flat - Living Room			70	51	51	N/A	N/A	51	Yes
	25F_N04	Flat - Bedroom			70	51	51	N/A	N/A	51	Yes
	25F_N05	Flat - Living Room			70	50	50	N/A	N/A	50	Yes
	25F_N06	Flat - Bedroom			70	50	50	N/A	N/A	50	Yes
	25F_N07	Flat - Bedroom			70	50	50	N/A	N/A	50	Yes
	25F_N08	Flat - Living Room			70	50	50	N/A	N/A	50	Yes
	25F_N09	Flat - Bedroom			70	50	50	N/A	N/A	50	Yes
	25F_N10	Flat - Living Room			70	50	50	N/A	N/A	50	Yes
	25F_N11	Flat - Living Room			70	52	52	N/A	N/A	52	Yes
	25F_N12	Flat - Bedroom			70	52	52	N/A	N/A	52	Yes
	25F_N13	Flat - Living Room			70	53	52	N/A	N/A	52	Yes
	25F_N14	Flat - Bedroom			70	53	52	N/A	N/A	52	Yes
	25F_N15	Flat - Living Room			70	54	54	N/A	N/A	54	Yes
	25F_N16	Flat - Bedroom			70	67	67	N/A	N/A	67	Yes
	25F_N17	Flat - Bedroom			70	67	67	N/A	N/A	67	Yes
	25F_N18	Flat - Living Room			70	68	68	N/A	N/A	68	Yes
	25F_N19	Flat - Bedroom			70	67	67	N/A	N/A	67	Yes
	25F_N20	Flat - Bedroom			70	67	67	N/A	N/A	67	Yes
	25F_N21	Flat - Living Room			70	68	68	N/A	N/A	68	Yes
	25F_N22	Flat - Bedroom			70	68	68	N/A	N/A	68	Yes
	25F_N23	Flat - Living Room			70	67	67	N/A	N/A	67	Yes
	25F_N24	Flat - Bedroom			70	67	67	N/A	N/A	67	Yes
	25F_N25	Flat - Bedroom			70	66	66	N/A	N/A	66	Yes
	25F_N26	Flat - Bedroom			70	67	67	N/A	N/A	67	Yes
	25F_N27	Flat - Living Room			70	67	67	N/A	N/A	67	Yes
	25F_N28	Flat - Living Room			70	67	67	N/A	N/A	67	Yes
	25F_N29	Flat - Bedroom			70	67	67	N/A	N/A	67	Yes
	25F_N30	Flat - Bedroom			70	67	67	N/A	N/A	67	Yes
	25F_N31	Flat - Bedroom			70	68	68	N/A	N/A	68	Yes
	25F_N32	Flat - Living Room			70	69	69	N/A	N/A	69	Yes
	25F_N33	Flat - Living Room			70	70	70	N/A	N/A	70	Yes
	25F_N34	Flat - Bedroom			70	**71**	**71**	Type 1	5	66	Yes
	25F_N35	Flat - Living Room			70	**71**	**71**	Type 2	7	64	Yes
	25F_N36	Flat - Living Room			70	66	66	N/A	N/A	66	Yes
	25F_N37	Flat - Living Room			70	51	51	N/A	N/A	51	Yes

Predicted Road Traffic Noise Levels for 2045 (Mitigated Scenario)

Floor	NAP ID	Description	Floor Height, mPD	Assessment Height, mPD	Noise Criteria, dB(A)	Unmitigated Noise Level, $L_{10\ (1\ hour)}$, dB(A)		Proposed Noise Mitigation Measures	Estimated Noise Attenuation, dB(A)	Mitigated Noise Level, $L_{10\ (1\ hour)}$, dB(A)	Compliance
						AM	PM				
26/F	26F_N01	Flat - Bedroom	+126.93	+128.1	70	52	52	N/A	N/A	52	Yes
	26F_N02	Flat - Bedroom			70	52	52	N/A	N/A	52	Yes
	26F_N03	Flat - Living Room			70	52	51	N/A	N/A	51	Yes
	26F_N04	Flat - Bedroom			70	52	52	N/A	N/A	52	Yes
	26F_N05	Flat - Living Room			70	51	51	N/A	N/A	51	Yes
	26F_N06	Flat - Bedroom			70	51	51	N/A	N/A	51	Yes
	26F_N07	Flat - Bedroom			70	51	51	N/A	N/A	51	Yes
	26F_N08	Flat - Living Room			70	51	51	N/A	N/A	51	Yes
	26F_N09	Flat - Bedroom			70	51	51	N/A	N/A	51	Yes
	26F_N10	Flat - Living Room			70	52	51	N/A	N/A	51	Yes
	26F_N11	Flat - Living Room			70	53	52	N/A	N/A	52	Yes
	26F_N12	Flat - Bedroom			70	53	52	N/A	N/A	52	Yes
	26F_N13	Flat - Living Room			70	53	53	N/A	N/A	53	Yes
	26F_N14	Flat - Bedroom			70	53	53	N/A	N/A	53	Yes
	26F_N15	Flat - Living Room			70	54	54	N/A	N/A	54	Yes
	26F_N16	Flat - Bedroom			70	67	67	N/A	N/A	67	Yes
	26F_N17	Flat - Bedroom			70	67	67	N/A	N/A	67	Yes
	26F_N18	Flat - Living Room			70	68	68	N/A	N/A	68	Yes
	26F_N19	Flat - Bedroom			70	67	67	N/A	N/A	67	Yes
	26F_N20	Flat - Bedroom			70	67	67	N/A	N/A	67	Yes
	26F_N21	Flat - Living Room			70	68	68	N/A	N/A	68	Yes
	26F_N22	Flat - Bedroom			70	68	68	N/A	N/A	68	Yes
	26F_N23	Flat - Living Room			70	67	67	N/A	N/A	67	Yes
	26F_N24	Flat - Bedroom			70	67	67	N/A	N/A	67	Yes
	26F_N25	Flat - Bedroom			70	66	66	N/A	N/A	66	Yes
	26F_N26	Flat - Bedroom			70	67	67	N/A	N/A	67	Yes
	26F_N27	Flat - Living Room			70	67	67	N/A	N/A	67	Yes
	26F_N28	Flat - Living Room			70	67	67	N/A	N/A	67	Yes
	26F_N29	Flat - Bedroom			70	67	67	N/A	N/A	67	Yes
	26F_N30	Flat - Bedroom			70	67	67	N/A	N/A	67	Yes
	26F_N31	Flat - Bedroom			70	68	68	N/A	N/A	68	Yes
	26F_N32	Flat - Living Room			70	69	69	N/A	N/A	69	Yes
	26F_N33	Flat - Living Room			70	70	70	N/A	N/A	70	Yes
	26F_N34	Flat - Bedroom			70	**71**	70	Type 1	5	66	Yes
	26F_N35	Flat - Living Room			70	**71**	70	Type 2	7	64	Yes
	26F_N36	Flat - Living Room			70	67	66	N/A	N/A	66	Yes
	26F_N37	Flat - Living Room			70	52	52	N/A	N/A	52	Yes

Results Summary	
Total No. of NAPs	860
Total No. of NAPs with exceedance	0
Compliance Rate	100%

APPENDIX 3.1

INVENTORY OF MAJOR FIXED NOISE SOURCES

Fixed Noise Source Inventory

Source ID	Noise Source	X coordinate	Y coordinate	Elevation, mPD	SWL (Daytime) [1], dB(A)	SWL (Night-time) [1,2], dB(A)
S01	GDS Data Centre - Cooling Tower	832181	825499	146.7	95	95
S02	GDS Data Centre - Cooling Tower	832187	825501	146.7	95	95
S03	GDS Data Centre - Cooling Tower	832194	825503	146.7	95	95
S04	GDS Data Centre - Cooling Tower	832201	825506	146.7	95	95
S05	GDS Data Centre - Cooling Tower	832208	825508	146.7	95	95
S06	GDS Data Centre - Cooling Tower	832214	825511	146.7	95	95
S07	Hotel Ease Tsuen Wan - Air-cooled Chiller	832186	825475	104.9	92	92
S08	Hotel Ease Tsuen Wan - Air-cooled Chiller	832190	825477	104.9	92	92
S09	Hotel Ease Tsuen Wan - Air-cooled Chiller	832194	825476	104.9	92	92
S10	Kwai Wu Industrial Building - Cooling Tower	832244	825480	99.3	86	86
S11	Kwai Wu Industrial Building - Cooling Tower	832244	825477	99.3	86	86
S12	Silka Tsuen Wan Hotel - Cooling Tower	832364	825551	88.9	91	91
S13	Silka Tsuen Wan Hotel - Cooling Tower	832372	825551	88.9	91	91
S14	iTech Tower 2 - Cooling Tower	832113	825386	116.0	94	94
S15	iTech Tower 2 - Cooling Tower	832115	825382	116.0	94	94
S16	iTech Tower 2 - Cooling Tower	832121	825389	116.0	94	94
S17	iTech Tower 2 - Cooling Tower	832117	825376	116.0	94	94
S18	iTech Tower 2 - Cooling Tower	832119	825373	116.0	94	94
S19	iTech Tower 2 - Cooling Tower	832123	825380	116.0	94	94
S20	iTech Tower 2 - Cooling Tower	832125	825376	116.0	94	94
S21	Regent Centre - Air-cooled Chiller	832242	825389	127.6	92	92
S22	Regent Centre - Air-cooled Chiller	832249	825390	127.6	92	92
S23	Regent Centre - Air-cooled Chiller	832251	825356	130.0	92	92
S24	Regent Centre - Air-cooled Chiller	832258	825357	130.0	92	92
S25	Tung Tak Center - Cooling Tower	832237	825556	75.8	91	91
S26	Tung Tak Center - Cooling Tower	832235	825562	75.8	91	91
S27	Tung Tak Center - Cooling Tower	832233	825567	75.8	91	91
S28	Tung Tak Center - Cooling Tower	832230	825573	75.8	91	91
S29	Asia Trade Center - Air-cooled Chiller	832142	825650	180.9	93	93
S30	Asia Trade Center - Air-cooled Chiller	832176	825694	180.9	93	93
S31	Asia Trade Center - Air-cooled Chiller	832147	825656	180.9	97	97
S32	Asia Trade Center - Air-cooled Chiller	832150	825661	180.9	97	97
S33	Asia Trade Center - Air-cooled Chiller	832168	825683	180.9	97	97
S34	Asia Trade Center - Air-cooled Chiller	832172	825688	180.9	97	97

Notes:
[1] SWL is referenced from equipment catalogue of similar model.

Extract of Ryowo Cooling Tower Catalogue

菱和 ryowo™

RYOWO COOLING TOWER

FWS SERIES

Low Noise Cross Flow Type

FCS SERIES

Low Profile Low Noise Cross Flow Type

CTI CERTIFIED

IAF

UKAS QUALITY MANAGEMENT 9191

JAS-ANZ MANAGEMENT SYSTEM M4010005C

The RYOWO™ Group is the pioneer and manufacturer of fiberglass-reinforced polyester (FRP) cooling towers in Hong Kong.

We offer a full range of product lines in FRP, stainless steel and galvanized steel water-cooling towers. With our vital production station, Dongguan RYOWO Cooling Tower Company Limited, we manufacture, market and service a full range of water-cooling towers. Over 90% of the cooling tower parts are from our own factory and, as a result, control of cost and quality are ensured.

RYOWO has been a member of the Cooling Technology Institute since 1982. With our own R&D department and testing facilities, we have diffrent lines of products which are CTI-201 certified.

The FWS/FCS series, the highest standard of water-cooling towers with guaranteed cooling capacity. In order to expand the application of our cooling towers, we developed the integrated drift eliminator, and used the super low noise fan as an option in this series.

FWS/FCS

Cross Flow Type

CTI CERTIFIED

MANUFACTURER'S PUBLISHED THERMAL PERFORMANCE IS CERTIFIED BY THE COOLING TOWER INSTITUTE UNDER THE PROVISIONS OF STD-201(11)

CERTIFICATION VALIDATION NUMBER

C27A-04R05

THE COOLING TOWER YOU CAN RELY ON

MODEL DESIGNATION

FWS-300-15-AS /L

- STD-201 Certified Line
- Model Nos
- /E is for integrated drift eliminator
- /AE is for additional drift eliminator
- /L is for additional louver installed in front of air inlet face
- /SLF is for super low noise fan
- GI - for FRP Casing & Basin, HDG Structure
- SS - for FRP Casing & Basin, SS Structure
- AG - for HDG Casing, Basin & Structure
- AS - for SS Casing, Basin, SS Structure

There are 407 models in total for the FWS/FCS series with different configurations to meet various requirements and provide a high degree of flexibility.

Highly flexible

Factory assembled

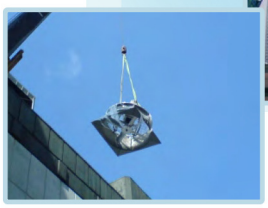

Most FWS cooling towers can be factory assembled and delivered to site.

All FWS/FCS models can be fitted with RYOWO special integrated drift eliminators to achieve drift loss less than 0.005% and equipped with OSHA handrail and caged ladder to comply with particular requirements.

Complied with OSHA requirement

Accessible

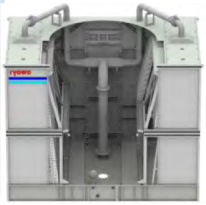

Internal pipe

Super low noise fan to reduce the sound power level, maintaining the same thermal performance.

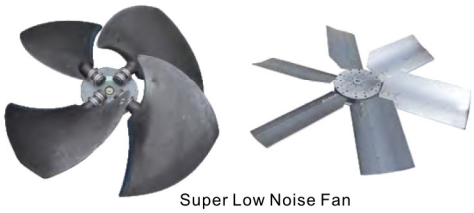

Super Low Noise Fan

FRP / HDG / SS MATERIAL ARE AVAILABLE

All Stainless steel

All Hot dip galvanized

FRP Casing + SS Basin

The standard FWS/FCS cooling towers are made of FRP casing & basin with hot dip galvanized structure. Optional stainless steel casing & basin and structure can also be provided upon request.

Hong Kong & Macau

Ritz Carlton Hotel
Hong Kong
FWS-700-37-GI x 4

Kai Tak District Cooling Plant
Hong Kong
FWS-800-55-SS x 10

Global Switch Data Centre
Hong Kong
FWS-800F-55-AF x 2
FWS-600-30-AF-2 x 5

Hong Kong Airlines Training Centre
Hong Kong
FWS-700-37-GI x 2
FWS-330-22-GI x 3

Midfield Concourse
Hong Kong International Airport
FWS-800-55-GI x 5

Racecourse District Cooling System
Shatin Hong Kong
FWS-250-11-SS-2 x 2
FWS-275-15-SS-3 x 2

Hong Kong Sanatorium and Hospital
Hong Kong
FWS-330-22-AF/SLF x 4

China Mobile Data Centre
Hong Kong
FWS-330-22-AS x 7

Studio City
Macau
FWS-800-37-AGI-3 x 6

Lisboa Palace
Macau
FWS-700-37-AG-3 x 7

Galaxy Casino & Resort PII
Macau
FWS-700-37-GI x 4
FWS-600-15-GI-4 x 7

Theme Park
Macau
FWS-800F-55-SS/SLF-2 x 5

China & Overseas

International Commerce Centre
Nanjing China
FWS-800-45-GI x 11 FWS-600-22-GI x 3
FWS-400-22-GI x 3

Hongkong-Zhuhai-Macau Bridge
China
FWS-700-37-GI x 7

Spring City 66
Kunming China
FWS-350-22-SS x 15

Horse race Training Centre
Hong Kong Jockey Club
Conghua China
FWS-700-37-GI x 3
FWS-127-11-GI x2

DPT Electronics Co Ltd
Dongguan China
FWS-500-22-GI x 7

Heyuan Shopping Mall
GuangDong China
FWS-800-22-GI x 9
FWS-400-22-GI x 3

Bridgestone America Tire Operation
North Carlina USA
FWS-800-22-GI x 5

Misr University for Science &Technology
Cairo Egypt
FWS-800-45-GI x 4

Central Pumping Station
Kuwait
FWS-500-22-AF x 4

Asian Hotel
Sri Lanka
FWS-169-7.5-GI x 4

Agana Shopping Mall
Saipan
FWS-500-22-GI x 3

Winery Factory
Chile
FWS-169-15-SS x 1

RYOWO (HOLDING)CO.,LTD
Rm.1218,Argyle Centre 1,688 Nathan Road,Mongkok,Kowloon,Hong Kong.
Tel: (852) 2391-8381/5 Fax: (852) 2789-3802
www.ryowo.com ryinfo@ryowo.com

APRIL 2008

MEMBER

SOUND DATA SHEET FOR COOLING TOWER

Product Line: **FWS Series / CTI STD-201 Certified**
Model: **FWS-600-30**
Number of Fans: **ONE**
Fan Motor Power: **30 kW**
Number of Motors: **ONE**

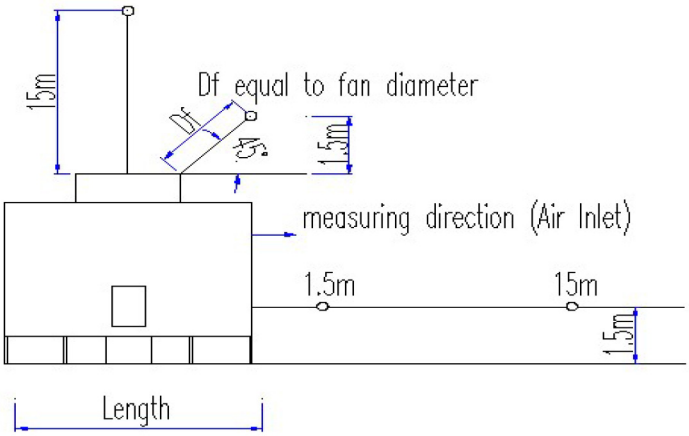

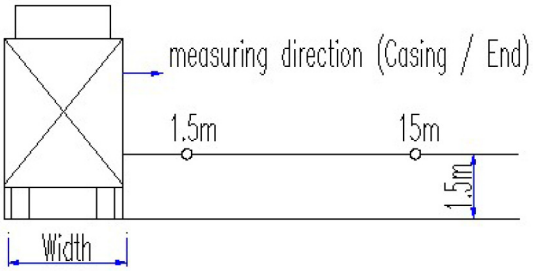

Octave Band Hz	Sound Pressure Level (SPL), dBA										Sound Power Level (PWL) dBA
	Air Inlet		End		Air Inlet		End		Over Head		
	1.5m	15m	1.5m	15m	1.5m	15m	1.5m	15m	1.5m	15m	
63	53	39	47	41	53	39	47	41	53	43	72
125	65	53	58	46	65	53	58	46	64	54	83
250	71	58	63	54	71	58	63	54	70	60	89
500	70	59	64	55	70	59	64	55	73	61	91
1K	69	57	61	53	69	57	61	53	74	59	88
2K	63	51	55	47	63	51	55	47	68	55	83
4K	58	45	49	42	58	45	49	42	64	51	78
8K	53	40	44	38	53	40	44	38	60	46	73
dBA	76	64	68	60	76	64	68	60	78	66	95

Notes:
1/ The effects of multiple cell units and sound attenuating accessories are excluded in the sound data.
2/ Data developed in accordance with Cooling Technology Institute (CTI) ATC-128 for small towers.

SWL of 95 dB(A) adopted for cooling towers on the rooftop of GDS Data Centre

RYOWO (HOLDING)CO.,LTD
Rm.1218,Argyle Centre 1,688 Nathan Road,Mongkok,Kowloon,Hong Kong.
Tel: (852) 2391-8381/5 Fax: (852) 2789-3802
www.ryowo.com ryinfo@ryowo.com

APRIL 2008

MEMBER

SOUND DATA SHEET FOR COOLING TOWER

Product Line: **FWS Series / CTI STD-201 Certified**
Model: **FWS-600-15**
Number of Fans: **ONE**
Fan Motor Power: **15 kW**
Number of Motors: **ONE**

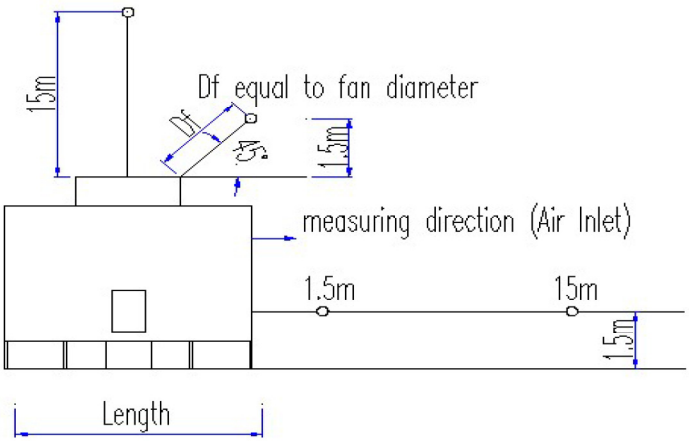

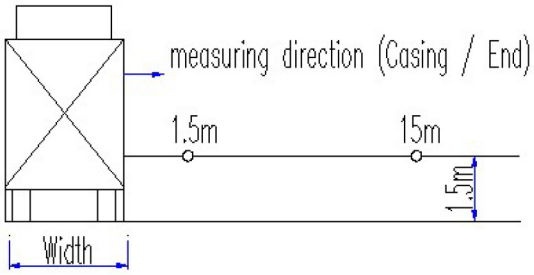

Octave Band Hz	Sound Pressure Level (SPL), dBA										Sound Power Level (PWL) dBA
	Air Inlet		End		Air Inlet		End		Over Head		
	1.5m	15m	1.5m	15m	1.5m	15m	1.5m	15m	1.5m	15m	
63	50	36	44	37	50	36	44	37	49	39	68
125	62	45	54	42	62	45	54	42	60	49	77
250	68	54	59	50	68	54	59	50	65	56	85
500	68	56	59	51	68	56	59	51	68	56	86
1K	65	55	57	49	65	55	57	49	68	55	85
2K	60	48	51	42	60	48	51	42	63	51	79
4K	56	43	45	37	56	43	45	37	59	47	75
8K	51	38	41	31	51	38	41	31	56	42	69
dBA	73	60	64	55	73	60	64	55	73	62	91

Notes:
1/ The effects of multiple cell units and sound attenuating accessories are excluded in the sound data.
2/ Data developed in accordance with Cooling Technology Institute (CTI) ATC-128 for small towers.

SWL of 91 dB(A) adopted for cooling towers on the rooftop of Silka Tsuen Wan Hotel and Tung Tak Center

RYOWO (HOLDING)CO.,LTD
Rm.1218,Argyle Centre 1,688 Nathan Road,Mongkok,Kowloon,Hong Kong.
Tel: (852) 2391-8381/5 Fax: (852) 2789-3802
www.ryowo.com ryinfo@ryowo.com

APRIL 2008

MEMBER

SOUND DATA SHEET FOR COOLING TOWER

Product Line: **FWS Series / CTI STD-201 Certified**
Model: **FWS-600-22**
Number of Fans: **ONE**
Fan Motor Power: **22 kW**
Number of Motors: **ONE**

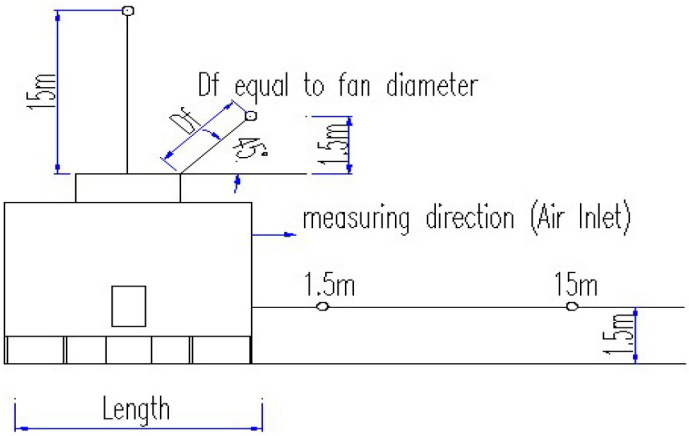

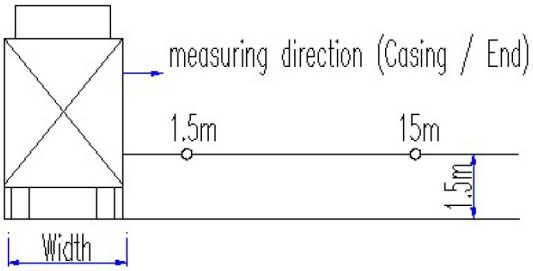

Octave Band Hz	Sound Pressure Level (SPL), dBA										Sound Power Level (PWL) dBA
	Air Inlet		End		Air Inlet		End		Over Head		
	1.5m	15m	1.5m	15m	1.5m	15m	1.5m	15m	1.5m	15m	
63	52	38	47	40	52	38	47	40	53	42	71
125	64	47	57	45	64	47	57	45	63	53	80
250	70	56	62	53	70	56	62	53	69	59	88
500	69	59	62	54	69	59	62	54	72	59	89
1K	67	57	60	52	67	57	60	52	72	58	87
2K	62	50	54	45	62	50	54	45	67	54	82
4K	57	44	47	40	57	44	47	40	63	50	77
8K	52	39	43	34	52	39	43	34	59	45	72
dBA	75	63	67	58	75	63	67	58	77	65	94

Notes:
1/ The effects of multiple cell units and sound attenuating accessories are excluded in the sound data.
2/ Data developed in accordance with Cooling Technology Institute (CTI) ATC-128 for small towers.

SWL of 94 dB(A) adopted for cooling towers on the rooftop of iTech Tower 2

菱和
ryowo™

FRP COUNTER FLOW FT SERIES

COOLING TOWER

STRUCTURE

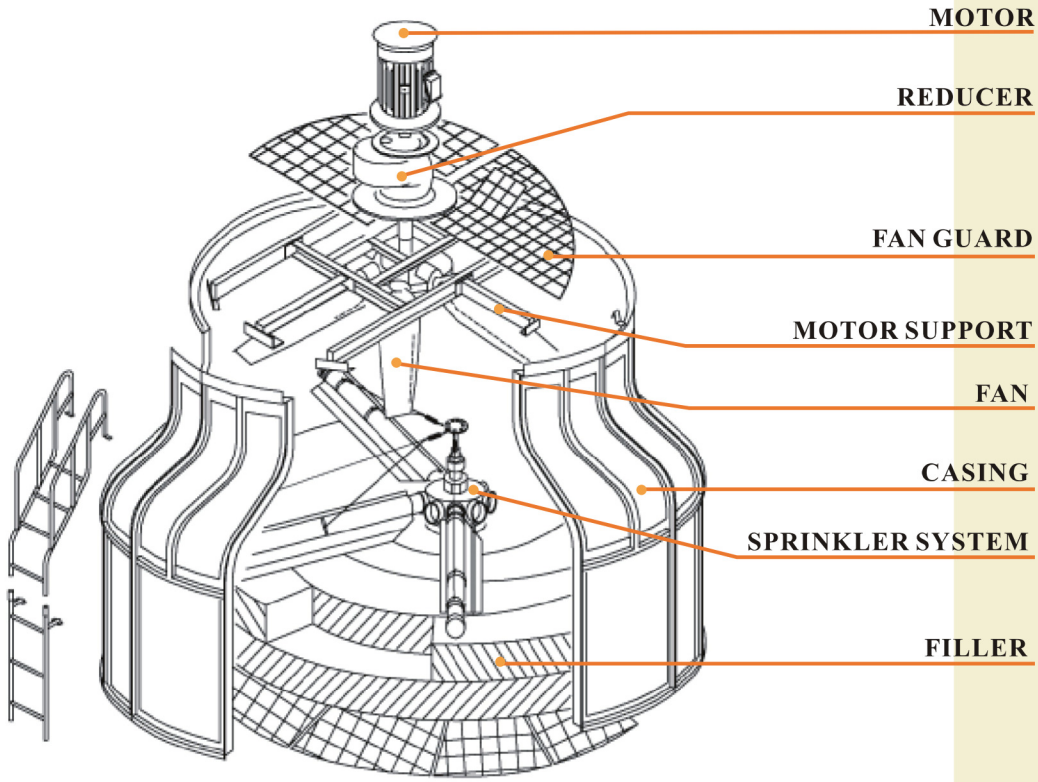

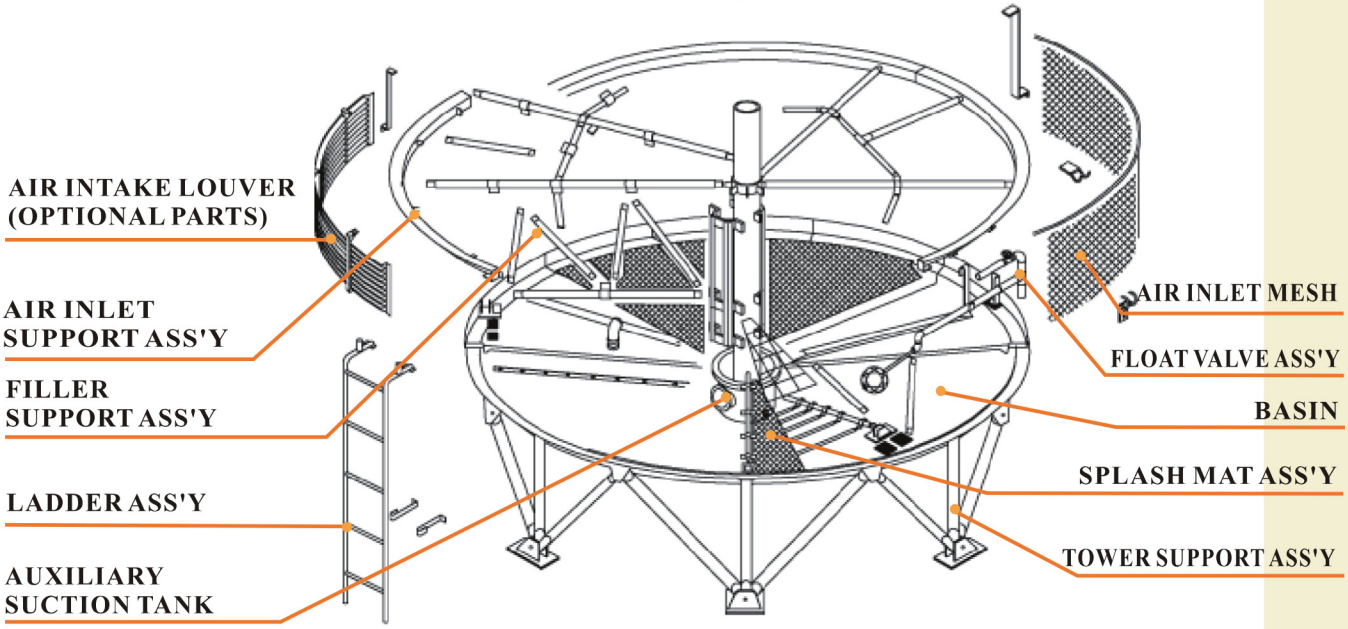

PRINCIPLE OF OPERATION

Hot water is distributed over the filler through the low velocity automatic sprinkler system and is mixed with the upward draft of ambient air causing evaporation and thus heat is removed from the water. The cooled water falls into the basin and is pumped to the heat sources for recirculation.

COMPONENT FUNCTION & FEATURE

AXIAL FAN

All fans are induced-draft axial type with adjustable pitch. Material chosen are non-corrosion of plastic, FRP or alu-minium alloy. The high efficiency design ensures low running cost and the lowest possible noise level . Fan blade pitches is factory set and balanced.

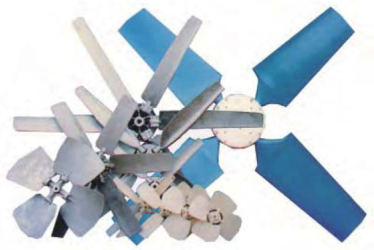

MOTOR

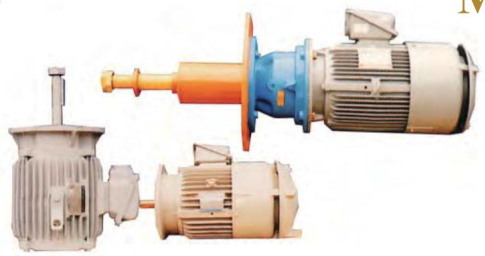

The motors, totally enclosed, fan cooled flange type, 380V/ 3ph/ 50 Hz, induction weather proof, are specially designed for RYOWO. Motors from 5.5 kw and up are Y- start and below are direct-on-line start.

TRANSMISSION SYSTEM

The fans of small models are designed to be driven by low speed motor of 6,8,10 or 12 poles which can minimise the numbers of transmission parts used. For large models, the fans are vee-belt or gear driven with 4 poles motors so the speed of fans can be adjustable to suit various application.

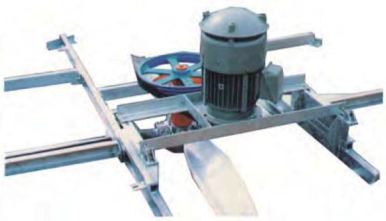

SPRINKLER SYSTEM

Automatic rotary sprinkler system with rotary head and sprinkler pipe distributes the hot water over the entire face area of the filler. Sprinkler pipes are non-clogging, require low-pressure to operate, and assures uniform water flow with minimal operating pump head. The F.R.P. eliminators attached to sprinkler pipes are specifically designed for Low pre Ssure drop and minimises the drift loss of water.

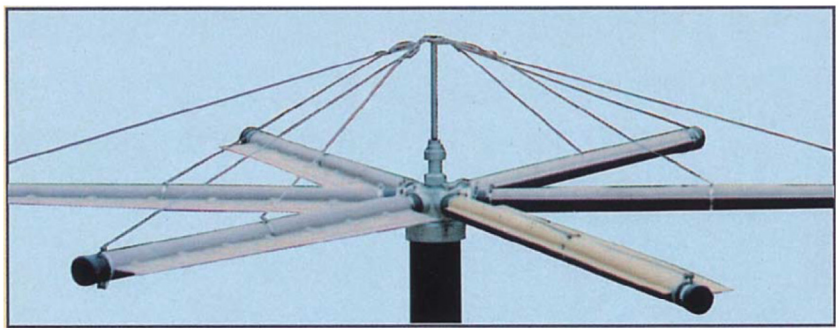

COMPONENT FUNCTION & FEATURE

CASING & BASIN

F.R.P. (fibreglass reinforced polyester) formed casings are durable, non-corrosive, weather-proof, and light weight. Cylindrical form is shaped to fully withstand wind pressure, vibration and such F.R.P. casings obliviate need for painting, reduce maintenance costs and guarantee long dependable service.

Bowl-shape basins are also made from F.R.P. with built in socket or flanged outlets for piping connections. For large models, a F.R.P. aux. suction tank is employed and fitted with piping flanges or sockets.

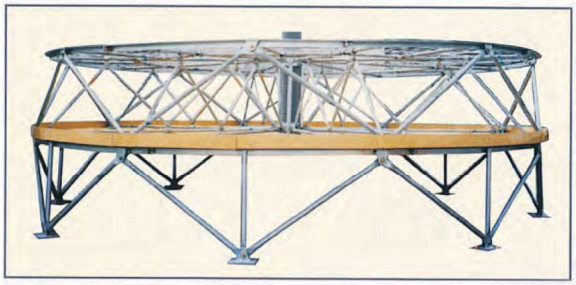

STEEL STRUCTURE

All supporting steel members are hot-dip galvanized to minimise rusting and corrosion ensuring long service life even in corrosive atmosphere. The stainless hardware members are also available upon request.

FILLER

High performance RYOWO V-30 film filler is the heart of the tower. The specially formed PVC sheets maximize the air/water contact area and minimise air pressure drop to assure efficient heat transfer while keeping fan power requirement low. It is virtually immune to corrosion and decay.

Eliminator

Specially made drift eliminator consisted of 2 types of sheets forms a “v” shape path for the transmission of the cooling tower discharge air stream. The small water droplets in the stream impact the surfaces of the drift eliminator sheets and are separated from the stream such that the drift loss ratio maintain at less than 0.001% of circulating water flow rate.

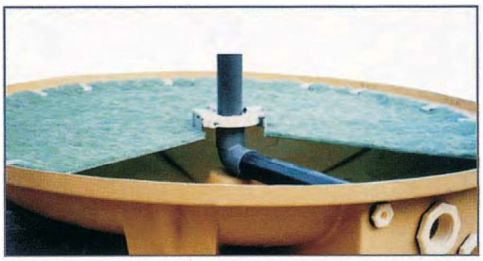

SPLASH MAT (LOW NOISE MODELS)

Specially designed noise absorbing splash mat is provided for low noise models on the water basin to minimise the unpleasant water dripping noise in the basin.

SPECIFICATION FOR FT SERIES

SPECIFICATION FOR FT SERIES

ITEM	MODEL		FT-8	FT-10	FT-15	FT-20	FT-25	FT-30	FT-40	FT-50	FT-60	FT-80	FT-100	FT-125	FT-150	FT-175	FT-200	FT-225	FT-250	FT-300	FT-350	FT-400	FT-500	FT-600	FT-700	FT-800	FT-1000
Capacity	27 ºC WB Circulating water flow rate	m^3/ hr	6.2	7.8	11.7	15.6	19.5	23.4	31.2	39.1	46.9	62.5	78.1	97.7	117.2	136.7	156.2	175.8	195.3	234.4	273.4	312.5	390.6	468.7	546.8	625.0	781.2
	27 ºC WB Make-up water (Approx.)	m^3/ hr	0.1	0.1	0.2	0.2	0.3	0.3	0.4	0.6	0.7	0.9	1.1	1.4	1.7	2.0	2.2	2.5	2.8	3.4	3.9	4.5	5.6	6.7	7.8	8.9	11.2
	28 ºC WB Circulating water flow rate	m^3/ hr	5.6	7.4	10.6	14.4	17.8	21.5	28.7	36.3	42.5	58.8	70.6	88.2	107.5	125.0	142.5	160.0	176.2	212.5	250.0	287.5	337.5	431.2	512.4	575.0	718.7
	28 ºC WB Make-up water (Approx.)	m^3/ hr	0.1	0.1	0.2	0.2	0.3	0.3	0.4	0.5	0.6	0.8	1.0	1.3	1.5	1.8	2.0	2.3	2.5	3.0	3.6	4.1	4.8	6.2	7.3	8.2	10.3
	Air flow rate (Approx.)	m^3/ min	70	85	140	160	230	280	330	420	450	700	830	950	1150	1200	1250	1600	1750	2000	2200	2450	2700	3500	3750	5000	5400
	Hot water temperature	ºC	37																								
	Cold water temperature	ºC	32																								
Overall Dimension	Diameter (φ)	mm	920	920	1160	1160	1490	1660	1660	1890	2100	2100	2900	2900	2900	3310	3310	3960	3960	4360	4760	4760	5600	6600	6600	7600	7600
	Height (H)	mm	1560	1700	1585	1835	1945	1885	2035	2110	2300	2475	2910	3110	3110	3300	3450	3920	3920	3990	4195	4255	4590	5310	5510	5660	5860
	Height (w/o motor) (m)	mm	1390	1530	1395	1645	1760	1720	1785	1860	1980	2155	2590	2790	2790	2880	3030	3300	3300	3290	3495	3495	3830	4470	4670	4720	4940
Material	Air inlet mesh		PVC																								
	Basin		FRP																								
	Casing		FRP																								
	Eliminator		FRP																								
	Fan		ABS Plastic								FRP					Aluminium alloy								FRP			
	Filler		PVC																								
	Motor support		Steel (Hot-dip galvanized)																								
	Sprinkler head		ABS Plastic										Aluminium alloy														
	Sprinkler pipe		PVC pipe																								
	Stand pipe		PVC pipe																								
	Structure		Steel (Hot-dip galvanized)																								
Fan	TYPE		Axial-flow																								
	Diameter	mm	550	640		770			930		1200		1500			1800		2400				3000		3400		3700	
	Speed	rpm				970					750					600		450				375		314			
	Driven type		Direct driven															Belt driven						Gear driven			
Motor	TYPE		Totally enclosed fan cooled outdoor 3 phase induction motor																								
	Power source		380V / 3 / 50Hz																								
	Rated output	kw	0.18		0.37		0.75			1.5			2.2			3.7		5.5		7.5		11		15		22	
	No of pole	Pole				6							8			10		4									
Distribution System	TYPE		Automatic sprinkler system																								
	Inlet dia	mm	40		50			80			100		125		150			200					250			300	
	Outlet dia		15		20					40				65						75			100	75		100	
	No of outlet					4					6		4					6						8		10	
Piping	Inlet	mm	40		50			80			100		125		150			200					250			300	
	Outlet	mm	40		50			80			100		125		150			200					250			300	
	Drain	mm					25							50						80				100			
	Overflow	mm					25							50						80				100			
	Float valve	mm					15						20			25				32				50		80	
	Manual make-up	mm					15							20		25				32				50		80	
Weight	Dry weight	Kg	56	65	75	85	105	130	150	180								00	1350	1550	1720	2050	2450	3950	4050	4700	4900
	Operating weight	Kg	140	150	200	210	290	370	390	550								00	2750	3350	3720	3950	6150	9350	9450	11900	12100
Noise Level	Sound pressure level	dBA	45.5	47	48	50	52	54	58	59								3	63	64	64.5	61.5	62	65	66	73	74

SWL of 86.1 dB(A) adopted for Cooling Tower on the rooftop of Kwai Wu Industrial Building

NOTE : Nominal cooling capacity is based on 13 ℓ / min / RT (1 RT=3,900 Kcal / hr) at 37°C inlet water tpmperature, 32°C outlet water temperature and 27°C ambient wet bulb temperature.

The SPLs are measured 16m horizontally from the edge of the tower at 1.5m above the foundation level.

Pump head is obtained by adding resistance of piping/condenser and the tower height(H).

The unit dimension in this catalogue is metric. Specifications listed in this catalogue are subject to change without further noticefor technical improvement of our products.

FT OR FT/LN SERIES QUICK SELECTION TABLE

(20°CWB~30°CWB)

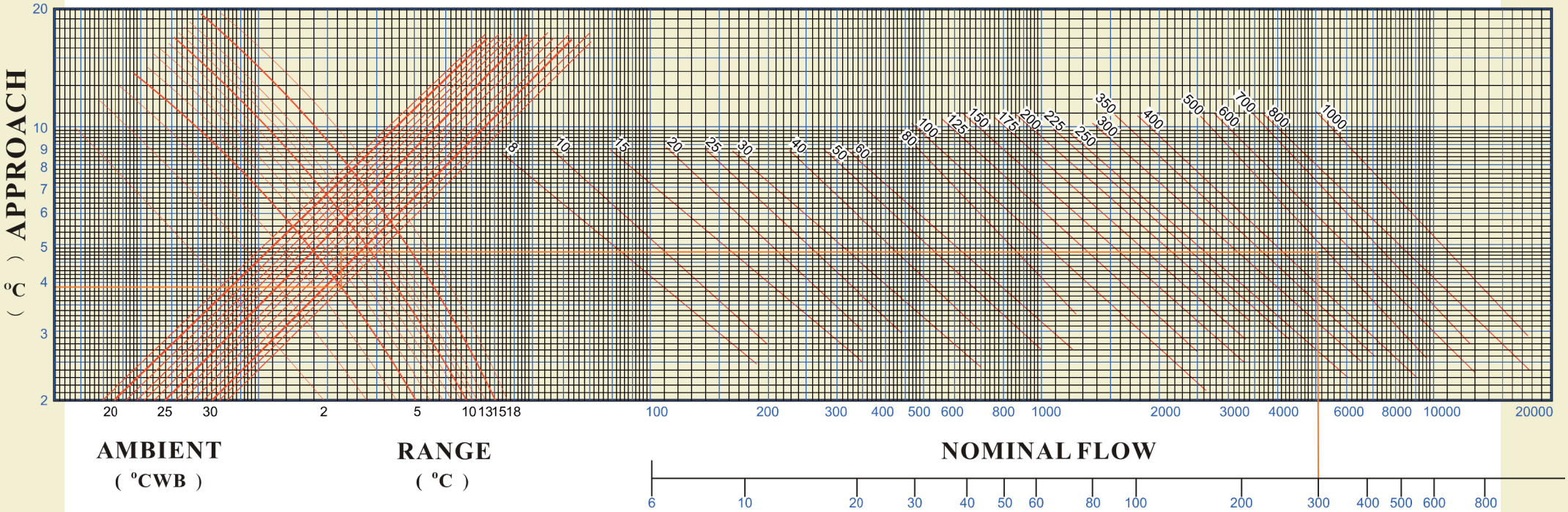

EXAMPLE:

RATE :300m³/hr

INLET WATER TEMP:37°C

OUTLET WATER TEMP :32°C

WET BULB TEMP :28°C

RANGE: INLET WATER TEMP-OUTLET WATER TEMP
: 37°C - 32°C = 5°C

APPROACH: OUTLET WATER TEMP -WET BULB TEMP
: 37°C - 32°C = 5°C

TOWER SELECTED: FT - 500 OR FT/LN - 500

COOLING TOWER	CT							
NOMINAL FLOW	m³/hr							
INLET WATER	HWT°C							
OUTLET WATER	CWT°C							
AMBIENT WB	WB°C							
RANGE	(HWT-CWT)°C							
APPROACH	(CWT-WB)°C							
MODEL								

SPECIFICATION FOR FT/LN(LOW NOISE TYPE)

SPECIFICATION FOR FT/LN(LOW NOISE TYPE)

ITEM	MODEL			FT/LN 8	FT/LN 10	FT/LN 15	FT/LN 20	FT/LN 25	FT/LN 30	FT/LN 40	FT/LN 50	FT/LN 60	FT/LN 80	FT/LN 100	FT/LN 125	FT/LN 150	FT/LN 175	FT/LN 200	FT/LN 225	FT/LN 250	FT/LN 300	FT/LN 350	FT/LN 400	FT/LN 500	FT/LN 600	FT/LN 700	FT/LN 800	FT/LN 1000
Capacity	27 ℃ WB	Circulating water flow rate	m^3/ hr	6.2	7.8	11.7	15.6	19.5	23.4	31.2	39.1	46.9	62.5	78.1	97.7	117.2	136.7	156.2	175.8	195.3	234.4	273.4	312.5	390.6	468.7	546.8	625.0	781.2
		Make-up water (Approx.)	m^3/ hr	0.1	0.1	0.2	0.2	0.3	0.3	0.4	0.6	0.7	0.9	1.1	1.4	1.7	2.0	2.2	2.5	2.8	3.4	3.9	4.5	5.6	6.7	7.8	8.9	11.2
	28 ℃ WB	Circulating water flow rate	m^3/ hr	5.6	7.1	10.6	14.4	17.8	21.5	28.7	36.3	42.5	58.8	70.6	88.2	107.5	125.0	142.5	160.0	176.2	212.5	250.0	287.5	337.5	431.2	512.4	575.0	718.7
		Make-up water (Approx.)	m^3/ hr	0.1	0.1	0.2	0.2	0.3	0.3	0.4	0.5	0.6	0.8	1.0	1.3	1.5	1.8	2.0	2.3	2.5	3.0	3.6	4.1	4.8	6.2	7.3	8.2	10.3
	Air flow rate (Approx.)		m^3/ min	70	85	140	160	230	280	330	420	450	700	830	950	1150	1200	1250	1600	1750	2000	2200	2450	2700	3500	3750	5000	5400
	Hot water temperature		℃	37																								
	Cold water temperature		℃	32																								
Overall Dimension	Diameter		mm	920	1160	1160	1490	1660	1660	1890	1890	2100	2100	2900	2900	2900	3310	3310	3960	3960	4360	4760	4760	5600	6600	6600	7600	7600
	Height (H)		mm	1755	1620	1870	1945	1885	2145	2220	2220	2340	2515	3060	3260	3260	3450	3600	3920	3920	3990	4195	4255	4590	5310	5510	5660	5860
	Height (w/o motor) (m)		mm	1530	1395	1645	1760	1720	1785	1860	1860	1980	2155	2590	2790	2790	2880	3030	3300	3300	3290	3495	3495	3830	4470	4670	4720	4940
Material	Air inlet mesh			PVC																								
	Basin			FRP																								
	Casing			FRP																								
	Eliminator			FRP																								
	Fan			ABS Plastic					Aluminium alloy																FRP			
	Filler			PVC																								
	Motor support			Steel (Hot-dip galvanized)																								
	Sprinkler head			ABS Plastic										Aluminium alloy														
	Sprinkler pipe			PVC pipe																								
	Stand pipe			PVC pipe																								
	Structure			Steel (Hot-dip galvanized)																								
	Splash mat			Nylon																								
Fan	TYPE			Axial-flow																								
	Diameter		mm	640		770			930			1200		1500			1800		2400				3000		3400		3700	
	Speed		rpm	750					600			500		440			375						314		257			
	Driven type			Direct driven										Belt driven											Gear driven			
Motor	TYPE			Totally enclosed fan cooled outdoor 3 phase induction motor																								
	Power source			380V / 3 / 50Hz																								
	Rated output		kw	0.2		0.37			1.1			1.5		3.7					5.5		7.5		11		15		22	
	No of pole		Pole	8					10			12		4														
Distribution System	TYPE			Automatic sprinkler system																								
	Inlet dia		mm	40	50		80					100		125		150			200					250			300	
	Outlet dia			15	20		40							65					75				100		75		100	
	No of outlet			4								6		4					6						8		10	
Piping	Inlet		mm	40	50		80					100		125		150			200					250			300	
	Outlet		mm	40	50		80					100		125		150			200					250			300	
	Drain		mm	25										50					80				100					
	Overflow		mm	25										50					80				100					
	Float valve		mm	15										20			25		32					50			80	
	Manual make-up		mm	15											20		25		32					50			80	
Weight	Dry weight		Kg	80	85	100	125	145	240	280	290	380	400	600	640	680	970	1000	1400	1450	1700	1920	2250	2650	4250	4350	5100	5300
	Operating weight		Kg	160	205	220	290	375	470	625	635	970	990	1700	1740	1780	2270	2300	2800	2850	3500	3920	4250	6350	9650	9750	12300	12500
Noise Level	Sound pressure level		dBA	40	41	42.5	43.5	44.5	46	47	48	48	49.5	52	52.5	53	54	54.5	55	55	56	57	58	60	62	62.5	65	66

GUARANTEE:

All components are guaranteed against defective material for a period of one (1) year.

When return to RYOWO with transportation prepaid , all parts found by factory inspection to be defective will be repaired replaced without charge , FOB HONG KONG.

No liability will be assumed for loss or damage resulting from misuse of products.

APPLICATION

For inquiry on RYOWO cooling towers , please contact local agents and specify the following conditions:

a). Circulating water flow
b). Inlet water temperature
c). outlet water temperature
d). ambient wet bulb temperature
e). power sources-voltage & frequency

TOWER FOUNDATION

FT-8 10 FT/LN-8 FT-15·20 FT/LN-10 15 FT-25 FT/LN-20 FT-30 40 FT/LN-25 30

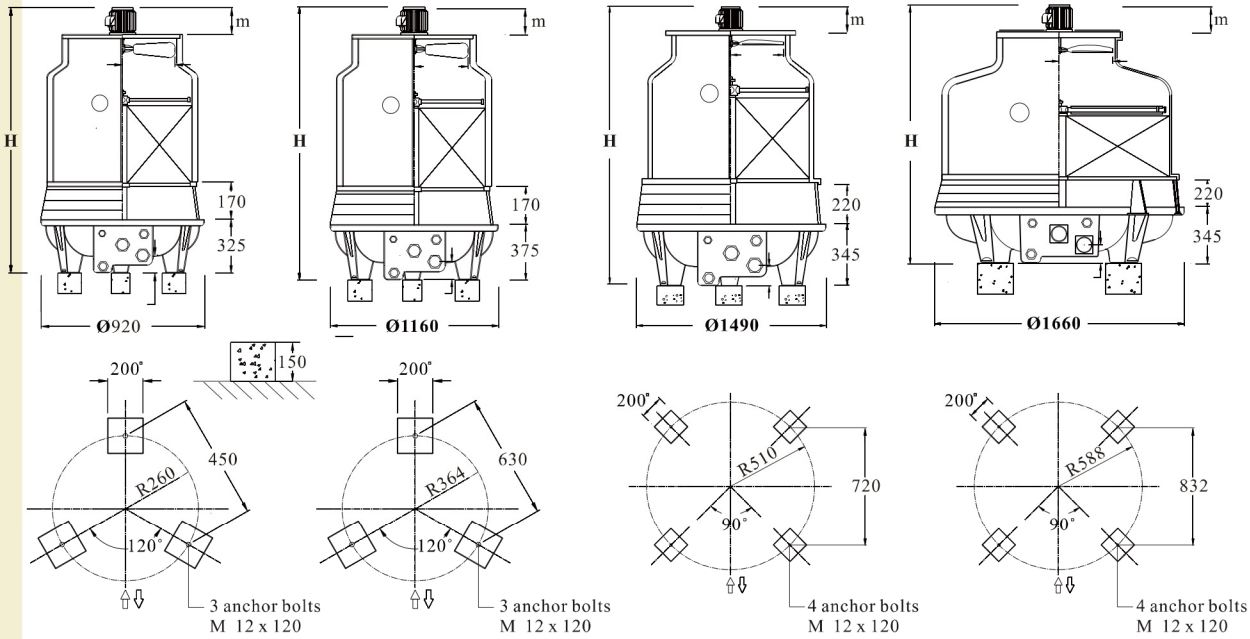

FT-50 FT/LN-40·50 FT · FT/LN-60·80 FT · FT/LN-100 · 125·150

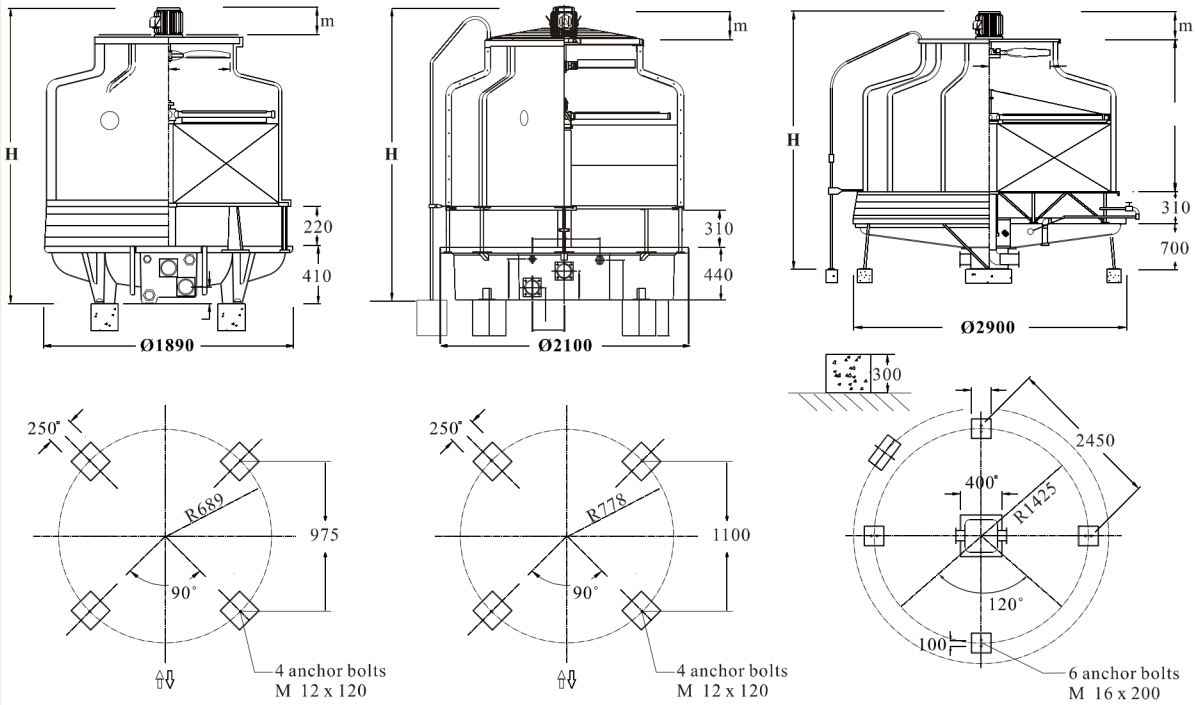

TOWER FOUNDATION

FT· FT/LN-175· 200

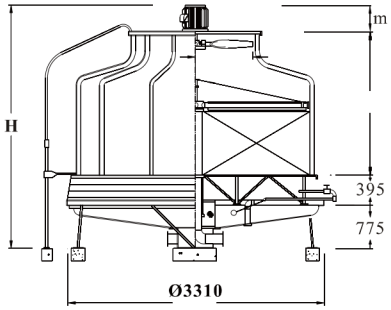

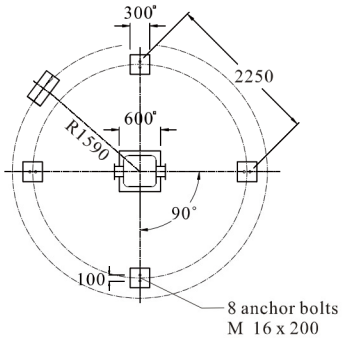

FT· FT/LN-225·250

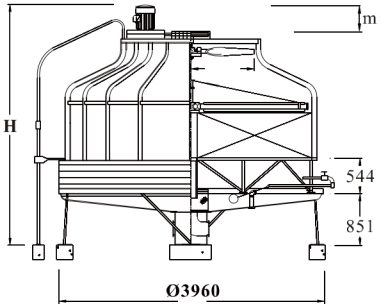

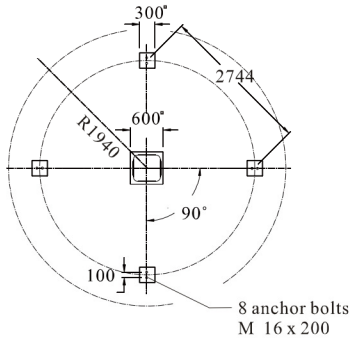

FT· FT/LN-(300) ·350·400

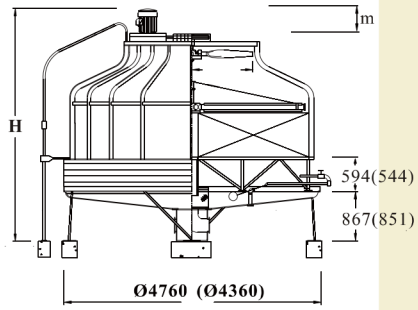

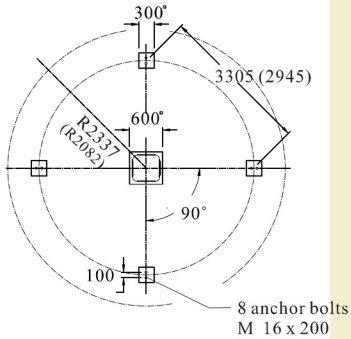

FT· FT/LN- 500

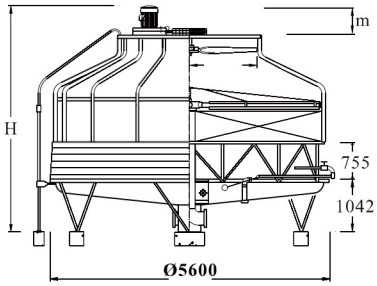

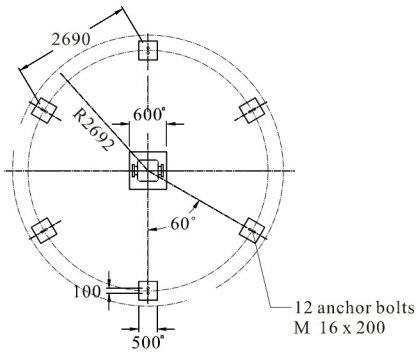

FT· FT/LN-600 · 700

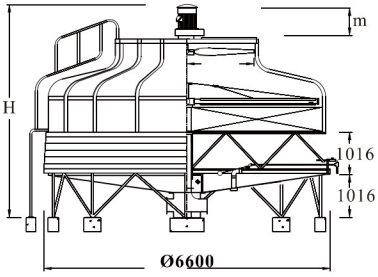

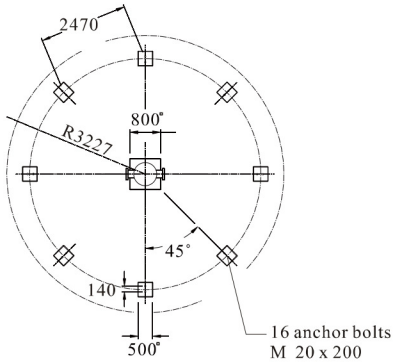

FT· FT/LN-800 · 1000

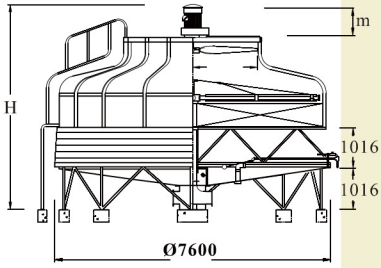

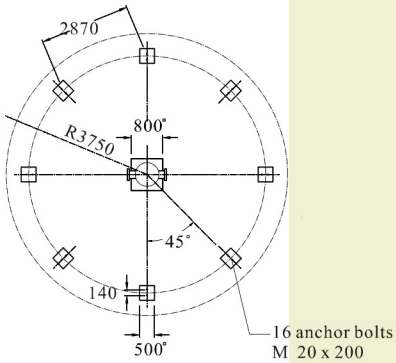

AVAILABLE OPTIONAL ACCESSORIES

DISCHARGE HOOD

This option is available on small models. It provides another direction of discharge air leaving the tower. It is made of F.R.P. with services door and wiring mesh on the air outlet.

HIGH TEMPERATURE FILLER

For high temperature operation such as waste water treatment , P.P. filler can withstand up to 80℃inlet water. (Special arrangement should be made for other components, please contact us for details.)

STAINLESS STEEL COMPONENTS

As an option, we can provide type 304 stainless steel major steel members, bolts and nuts.

TWO-SPEED MOTOR

As an option, two-speed motor can be provided in 4P/6P single winding configeration. A considerable reduction in noise and energy management can be achieved.

F.R.P. AIR INLET LOUVER

Inlet louver constructed of F.R.P. material can be provided, which matches the rest of tower and prevents water splashing out from the tower.

BASIN HEATERS

Electric immersion heaters with thermostat and control box are available to keep the basin water from freezing in sub-zero weather.

BODY COLOR

Cooling tower installed on the roof of building may be barely noticeable from the ground, and a colored cooling tower matching to building color will make it "good look".

JOB REFERENCES

FT-400 X 2
Bank of China, Shen Zhen

FT/LN-600 X 11
Hotel Lisboa, Macau

FT/LN-300 X 6
Hong Kong University

FT-1000 X 3
FT-500 X 10
CITIC Plaza, Guangzhou

FT-200 X 2
Miami University, U.S.A

RYOWO (HOLDING) CO .,LTD.

Rm. 1218, Angyle Centre 1,
688 Nathan Rd., MongKok,
Kowloon, Hong Kong

Tel : (852) 23918381
Fax: (852) 27893802

Http://www.ryowo.com
e-mail: ryinfo@ryowo.com

DONGGUAN RYOWO COOLING TOWER CO., LTD.

No.263 MeiJing Road West,Dalang,Dongguan,Guangdong,PRC

Tel : (86)-769 89399698 (86)-769 89399699
Fax: (86)-769 82973398 Postal Code: 523795

COOLING TOWER MANUFACTURER SINCE 1978

BROCH -EN-(03)-2013

Extract of Carrier HVAC Catalogue

30RBM/30RBP

Nominal cooling capacity 164-528 kW

greenspeed AQUASNAP

High full and part-load efficiency

Compact and simple to install

Low sound level

Very low refrigerant charge

Superior reliability

The AquaSnap liquid chillers are the best value solution for commercial and industrial applications where installers, consultants and building owners require reduced installed costs, optimal performances and maximum quality.

The new generation AquaSnap features two new versions:

- The AquaSnap (30RBM) version features a compact all-in-one package optimised for full-load applications where reduced investment cost (low Capex) is required. For cold or hot climates, the AquaSnap can be equipped with specific options to operate from -20 °C up to 52 °C.
- The AquaSnap Greenspeed® (30RBP) version features a compact all-in-one package optimised for part-load applications where high ESEER/IPLV are required. The AquaSnap Greenspeed® equipped with variable speed condenser fans and variable speed pump provides premium part load efficiency to reduce utility costs over the lifespan of the chiller. Additionally, the low sounds levels achieved at part load conditions can be very beneficial for sensitive acoustic applications. Besides operating efficiently and quietly, AquaSnap Greenspeed® operates from -20 °C up to 48 °C as standard.

The AquaSnap liquid chillers are designed to meet current and future Ecodesign and F-Gas European regulation requirements in terms of energy efficiency and reduced CO_2 emissions. They use the best technologies available today:

- Reduced refrigerant charge of non-ozone depleting refrigerant R-410A
- Scroll compressors
- Greenspeed® variable-speed driven fans (30RBP models)
- Novation® micro-channel heat exchangers with new aluminum alloy

- Brazed plate heat exchangers with reduced water pressure drops
- Auto-adaptive microprocessor control with Greenspeed® intelligence
- Touch Pilot control with web connectivity possibilities and colour touch screen user display
- Extra energy savings through multiple options: Direct-expansion free cooling system on one or two circuits, hydronic free-cooling system, partial or total heat recovery.

Both AquaSnap versions can be equipped with an integrated hydronic module, limiting the installation to straight-forward operations like connection of the power supply and the chilled water supply and return piping (plug & play), within the dimensions of the standard unit.

Recommended by Carrier, the AquaSnap can be equipped with one or two Greenspeed® variable-speed pumps to save significant pumping energy cost (more than two-thirds), ensure tighter water flow control, and improved overall system reliability.

For operation in the most stringent environments that cumulates high temperature, dusts and sand, the AquaSnap (30RBM) can be equipped with optional IP54 electrical box and cabinet fan to operate up to 52 °C outside air temperature.

Physical data

EUROVENT CERTIFIED PERFORMANCE www.eurovent-certification.com

30RBM		160	180	200	220	260	300	330	360	400	430	470	520
Cooling													
Air conditioning application as per EN14511-3:2013† - standard unit													
Nominal cooling capacity	kW	168	181	198	216	261	300	331	365	397	430	464	523
ESEER	kW/kW	4.00	4.07	4.01	4.00	4.00	4.07	4.08	4.10	4.05	4.07	4.04	4.03
EER	kW/kW	3.04	3.12	2.98	2.97	2.90	2.97	2.92	2.95	2.90	2.94	2.90	2.90
Eurovent class cooling		B	A	B	B	B	B	B	B	B	B	B	B
Air conditioning application††- standard unit													
Nominal cooling capacity	kW	168	182	199	216	262	301	331	366	398	431	465	524
ESEER	kW/kW	4.12	4.20	4.16	4.17	4.16	4.20	4.19	4.24	4.17	4.19	4.17	4.17
EER	kW/kW	3.07	3.16	3.02	3.01	2.93	3.00	2.94	2.98	2.93	2.97	2.93	2.93
IPLV	kW/kW	4.57	4.57	4.54	4.51	4.50	4.61	4.61	4.69	4.58	4.62	4.55	4.58
Sound levels													
Standard unit													
Sound power level***	dB(A)	91	92	92	92	92	93	93	93	93	94	94	94
Sound pressure level at 10 m****	dB(A)	59	60	60	60	60	60	60	61	61	62	62	62
Standard unit + option 15*													
Sound power level***	dB(A)	89	90	90	90	90	91	91	92	92	93	93	93
Sound pressure level at 10 m****	dB(A)	57	58	58	58	58	59	59	60	60	61	61	61
Standard unit + option 15LS*													
Sound power level***	dB(A)	85	85	85	86	86							
Sound pressure level at 10 m****	dB(A)	53	53	53	54	54							
Dimensions - standard unit													
Length	mm	2410					3604				4797		
Width	mm	2253					2253				2253		
Height	mm	2297					2297				2297		
Operating Weight **													
Standard unit	kg	1216	1257	1257	1387	1408	1865	1901	2069	2125	2545	2563	2761
Standard unit + option 15*	kg	1299	1339	1340	1495	1516	1991	2027	2212	2269	2707	2726	2941
Standard unit + option 15 + option 116S*	kg	1438	1479	1479	1634	1670	2151	2231	2416	2472	2950	2967	3221

SWL of 92 dB(A) adopted for air-cooled chillers on the rooftop of Hotel Ease Tsuen Wan and Regent Center

† Eurovent-certified performances in accordance with standard EN14511-3:2013.
Cooling mode conditions: Evaporator water entering/leaving temperature 12 °C/7 °C, outside air temperature 35 °C. Evaporator fouling factor 0.00 m². k/W

†† Gross performances, not in accordance with EN14511-3:2013. These performances do not take into account the correction for the proportional heating capacity and power input generated by the water pump to overcome the internal pressure drop in the heat exchanger. Evaporator water entering/leaving temperature 12 °C/7 °C, outside air temperature 35 °C. evaporator fouling factor 0.00 m². k/W

* Options: 15 = Low noise level, 15LS = Very low noise level, 116S = High Pressure dual-pump hydronic module

** Weights are guidelines only. Refer to the unit nameplate.

*** In dB ref=10^{-12} W, (A) weighting. Declared dualnumber noise emission values in accordance with ISO 4871 (with an associated uncertainty of +/-3 dB(A)). Measured in accordance with ISO 9614-1 and certified by Eurovent.

**** In dB ref 20 µPa, (A) weighting. Declared dualnumber noise emission values in accordance with ISO 4871 (with an associated uncertainty of +/-3 dB(A)). For information, calculated from the sound power level Lw(A).

Eurovent certified data

Physical data

30RBM		160	180	200	220	260	300	330	360	400	430	470	520
Compressors		Hermetic scroll 48.3 tr/s											
Circuit A		1	1	1	2	2	2	2	3	3	3	3	4
Circuit B		2	2	2	2	2	3	3	3	3	4	4	4
No. of control stages		3	3	3	4	4	5	5	6	6	7	7	8
Refrigerant - Standard unit**		R410A											
Circuit A	kg	8.40	10.90	10.90	12.60	13.10	14.70	15.40	20.30	21.10	23.50	23.50	26.75
	teqCO_2	17.5	22.8	22.8	26.3	27.4	30.7	32.2	42.4	44.1	49.1	49.1	55.9
Circuit B	kg	12.25	12.60	12.60	12.70	13.10	20.20	20.20	20.40	22.20	26.70	26.80	26.95
	teqCO_2	25.6	26.3	26.3	26.5	27.4	42.2	42.2	42.6	46.4	55.7	56.0	56.3
Capacity control		Pro-Dialog+ Control											
Minimum capacity	%	33	33	33	25	25	20	20	17	17	14	14	13
Condensers		All-aluminium micro-channel heat exchanger (MCHE)											
Fans - Standard unit		Axial Flying Bird 4 with rotating shroud											
Quantity		3	4	4	4	4	5	5	6	6	7	7	8
Maximum total air flow	l/s	13542	18056	18056	18056	18056	22569	22569	27083	27083	31597	31597	36111
Maximum rotation speed	tr/s	16	16	16	16	16	16	16	16	16	16	16	16
Evaporator		Twin-circuit plate heat exchanger											
Water content	l	15	15	15	15	19	27	35	33	42	44	47	53
Max. water-side operating pressure without hydronic module	kPa	3200	3200	3200	3200	3200	3200	3200	3200	3200	3200	3200	3200
Hydronic Module (option)		Pump, Victaulic screen filter, safety valve, water valve and air purge, pressure sensors, expansion tank (option)											
Pump		Centrifugal, monocell, 48.3 r/s, low or high pressure (as required), single or dual pump (as required)											
Expansion tank volume	l	50	50	50	50	50	80	80	80	80	80	80	80
Max. water-side operating pressure with hydronic module	kPa	400	400	400	400	400	400	400	400	400	400	400	400
Water connections with or without hydronic module		Victaulic type											
Diameter	inch	3	3	3	3	3	4	4	4	4	4	4	4
Outside tube diameter	mm	88.9	88.9	88.9	88.9	88.9	114.3	114.3	114.3	114.3	114.3	114.3	114.3
Chassis paint colour		Colour code RAL 7035											

† Eurovent-certified performances in accordance with standard EN14511-3:2013.
Cooling mode conditions: Evaporator water entering/leaving temperature 12 °C/7 °C, outside air temperature 35 °C. Evaporator fouling factor 0.00 m^2. k/W

†† Gross performances, not in accordance with EN14511-3:2013. These performances do not take into account the correction for the proportional heating capacity and power input generated by the water pump to overcome the internal pressure drop in the heat exchanger. Evaporator water entering/leaving temperature 12 °C/7 °C, outside air temperature 35 °C. evaporator fouling factor 0.00 m^2. k/W

* Options: 15 = Low noise level, 15LS = Very low noise level, 116S = High Pressure dual-pump hydronic module

** Weights are guidelines only. Refer to the unit nameplate.

*** In dB ref=10^{-12} W, (A) weighting. Declared dualnumber noise emission values in accordance with ISO 4871 (with an associated uncertainty of +/-3 dB(A)). Measured in accordance with ISO 9614-1 and certified by Eurovent.

**** In dB ref 20 µPa, (A) weighting. Declared dualnumber noise emission values in accordance with ISO 4871 (with an associated uncertainty of +/-3 dB(A)). For information, calculated from the sound power level Lw(A).

Eurovent certified data

Electrical data

30RBM		160	180	200	220	260	300	330	360	400	430	470	520
Power circuit													
Nominal power supply	V-ph-Hz	400 - 3 - 50											
Voltage range	V	360 - 440											
Control circuit supply		24 V via internal transformer											
Nominal unit current draw*													
Circuits A + B	A	100	110	124	133	161	180	201	221	242	261	282	322
Maximum unit power input**													
Circuits A + B	kW	80	87	98	107	129	145	161	177	193	209	225	258
Cosine phi, unit at max. capacity**		0.88	0.87	0.87	0.88	0.88	0.88	0.88	0.88	0.88	0.88	0.88	0.88
Maximum unit current draw (Un-10%)***													
Circuits A + B	A	144	158	176	192	230	259	288	317	345	374	403	460
Maximum unit current draw (Un)****													
Circuits A + B	A	133	146	163	177	212	239	266	292	319	345	372	425
Maximum start-up current, standard unit (Un)†													
Circuits A + B	A	307	356	374	352	423	450	476	503	529	556	583	636
Max. start-up current, unit with soft starter (Un)†													
Circuits A + B	A	261	283	300	305	349	376	403	429	456	482	509	562

* Standardised Eurovent conditions: Evaporator entering/leaving water temperature 12 °C/7 °C, outside air temperature 35 °C.
** Power input, compressors and fans, at the unit operating limits (saturated suction temperature 15 °C, saturated condensing temperature 68.3 °C) and nominal voltage of 400 V (data given on the unit nameplate).
*** Maximum unit operating current at maximum unit power input and 360 V.
**** Maximum unit operating current at maximum unit power input and 400 V (values given on the unit nameplate).
† Maximum instantaneous start-up current at operating limit values (maximum operating current of the smallest compressor(s) + fan current + locked rotor current of the largest compressor).

Fan motor electrical data: Units at Eurovent equivalent conditions and motor ambient air temperature of 50 °C at 400 V: 3.8 A, start-up current 20 A, power input 1.75 kW.

30RBP		160	180	200	220	260	300	330	360	400	430	470	520
Power circuit													
Nominal power supply	V-ph-Hz	400 - 3 - 50											
Voltage range	V	360 - 440											
Control circuit supply		24 V via internal transformer											
Nominal unit current draw*													
Circuits A + B	A	97	107	121	130	158	176	197	216	237	255	276	316
Maximum unit power input**													
Circuits A + B	kW	80	87	98	106	128	144	160	176	192	208	224	256
Cosine phi, unit at max. capacity**		0.88	0.88	0.88	0.88	0.88	0.88	0.88	0.88	0.88	0.88	0.88	0.88
Maximum unit current draw (Un-10%)***													
Circuits A + B	A	142	154	173	189	227	255	284	312	340	369	397	454
Maximum unit current draw (Un)****													
Circuits A + B	A	131	142	160	174	209	235	262	287	314	340	366	419
Maximum start-up current, standard unit (Un)†													
Circuits A + B	A	305	353	371	349	420	446	472	498	525	550	577	629
Max. start-up current, unit with soft starter (Un)†													
Circuits A + B	A	259	279	297	302	346	372	399	424	451	477	503	556

* Standardised Eurovent conditions: Evaporator entering/leaving water temperature 12 °C/7 °C, outside air temperature 35 °C.
** Power input, compressors and fans, at the unit operating limits (saturated suction temperature 15 °C, saturated condensing temperature 68.3 °C) and nominal voltage of 400 V (data given on the unit nameplate).
*** Maximum unit operating current at maximum unit power input and 360 V.
**** Maximum unit operating current at maximum unit power input and 400 V (values given on the unit nameplate).
† Maximum instantaneous start-up current at operating limit values (maximum operating current of the smallest compressor(s) + fan current + locked rotor current of the largest compressor).

Fan motor electrical data upstream variable frequency drive: Units at Eurovent equivalent conditions and motor ambient air temperature of 50 °C at 400 V: 3.0 A, start-up current 20 A, power input 1.75 kW.

Dimensions/clearances

30RBM/30RBP 160-260 (with and without hydronic module)

Unit without hydronic module

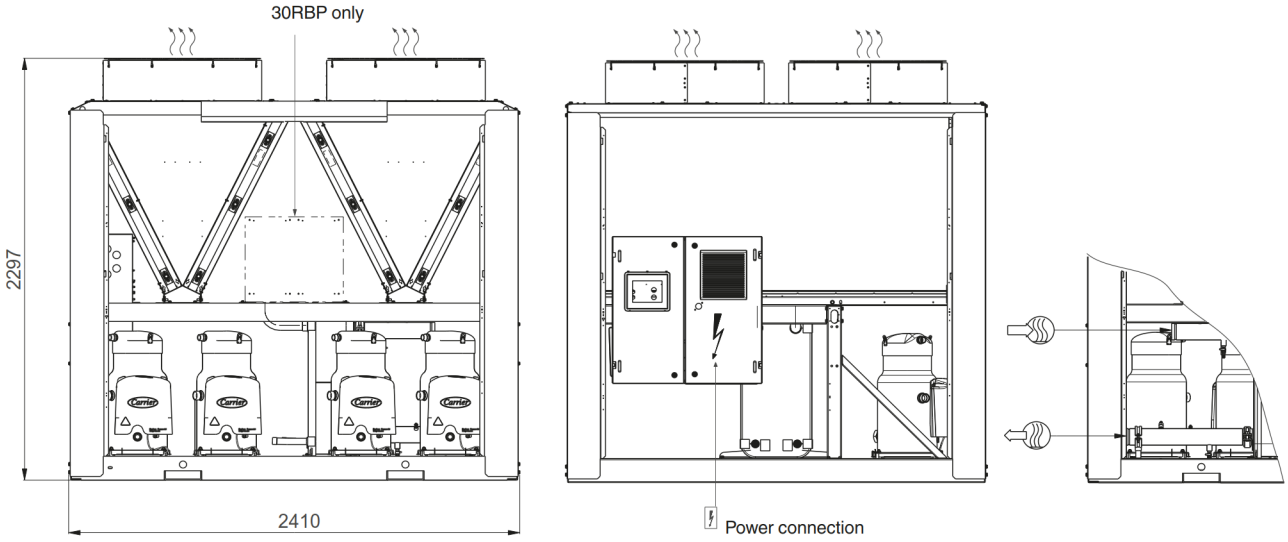

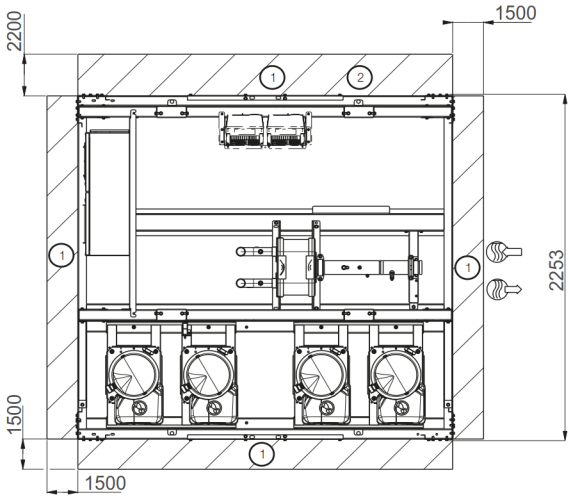

Legend:

All dimensions are in mm.

1 Clearances required for maintenance and air flow

2 Clearances required for removal of coil

Water inlet

Water outlet

Air outlet, do not obstruct

Control box

Note: Drawings are not contractually binding. Before designing an installation, consult the certified dimensional drawings, available on request.

For the positioning of the fixing points, weight distribution points and centre of gravity coordinates please refer to the dimensional drawings.

Unit with hydronic module

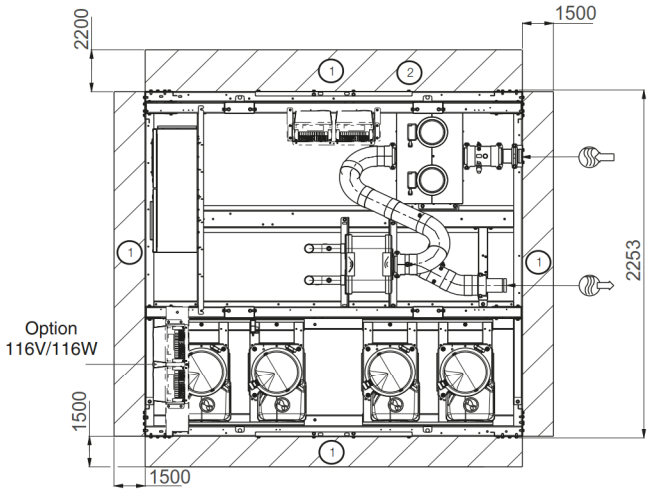

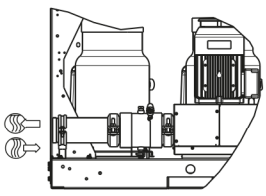

Dimensions/clearances

30RBM/30RBP 300-400 (with and without hydronic module)

Unit without hydronic module

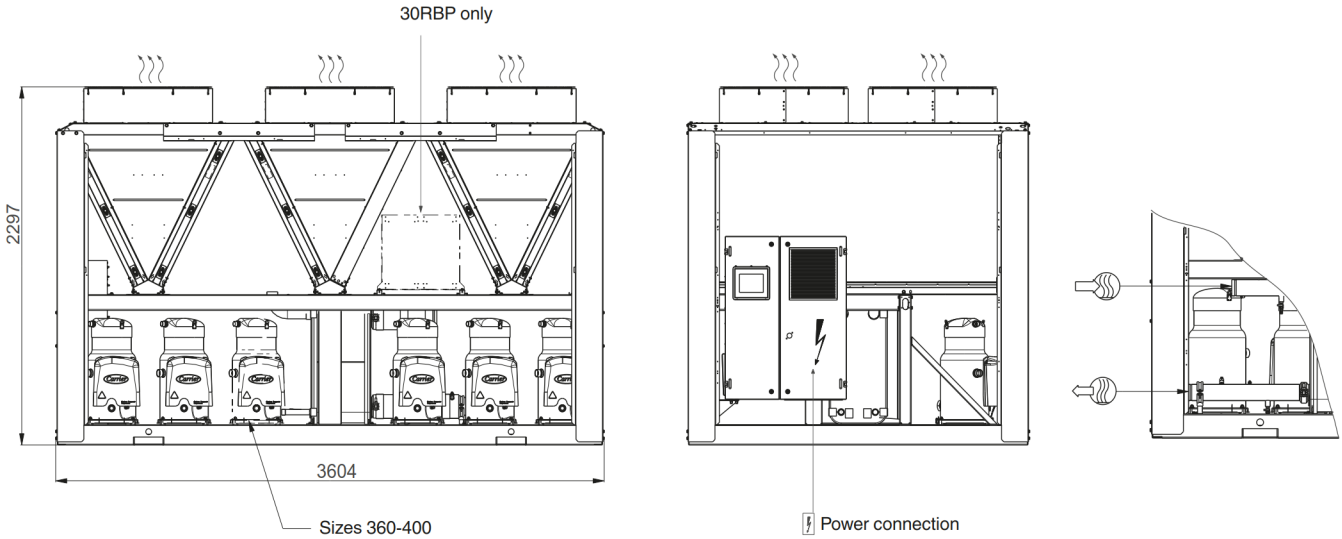

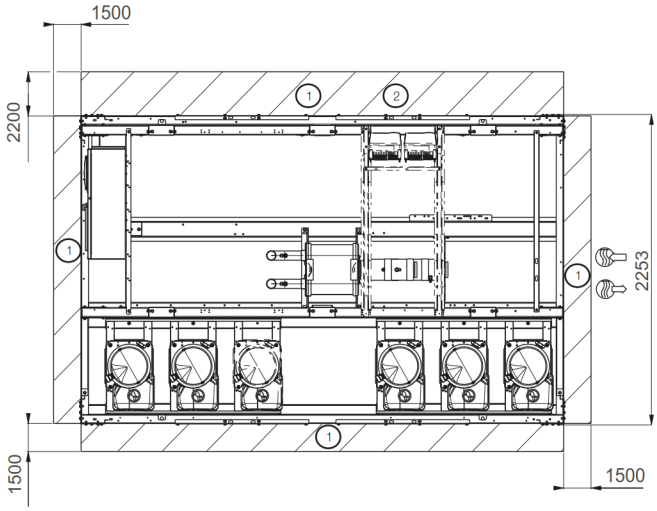

Legend:

All dimensions are in mm.

1 Clearances required for maintenance and air flow

2 Clearances required for removal of coil

Water inlet

Water outlet

Air outlet, do not obstruct

Control box

Note: Drawings are not contractually binding. Before designing an installation, consult the certified dimensional drawings, available on request.

For the positioning of the fixing points, weight distribution points and centre of gravity coordinates please refer to the dimensional drawings.

Unit with hydronic module

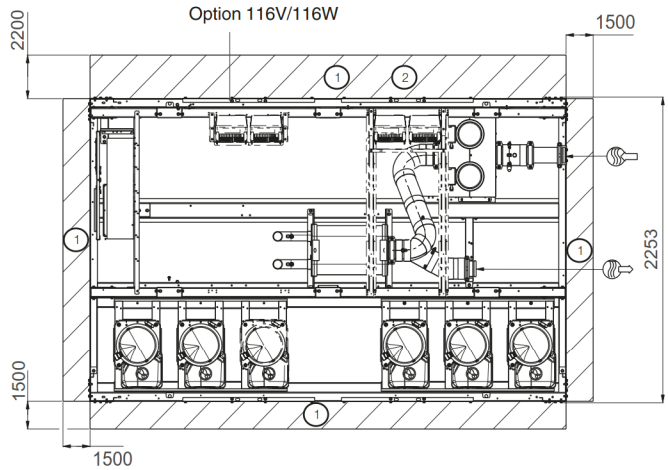

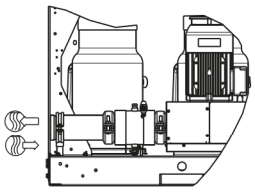

Dimensions/clearances

30RBM/30RBP 430-520 (with and without hydronic module)

Unit without hydronic module

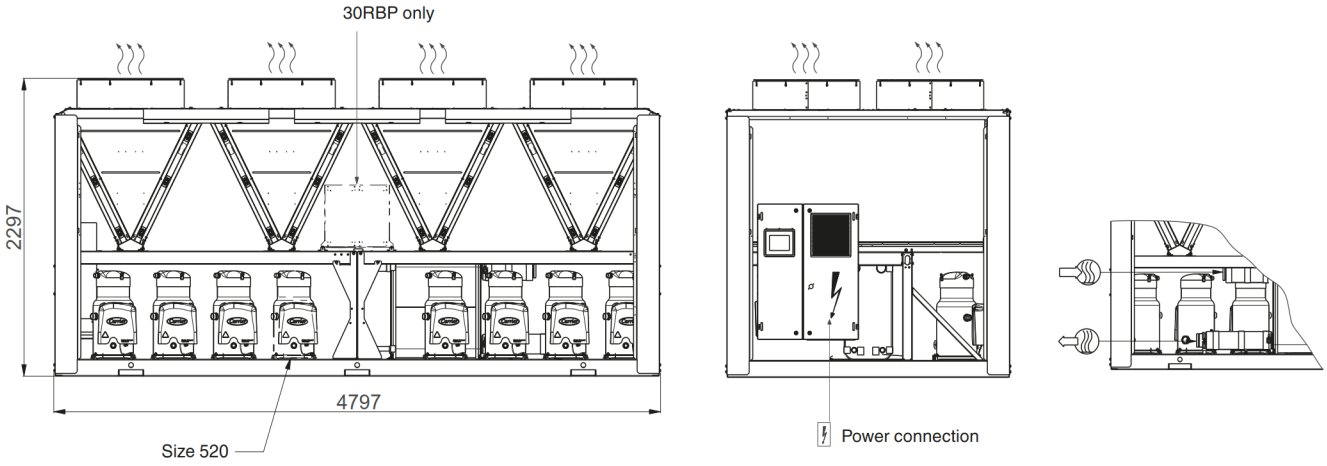

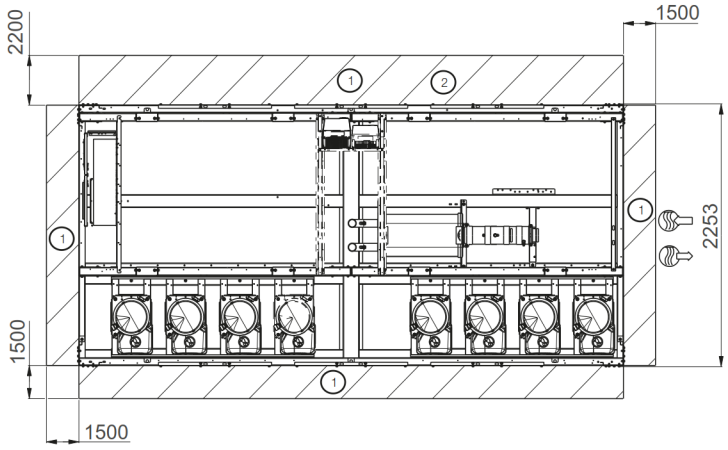

Legend:

All dimensions are in mm.

1 Clearances required for maintenance and air flow

2 Clearances required for removal of coil

Water inlet

Water outlet

Air outlet, do not obstruct

Control box

Note: Drawings are not contractually binding. Before designing an installation, consult the certified dimensional drawings, available on request.

For the positioning of the fixing points, weight distribution points and centre of gravity coordinates please refer to the dimensional drawings.

Unit with hydronic module

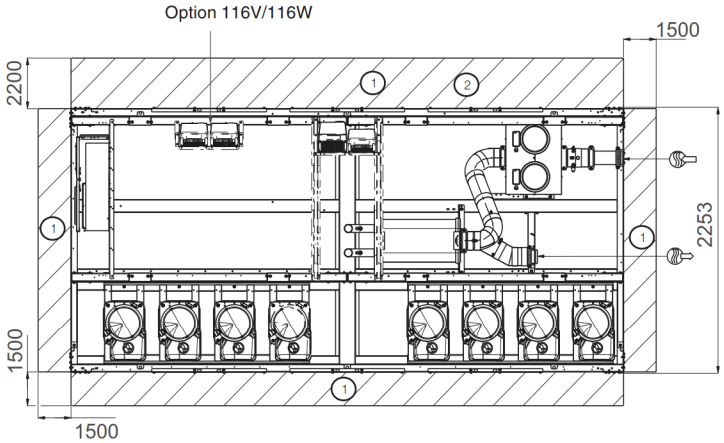

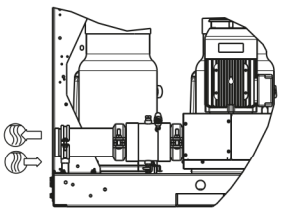

Extract of Trane Air-cooled Chiller Catalogue

Installation, Operation and Maintenance

RTAG Air-Cooled Helical Rotary Liquid Chillers

Models: RTAG
085-440 ton units (50Hz)

572517440002

⚠ SAFETY WARNING

Only qualified personnel should install and service the equipment. The installation, starting up, and servicing of heating, ventilating, and air-conditioning equipment can be hazardous and requires specific knowledge and training. Improperly installed, adjusted or altered equipment by an unqualified person could result in death or serious injury. When working on the equipment, observe all precautions in the literature and on the tags, stickers, and labels that are attached to the equipment.

Nov. 2021 **RTAG-SVX001H-EN**

Dimension

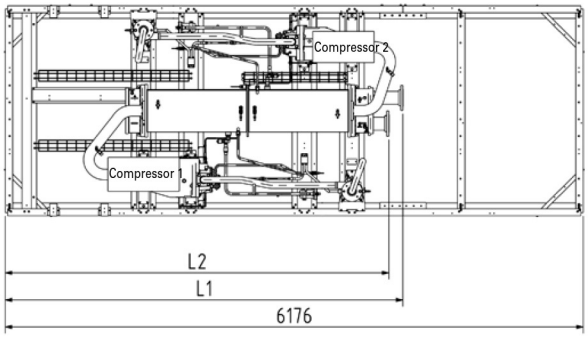

Top View

(With fan/coil removed)

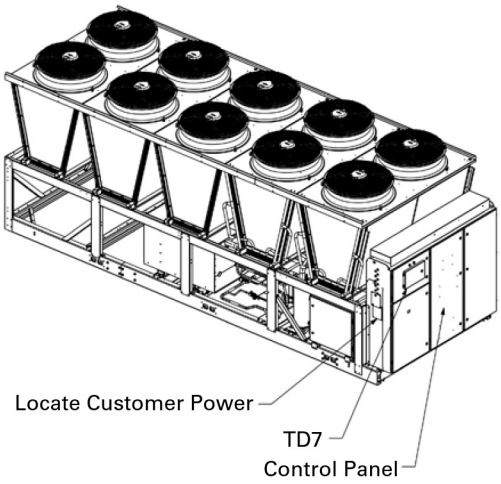

ISO View

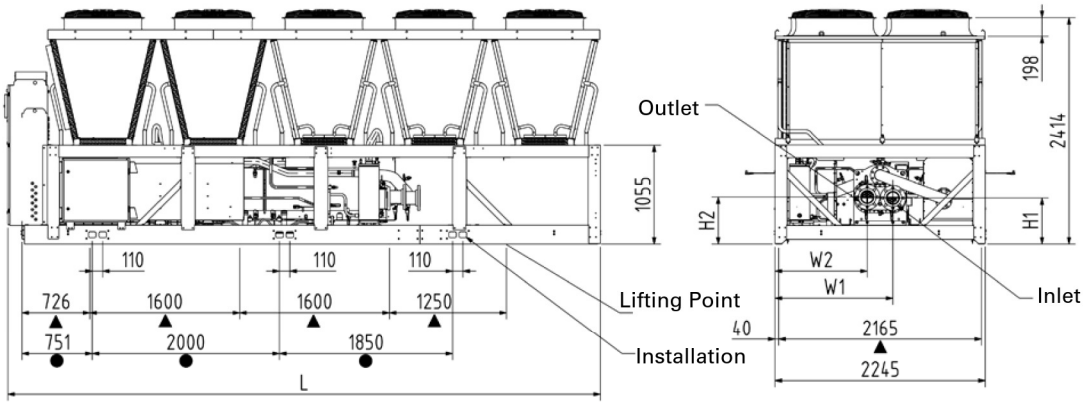

▲ Installation Point
● Lifting Point

Side View **Back View**

		H1 (mm)	H2 (mm)	W1 (mm)	W2 (mm)	L1 (mm)	L2 (mm)	Water pipe	L (Extra eff) (High eff)	L (Premium seasonal eff)
RTAG125X	150PSI	492	500	1260	985	3905	3905	5″	6200	6330
RTAG125P	300PSI	492	500	1260	985	4249	4099	5″	6200	6330
RTAG145X	150PSI	492	500	1260	985	3905	3905	5″	6200	6330
RTAG145P	300PSI	492	500	1260	985	4249	4099	5″	6200	6330
RTAG155X	150PSI	492	500	1260	985	3905	3905	5″	6200	6330
RTAG155P	300PSI	492	500	1260	985	4249	4099	5″	6200	6330
RTAG170X	150PSI	450	465	1275	970	3938	3938	6″	6200	6330
RTAG170P	300PSI	450	465	1275	970	4250	4100	6″	6200	6330
RTAG190H	150PSI	450	465	1275	970	3938	3938	6″	6200	6330
RTAG190S	300PSI	450	465	1275	970	4250	4100	6″	6200	6330
RTAG205H	150PSI	450	465	1275	970	3938	3938	6″	6200	6330
RTAG205S	300PSI	450	465	1275	970	4250	4100	6″	6200	6330

Figure 4. Dimension- RTAG 125/145/155/170 Extra/ Premium efficiency unit, 190/205high efficiency unit/standard efficiency unit

Dimension

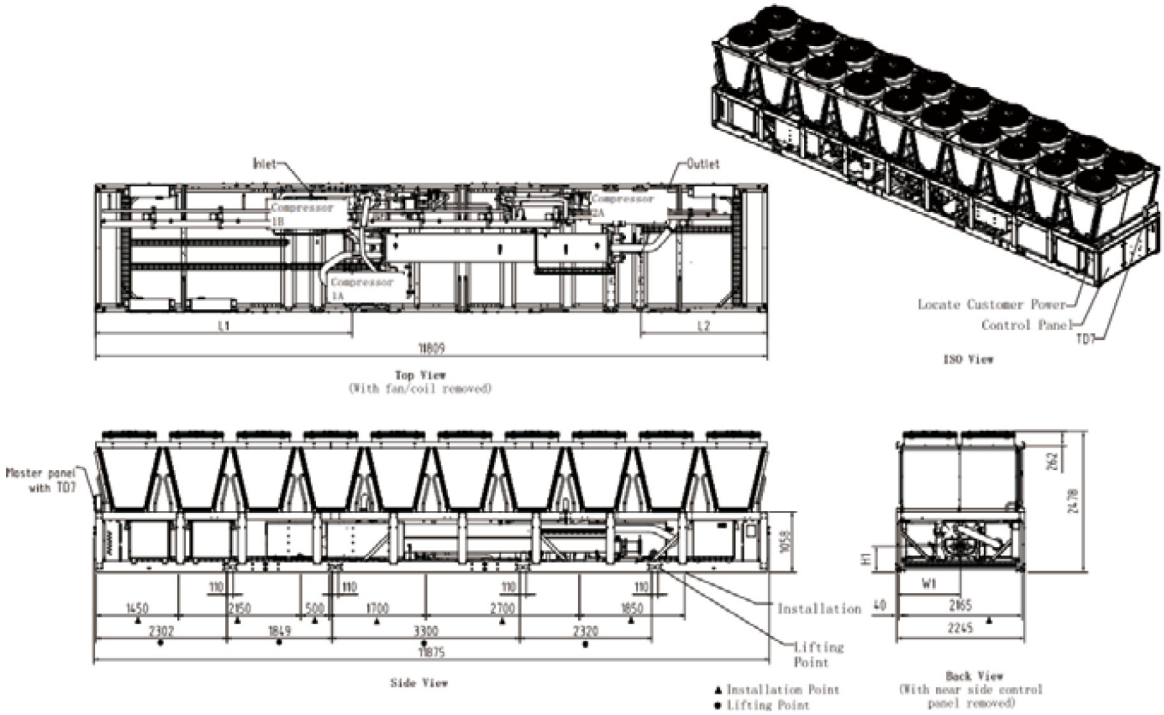

Unit	Water Box	H1 (mm)	W1 (mm)	L1 (mm)	L2 (mm)	Water pipe
340X	150psi	450	1120	4758	2473	6″
	300psi	450	1120	4508	2222	6″

Figure 10. Dimension - RTAG 340 Extra efficiency unit

Air-cooled helical-rotary chillers Series R™

412 - 1451 kW
RTAC

Customer benefits

- Reliability: Trane helical-rotary compressor with only 3 moving parts
- Eurovent certified class A
- Ease of installation: wide choice of hydraulic modules
- Reliability: main components designed and manufactured by Trane
- Advanced Adaptive Control™ to keep chiller online in extren
- Optio
  Servic
- Single power supply connection
- Exact load matching

Main features

- Rental crash frame
- Integral hydraulic module (pumps)
- Compact design: reduced footprint and low profile design
- Falling film evaporator - high COP
- Two acoustic packages: SN and LN
- Wide operating map: airside and waterside
- Easy customized couple connec

SWL of 92 dB(A) adopted for air-cooled chillers (S29-S30) on the rooftop of Asia Trade Center

SWL of 97 dB(A) adopted for air-cooled chillers (S31-S34) on the rooftop of Asia Trade Center

Chiller model	RTAC 120	RTAC 200	RTAC 300	RTAC 400
Cooling capacity	412	737	1077	1451
Power input (kW)	135	232.90	370	498
Refrigerant type	R134a	13	R134a	R134a
Minimum chiller load (%)	30	17	13	10
Qty. of compressors	2	2	3	4
Number of refrigerant circuits	2	2	2	2
Power supply (V/Ph/Hz)	400/3/50	400/3/50	400/3/50	100/3/50
Max. amps (A)	390	562	844	1096
Starting amps (A)	410	594	813	1002
Length (mm)	5041	5960	10058	12244
Width (mm)	2260	2260	2250	2250
Height (mm)	2411	2381	2530	2530
Weight (kg)	4506	5590	9375	11929
Sound pressure level 10 m free field dB(A)	65	68	69	81

Cooling capacity and power input at Eurovent conditions:
12/7°C entering/leaving water temperature and 35°C ambient temperature according to EN 14-511

Trane® is a brand of Ingersoll Rand®. Ingersoll Rand (NYSE:IR) advances the quality of life by creating comfortable, sustainable and efficient environments. Our people and our family of brands—including Ingersoll Rand®, Trane®,
Thermo King® and Club Car® — work together to enhance the quality and comfort of air in homes and buildings; transport and protect food and perishables; and increase industrial productivity and efficiency. We are a global business committed to a world of sustainable progress and enduring results.

We are committed to using environmentally conscious print practices that reduce waste.

APPENDIX 3.2
FIXED NOISE IMPACT ASSESSMENT

Summary of Fixed Noise Calculation

NSR ID	Description	Predicated Fixed Noise Level, dB(A)	Area Sensitivity Rating	Noise Criteria, dB(A)	Compliance
14F_N18	14/F Flat - Bedroom	55	C	70	Yes
14F_N41	14/F Flat - Living Room	57	C	70	Yes
14F_N42	14/F Flat - Living Room	56	C	70	Yes
17F_N17	17/F Flat - Living Room	55	C	70	Yes
17F_N38	17/F Flat - Living Room	57	C	70	Yes
17F_N39	17/F Flat - Living Room	56	C	70	Yes
19F_N17	19/F Flat - Living Room	55	C	70	Yes
19F_N38	19/F Flat - Living Room	56	C	70	Yes
19F_N39	19/F Flat - Living Room	56	C	70	Yes
22F_N17	22/F Flat - Living Room	55	C	70	Yes
22F_N38	22/F Flat - Living Room	56	C	70	Yes
22F_N39	22/F Flat - Living Room	56	C	70	Yes
26F_N15	26/F Flat - Living Room	55	C	70	Yes
26F_N36	26/F Flat - Living Room	56	C	70	Yes
26F_N37	26/F Flat - Living Room	56	C	70	Yes

Summary of Fixed Noise Calculation

NSR ID	14F_N18
Description	14/F Flat - Bedroom
Coor - x	832340
Coor - y	825463
Coor - z	91.2
Noise Criteria, dB(A)	70
Fixed Noise Level at Receiver, dB(A)	55
Compliance	Yes

Source ID	Description	Source coor-x	Source coor-y	Source coor-z	SWL, dB(A)	Horizontal Distance, m	Slant Distance, m	Distance Attenuation, dB(A)	Screening Correction [1], dB(A)	Façade Correction, dB(A)	Predicted Noise Level, $L_{eq(30min)}$, dB(A)
S01	GDS Data Centre - Cooling Tower	832181	825499	146.7	95	163	172	-52.7	-10	3	35
S02	GDS Data Centre - Cooling Tower	832187	825501	146.7	95	157	167	-52.4	-10	3	36
S03	GDS Data Centre - Cooling Tower	832194	825503	146.7	95	151	161	-52.1	-10	3	36
S04	GDS Data Centre - Cooling Tower	832201	825506	146.7	95	146	156	-51.9	-10	3	36
S05	GDS Data Centre - Cooling Tower	832208	825508	146.7	95	140	151	-51.6	-10	3	36
S06	GDS Data Centre - Cooling Tower	832214	825511	146.7	95	135	146	-51.3	-10	3	37
S07	Hotel Ease Tsuen Wan - Air-cooled Chiller	832186	825475	104.9	92	154	155	-51.8	0	3	43
S08	Hotel Ease Tsuen Wan - Air-cooled Chiller	832190	825477	104.9	92	151	152	-51.6	0	3	43
S09	Hotel Ease Tsuen Wan - Air-cooled Chiller	832194	825476	104.9	92	147	147	-51.4	0	3	44
S10	Kwai Wu Industrial Building - Cooling Tower	832244	825480	99.3	86	98	98	-47.8	0	3	41
S11	Kwai Wu Industrial Building - Cooling Tower	832244	825477	99.3	86	97	97	-47.7	0	3	41
S12	Silka Tsuen Wan Hotel - Cooling Tower	832364	825551	88.9	91	91	92	-47.2	-10	3	37
S13	Silka Tsuen Wan Hotel - Cooling Tower	832372	825551	88.9	91	94	94	-47.4	-10	3	37
S14	iTech Tower 2 - Cooling Tower	832113	825386	116.0	94	239	241	-55.6	-10	3	31
S15	iTech Tower 2 - Cooling Tower	832115	825382	116.0	94	239	240	-55.6	-10	3	31
S16	iTech Tower 2 - Cooling Tower	832121	825389	116.0	94	231	232	-55.3	-10	3	32
S17	iTech Tower 2 - Cooling Tower	832117	825376	116.0	94	239	240	-55.6	-10	3	31
S18	iTech Tower 2 - Cooling Tower	832119	825373	116.0	94	239	240	-55.6	-10	3	31
S19	iTech Tower 2 - Cooling Tower	832123	825380	116.0	94	233	234	-55.4	-10	3	32
S20	iTech Tower 2 - Cooling Tower	832125	825376	116.0	94	232	233	-55.4	-10	3	32
S21	Regent Centre - Air-cooled Chiller	832242	825389	127.6	92	123	128	-50.1	-10	3	35
S22	Regent Centre - Air-cooled Chiller	832249	825390	127.6	92	116	122	-49.7	-10	3	35
S23	Regent Centre - Air-cooled Chiller	832251	825356	130.0	92	139	144	-51.2	-10	3	34
S24	Regent Centre - Air-cooled Chiller	832258	825357	130.0	92	133	139	-50.9	-10	3	34
S25	Tung Tak Center - Cooling Tower	832237	825556	75.8	91	139	140	-50.9	0	3	43
S26	Tung Tak Center - Cooling Tower	832235	825562	75.8	91	145	146	-51.3	0	3	43
S27	Tung Tak Center - Cooling Tower	832233	825567	75.8	91	150	151	-51.6	0	3	42
S28	Tung Tak Center - Cooling Tower	832230	825573	75.8	91	155	156	-51.9	0	3	42
S29	Asia Trade Center - Air-cooled Chiller	832142	825650	180.9	93	272	287	-57.2	0	3	39
S30	Asia Trade Center - Air-cooled Chiller	832176	825694	180.9	93	284	298	-57.5	0	3	39
S31	Asia Trade Center - Air-cooled Chiller	832147	825656	180.9	97	273	288	-57.2	0	3	43
S32	Asia Trade Center - Air-cooled Chiller	832150	825661	180.9	97	274	289	-57.2	0	3	43
S33	Asia Trade Center - Air-cooled Chiller	832168	825683	180.9	97	280	294	-57.4	0	3	43
S34	Asia Trade Center - Air-cooled Chiller	832172	825688	180.9	97	282	296	-57.4	0	3	43
										Total	**55**

Note:
[1] -5 dB(A) for partial screening or -10 dB(A) for complete screening due to various architectural features/ topography/ obstacles/ purpose-built noise barrier/ parapet wall, if any.

Summary of Fixed Noise Calculation

NSR ID	14F_N41
Description	14/F Flat - Living Room
Coor - x	832379
Coor - y	825499
Coor - z	91.2
Noise Criteria, dB(A)	70
Fixed Noise Level at Receiver, dB(A)	57
Compliance	Yes

Source ID	Description	Source coor-x	Source coor-y	Source coor-z	SWL, dB(A)	Horizontal Distance, m	Slant Distance, m	Distance Attenuation, dB(A)	Screening Correction [1], dB(A)	Façade Correction, dB(A)	Predicted Noise Level, $L_{eq(30min)}$, dB(A)
S01	GDS Data Centre - Cooling Tower	832181	825499	146.7	95	198	205	-54.3	-10	3	34
S02	GDS Data Centre - Cooling Tower	832187	825501	146.7	95	191	199	-54.0	-10	3	34
S03	GDS Data Centre - Cooling Tower	832194	825503	146.7	95	184	193	-53.7	-10	3	34
S04	GDS Data Centre - Cooling Tower	832201	825506	146.7	95	178	186	-53.4	-10	3	35
S05	GDS Data Centre - Cooling Tower	832208	825508	146.7	95	171	180	-53.1	-10	3	35
S06	GDS Data Centre - Cooling Tower	832214	825511	146.7	95	165	174	-52.8	-10	3	35
S07	Hotel Ease Tsuen Wan - Air-cooled Chiller	832186	825475	104.9	92	194	194	-53.8	-10	3	31
S08	Hotel Ease Tsuen Wan - Air-cooled Chiller	832190	825477	104.9	92	190	191	-53.6	-10	3	31
S09	Hotel Ease Tsuen Wan - Air-cooled Chiller	832194	825476	104.9	92	186	187	-53.4	-10	3	32
S10	Kwai Wu Industrial Building - Cooling Tower	832244	825480	99.3	86	136	136	-50.7	-10	3	28
S11	Kwai Wu Industrial Building - Cooling Tower	832244	825477	99.3	86	136	137	-50.7	-10	3	28
S12	Silka Tsuen Wan Hotel - Cooling Tower	832364	825551	88.9	91	54	54	-42.6	0	3	51
S13	Silka Tsuen Wan Hotel - Cooling Tower	832372	825551	88.9	91	52	52	-42.3	0	3	52
S14	iTech Tower 2 - Cooling Tower	832113	825386	116.0	94	289	290	-57.2	-10	3	30
S15	iTech Tower 2 - Cooling Tower	832115	825382	116.0	94	288	289	-57.2	-10	3	30
S16	iTech Tower 2 - Cooling Tower	832121	825389	116.0	94	280	281	-57.0	-10	3	30
S17	iTech Tower 2 - Cooling Tower	832117	825376	116.0	94	289	290	-57.3	-10	3	30
S18	iTech Tower 2 - Cooling Tower	832119	825373	116.0	94	289	290	-57.2	-10	3	30
S19	iTech Tower 2 - Cooling Tower	832123	825380	116.0	94	283	284	-57.1	-10	3	30
S20	iTech Tower 2 - Cooling Tower	832125	825376	116.0	94	282	283	-57.0	-10	3	30
S21	Regent Centre - Air-cooled Chiller	832242	825389	127.6	92	176	179	-53.1	-10	3	32
S22	Regent Centre - Air-cooled Chiller	832249	825390	127.6	92	169	173	-52.8	-10	3	32
S23	Regent Centre - Air-cooled Chiller	832251	825356	130.0	92	192	196	-53.8	-10	3	31
S24	Regent Centre - Air-cooled Chiller	832258	825357	130.0	92	186	190	-53.6	-10	3	31
S25	Tung Tak Center - Cooling Tower	832237	825556	75.8	91	153	154	-51.7	0	3	42
S26	Tung Tak Center - Cooling Tower	832235	825562	75.8	91	157	158	-52.0	0	3	42
S27	Tung Tak Center - Cooling Tower	832233	825567	75.8	91	161	162	-52.2	0	3	42
S28	Tung Tak Center - Cooling Tower	832230	825573	75.8	91	166	166	-52.4	0	3	42
S29	Asia Trade Center - Air-cooled Chiller	832142	825650	180.9	93	280	294	-57.4	0	3	39
S30	Asia Trade Center - Air-cooled Chiller	832176	825694	180.9	93	281	295	-57.4	0	3	39
S31	Asia Trade Center - Air-cooled Chiller	832147	825656	180.9	97	280	294	-57.4	0	3	43
S32	Asia Trade Center - Air-cooled Chiller	832150	825661	180.9	97	280	294	-57.4	0	3	43
S33	Asia Trade Center - Air-cooled Chiller	832168	825683	180.9	97	280	294	-57.4	0	3	43
S34	Asia Trade Center - Air-cooled Chiller	832172	825688	180.9	97	281	295	-57.4	0	3	43
										Total	**57**

Note:
[1] -5 dB(A) for partial screening or -10 dB(A) for complete screening due to various architectural features/ topography/ obstacles/ purpose-built noise barrier/ parapet wall, if any.

Summary of Fixed Noise Calculation

NSR ID	14F_N42
Description	14/F Flat - Living Room
Coor - x	832330
Coor - y	825500
Coor - z	91.2
Noise Criteria, dB(A)	70
Fixed Noise Level at Receiver, dB(A)	56
Compliance	Yes

Source ID	Description	Source coor-x	Source coor-y	Source coor-z	SWL, dB(A)	Horizontal Distance, m	Slant Distance, m	Distance Attenuation, dB(A)	Screening Correction [1], dB(A)	Façade Correction, dB(A)	Predicted Noise Level, $L_{eq(30min)}$, dB(A)
S01	GDS Data Centre - Cooling Tower	832181	825499	146.7	95	149	159	-52.0	-10	3	36
S02	GDS Data Centre - Cooling Tower	832187	825501	146.7	95	142	153	-51.7	-10	3	36
S03	GDS Data Centre - Cooling Tower	832194	825503	146.7	95	135	146	-51.3	-10	3	37
S04	GDS Data Centre - Cooling Tower	832201	825506	146.7	95	129	140	-50.9	-10	3	37
S05	GDS Data Centre - Cooling Tower	832208	825508	146.7	95	122	134	-50.6	-10	3	37
S06	GDS Data Centre - Cooling Tower	832214	825511	146.7	95	116	129	-50.2	-10	3	38
S07	Hotel Ease Tsuen Wan - Air-cooled Chiller	832186	825475	104.9	92	145	146	-51.3	0	3	44
S08	Hotel Ease Tsuen Wan - Air-cooled Chiller	832190	825477	104.9	92	142	142	-51.1	0	3	44
S09	Hotel Ease Tsuen Wan - Air-cooled Chiller	832194	825476	104.9	92	137	138	-50.8	0	3	44
S10	Kwai Wu Industrial Building - Cooling Tower	832244	825480	99.3	86	88	88	-46.9	0	3	42
S11	Kwai Wu Industrial Building - Cooling Tower	832244	825477	99.3	86	88	89	-46.9	0	3	42
S12	Silka Tsuen Wan Hotel - Cooling Tower	832364	825551	88.9	91	62	62	-43.8	-10	3	40
S13	Silka Tsuen Wan Hotel - Cooling Tower	832372	825551	88.9	91	66	66	-44.4	-10	3	40
S14	iTech Tower 2 - Cooling Tower	832113	825386	116.0	94	245	246	-55.8	-10	3	31
S15	iTech Tower 2 - Cooling Tower	832115	825382	116.0	94	244	246	-55.8	-10	3	31
S16	iTech Tower 2 - Cooling Tower	832121	825389	116.0	94	236	237	-55.5	-10	3	31
S17	iTech Tower 2 - Cooling Tower	832117	825376	116.0	94	246	247	-55.9	-10	3	31
S18	iTech Tower 2 - Cooling Tower	832119	825373	116.0	94	246	247	-55.9	-10	3	31
S19	iTech Tower 2 - Cooling Tower	832123	825380	116.0	94	239	240	-55.6	-10	3	31
S20	iTech Tower 2 - Cooling Tower	832125	825376	116.0	94	239	241	-55.6	-10	3	31
S21	Regent Centre - Air-cooled Chiller	832242	825389	127.6	92	141	146	-51.3	-10	3	34
S22	Regent Centre - Air-cooled Chiller	832249	825390	127.6	92	136	141	-51.0	-10	3	34
S23	Regent Centre - Air-cooled Chiller	832251	825356	130.0	92	164	168	-52.5	0	3	42
S24	Regent Centre - Air-cooled Chiller	832258	825357	130.0	92	160	164	-52.3	0	3	43
S25	Tung Tak Center - Cooling Tower	832237	825556	75.8	91	108	109	-48.8	0	3	45
S26	Tung Tak Center - Cooling Tower	832235	825562	75.8	91	113	114	-49.2	0	3	45
S27	Tung Tak Center - Cooling Tower	832233	825567	75.8	91	118	119	-49.5	0	3	44
S28	Tung Tak Center - Cooling Tower	832230	825573	75.8	91	123	124	-49.9	0	3	44
S29	Asia Trade Center - Air-cooled Chiller	832142	825650	180.9	93	240	256	-56.2	0	3	40
S30	Asia Trade Center - Air-cooled Chiller	832176	825694	180.9	93	248	263	-56.4	0	3	40
S31	Asia Trade Center - Air-cooled Chiller	832147	825656	180.9	97	240	256	-56.2	0	3	44
S32	Asia Trade Center - Air-cooled Chiller	832150	825661	180.9	97	241	257	-56.2	0	3	44
S33	Asia Trade Center - Air-cooled Chiller	832168	825683	180.9	97	244	260	-56.3	0	3	44
S34	Asia Trade Center - Air-cooled Chiller	832172	825688	180.9	97	246	262	-56.4	0	3	44
										Total	**56**

Note:
[1] -5 dB(A) for partial screening or -10 dB(A) for complete screening due to various architectural features/ topography/ obstacles/ purpose-built noise barrier/ parapet wall, if any.

Summary of Fixed Noise Calculation

NSR ID	17F_N17
Description	17/F Flat - Living Room
Coor - x	832344
Coor - y	825461
Coor - z	100.5
Noise Criteria, dB(A)	70
Fixed Noise Level at Receiver, dB(A)	55
Compliance	Yes

Source ID	Description	Source coor-x	Source coor-y	Source coor-z	SWL, dB(A)	Horizontal Distance, m	Slant Distance, m	Distance Attenuation, dB(A)	Screening Correction [1], dB(A)	Façade Correction, dB(A)	Predicted Noise Level, $L_{eq(30min)}$, dB(A)
S01	GDS Data Centre - Cooling Tower	832181	825499	146.7	95	167	173	-52.8	-10	3	35
S02	GDS Data Centre - Cooling Tower	832187	825501	146.7	95	161	168	-52.5	-10	3	36
S03	GDS Data Centre - Cooling Tower	832194	825503	146.7	95	155	162	-52.2	-10	3	36
S04	GDS Data Centre - Cooling Tower	832201	825506	146.7	95	149	156	-51.9	-10	3	36
S05	GDS Data Centre - Cooling Tower	832208	825508	146.7	95	144	151	-51.6	-10	3	36
S06	GDS Data Centre - Cooling Tower	832214	825511	146.7	95	139	146	-51.3	-10	3	37
S07	Hotel Ease Tsuen Wan - Air-cooled Chiller	832186	825475	104.9	92	158	158	-52.0	0	3	43
S08	Hotel Ease Tsuen Wan - Air-cooled Chiller	832190	825477	104.9	92	155	155	-51.8	0	3	43
S09	Hotel Ease Tsuen Wan - Air-cooled Chiller	832194	825476	104.9	92	150	150	-51.5	0	3	43
S10	Kwai Wu Industrial Building - Cooling Tower	832244	825480	99.3	86	101	101	-48.1	0	3	41
S11	Kwai Wu Industrial Building - Cooling Tower	832244	825477	99.3	86	100	100	-48.0	0	3	41
S12	Silka Tsuen Wan Hotel - Cooling Tower	832364	825551	88.9	91	92	93	-47.3	-10	3	37
S13	Silka Tsuen Wan Hotel - Cooling Tower	832372	825551	88.9	91	94	95	-47.5	-10	3	36
S14	iTech Tower 2 - Cooling Tower	832113	825386	116.0	94	242	243	-55.7	-10	3	31
S15	iTech Tower 2 - Cooling Tower	832115	825382	116.0	94	242	242	-55.7	-10	3	31
S16	iTech Tower 2 - Cooling Tower	832121	825389	116.0	94	234	234	-55.4	-10	3	32
S17	iTech Tower 2 - Cooling Tower	832117	825376	116.0	94	242	243	-55.7	-10	3	31
S18	iTech Tower 2 - Cooling Tower	832119	825373	116.0	94	241	242	-55.7	-10	3	31
S19	iTech Tower 2 - Cooling Tower	832123	825380	116.0	94	235	236	-55.5	-10	3	32
S20	iTech Tower 2 - Cooling Tower	832125	825376	116.0	94	235	235	-55.4	-10	3	32
S21	Regent Centre - Air-cooled Chiller	832242	825389	127.6	92	125	128	-50.1	-10	3	35
S22	Regent Centre - Air-cooled Chiller	832249	825390	127.6	92	118	121	-49.7	-10	3	35
S23	Regent Centre - Air-cooled Chiller	832251	825356	130.0	92	140	143	-51.1	-10	3	34
S24	Regent Centre - Air-cooled Chiller	832258	825357	130.0	92	135	138	-50.8	-10	3	34
S25	Tung Tak Center - Cooling Tower	832237	825556	75.8	91	143	145	-51.2	0	3	43
S26	Tung Tak Center - Cooling Tower	832235	825562	75.8	91	148	150	-51.5	0	3	42
S27	Tung Tak Center - Cooling Tower	832233	825567	75.8	91	153	155	-51.8	0	3	42
S28	Tung Tak Center - Cooling Tower	832230	825573	75.8	91	159	161	-52.1	0	3	42
S29	Asia Trade Center - Air-cooled Chiller	832142	825650	180.9	93	276	287	-57.2	0	3	39
S30	Asia Trade Center - Air-cooled Chiller	832176	825694	180.9	93	287	298	-57.5	0	3	39
S31	Asia Trade Center - Air-cooled Chiller	832147	825656	180.9	97	277	288	-57.2	0	3	43
S32	Asia Trade Center - Air-cooled Chiller	832150	825661	180.9	97	278	289	-57.2	0	3	43
S33	Asia Trade Center - Air-cooled Chiller	832168	825683	180.9	97	283	294	-57.4	0	4	44
S34	Asia Trade Center - Air-cooled Chiller	832172	825688	180.9	97	285	296	-57.4	0	5	45
										Total	**55**

Note:
[1] -5 dB(A) for partial screening or -10 dB(A) for complete screening due to various architectural features/ topography/ obstacles/ purpose-built noise barrier/ parapet wall, if any.

Summary of Fixed Noise Calculation

NSR ID	17F_N38
Description	17/F Flat - Living Room
Coor - x	832379
Coor - y	825499
Coor - z	100.5
Noise Criteria, dB(A)	70
Fixed Noise Level at Receiver, dB(A)	57
Compliance	Yes

Source ID	Description	Source coor-x	Source coor-y	Source coor-z	SWL, dB(A)	Horizontal Distance, m	Slant Distance, m	Distance Attenuation, dB(A)	Screening Correction [1], dB(A)	Façade Correction, dB(A)	Predicted Noise Level, $L_{eq(30min)}$, dB(A)
S01	GDS Data Centre - Cooling Tower	832181	825499	146.7	95	198	203	-54.2	-10	3	34
S02	GDS Data Centre - Cooling Tower	832187	825501	146.7	95	191	197	-53.9	-10	3	34
S03	GDS Data Centre - Cooling Tower	832194	825503	146.7	95	184	190	-53.6	-10	3	34
S04	GDS Data Centre - Cooling Tower	832201	825506	146.7	95	178	184	-53.3	-10	3	35
S05	GDS Data Centre - Cooling Tower	832208	825508	146.7	95	171	178	-53.0	-10	3	35
S06	GDS Data Centre - Cooling Tower	832214	825511	146.7	95	165	172	-52.7	-10	3	35
S07	Hotel Ease Tsuen Wan - Air-cooled Chiller	832186	825475	104.9	92	194	194	-53.7	-10	3	31
S08	Hotel Ease Tsuen Wan - Air-cooled Chiller	832190	825477	104.9	92	190	190	-53.6	-10	3	31
S09	Hotel Ease Tsuen Wan - Air-cooled Chiller	832194	825476	104.9	92	186	186	-53.4	-10	3	32
S10	Kwai Wu Industrial Building - Cooling Tower	832244	825480	99.3	86	136	136	-50.7	-10	3	28
S11	Kwai Wu Industrial Building - Cooling Tower	832244	825477	99.3	86	136	136	-50.7	-10	3	28
S12	Silka Tsuen Wan Hotel - Cooling Tower	832364	825551	88.9	91	54	55	-42.8	0	3	51
S13	Silka Tsuen Wan Hotel - Cooling Tower	832372	825551	88.9	91	52	53	-42.5	0	3	51
S14	iTech Tower 2 - Cooling Tower	832113	825386	116.0	94	289	289	-57.2	-10	3	30
S15	iTech Tower 2 - Cooling Tower	832115	825382	116.0	94	288	289	-57.2	-10	3	30
S16	iTech Tower 2 - Cooling Tower	832121	825389	116.0	94	280	281	-57.0	-10	3	30
S17	iTech Tower 2 - Cooling Tower	832117	825376	116.0	94	289	290	-57.2	-10	3	30
S18	iTech Tower 2 - Cooling Tower	832119	825373	116.0	94	289	289	-57.2	-10	3	30
S19	iTech Tower 2 - Cooling Tower	832123	825380	116.0	94	283	283	-57.0	-10	3	30
S20	iTech Tower 2 - Cooling Tower	832125	825376	116.0	94	282	283	-57.0	-10	3	30
S21	Regent Centre - Air-cooled Chiller	832242	825389	127.6	92	176	178	-53.0	-10	3	32
S22	Regent Centre - Air-cooled Chiller	832249	825390	127.6	92	169	171	-52.7	-10	3	32
S23	Regent Centre - Air-cooled Chiller	832251	825356	130.0	92	192	194	-53.8	-10	3	31
S24	Regent Centre - Air-cooled Chiller	832258	825357	130.0	92	186	189	-53.5	-10	3	31
S25	Tung Tak Center - Cooling Tower	832237	825556	75.8	91	153	155	-51.8	0	3	42
S26	Tung Tak Center - Cooling Tower	832235	825562	75.8	91	157	159	-52.0	0	3	42
S27	Tung Tak Center - Cooling Tower	832233	825567	75.8	91	161	163	-52.3	0	3	42
S28	Tung Tak Center - Cooling Tower	832230	825573	75.8	91	166	168	-52.5	0	3	42
S29	Asia Trade Center - Air-cooled Chiller	832142	825650	180.9	93	280	292	-57.3	0	3	39
S30	Asia Trade Center - Air-cooled Chiller	832176	825694	180.9	93	281	293	-57.3	0	3	39
S31	Asia Trade Center - Air-cooled Chiller	832147	825656	180.9	97	280	291	-57.3	0	3	43
S32	Asia Trade Center - Air-cooled Chiller	832150	825661	180.9	97	280	291	-57.3	0	3	43
S33	Asia Trade Center - Air-cooled Chiller	832168	825683	180.9	97	280	291	-57.3	0	3	43
S34	Asia Trade Center - Air-cooled Chiller	832172	825688	180.9	97	281	292	-57.3	0	3	43
										Total	**57**

Note:
[1] -5 dB(A) for partial screening or -10 dB(A) for complete screening due to various architectural features/ topography/ obstacles/ purpose-built noise barrier/ parapet wall, if any.

Summary of Fixed Noise Calculation

NSR ID	17F_N39
Description	17/F Flat - Living Room
Coor - x	832330
Coor - y	825500
Coor - z	100.5
Noise Criteria, dB(A)	70
Fixed Noise Level at Receiver, dB(A)	56
Compliance	Yes

Source ID	Description	Source coor-x	Source coor-y	Source coor-z	SWL, dB(A)	Horizontal Distance, m	Slant Distance, m	Distance Attenuation, dB(A)	Screening Correction [1], dB(A)	Façade Correction, dB(A)	Predicted Noise Level, $L_{eq(30min)}$, dB(A)
S01	GDS Data Centre - Cooling Tower	832181	825499	146.7	95	149	156	-51.8	-10	3	36
S02	GDS Data Centre - Cooling Tower	832187	825501	146.7	95	142	149	-51.5	-10	3	37
S03	GDS Data Centre - Cooling Tower	832194	825503	146.7	95	135	143	-51.1	-10	3	37
S04	GDS Data Centre - Cooling Tower	832201	825506	146.7	95	129	137	-50.7	-10	3	37
S05	GDS Data Centre - Cooling Tower	832208	825508	146.7	95	122	131	-50.3	-10	3	38
S06	GDS Data Centre - Cooling Tower	832214	825511	146.7	95	116	125	-49.9	-10	3	38
S07	Hotel Ease Tsuen Wan - Air-cooled Chiller	832186	825475	104.9	92	145	145	-51.2	0	3	44
S08	Hotel Ease Tsuen Wan - Air-cooled Chiller	832190	825477	104.9	92	142	142	-51.0	0	3	44
S09	Hotel Ease Tsuen Wan - Air-cooled Chiller	832194	825476	104.9	92	137	137	-50.8	0	3	44
S10	Kwai Wu Industrial Building - Cooling Tower	832244	825480	99.3	86	88	88	-46.9	0	3	42
S11	Kwai Wu Industrial Building - Cooling Tower	832244	825477	99.3	86	88	88	-46.9	0	3	42
S12	Silka Tsuen Wan Hotel - Cooling Tower	832364	825551	88.9	91	62	63	-44.0	-10	3	40
S13	Silka Tsuen Wan Hotel - Cooling Tower	832372	825551	88.9	91	66	67	-44.6	-10	3	39
S14	iTech Tower 2 - Cooling Tower	832113	825386	116.0	94	245	245	-55.8	-10	3	31
S15	iTech Tower 2 - Cooling Tower	832115	825382	116.0	94	244	245	-55.8	-10	3	31
S16	iTech Tower 2 - Cooling Tower	832121	825389	116.0	94	236	237	-55.5	-10	3	32
S17	iTech Tower 2 - Cooling Tower	832117	825376	116.0	94	246	246	-55.8	-10	3	31
S18	iTech Tower 2 - Cooling Tower	832119	825373	116.0	94	246	246	-55.8	-10	3	31
S19	iTech Tower 2 - Cooling Tower	832123	825380	116.0	94	239	240	-55.6	-10	3	31
S20	iTech Tower 2 - Cooling Tower	832125	825376	116.0	94	239	240	-55.6	-10	3	31
S21	Regent Centre - Air-cooled Chiller	832242	825389	127.6	92	141	144	-51.2	-10	3	34
S22	Regent Centre - Air-cooled Chiller	832249	825390	127.6	92	136	139	-50.8	-10	3	34
S23	Regent Centre - Air-cooled Chiller	832251	825356	130.0	92	164	167	-52.4	0	3	43
S24	Regent Centre - Air-cooled Chiller	832258	825357	130.0	92	159	162	-52.2	0	3	43
S25	Tung Tak Center - Cooling Tower	832237	825556	75.8	91	108	111	-48.9	0	3	45
S26	Tung Tak Center - Cooling Tower	832235	825562	75.8	91	113	116	-49.3	0	3	45
S27	Tung Tak Center - Cooling Tower	832233	825567	75.8	91	118	121	-49.6	0	3	44
S28	Tung Tak Center - Cooling Tower	832230	825573	75.8	91	123	126	-50.0	0	3	44
S29	Asia Trade Center - Air-cooled Chiller	832142	825650	180.9	93	240	253	-56.1	0	3	40
S30	Asia Trade Center - Air-cooled Chiller	832176	825694	180.9	93	248	260	-56.3	0	3	40
S31	Asia Trade Center - Air-cooled Chiller	832147	825656	180.9	97	240	253	-56.1	0	3	44
S32	Asia Trade Center - Air-cooled Chiller	832150	825661	180.9	97	241	254	-56.1	0	3	44
S33	Asia Trade Center - Air-cooled Chiller	832168	825683	180.9	97	244	257	-56.2	0	3	44
S34	Asia Trade Center - Air-cooled Chiller	832172	825688	180.9	97	246	259	-56.3	0	3	44
										Total	**56**

Note:
[1] -5 dB(A) for partial screening or -10 dB(A) for complete screening due to various architectural features/ topography/ obstacles/ purpose-built noise barrier/ parapet wall, if any.

Summary of Fixed Noise Calculation

NSR ID	19F_N17
Description	19/F Flat - Living Room
Coor - x	832344
Coor - y	825461
Coor - z	106.6
Noise Criteria, dB(A)	70
Fixed Noise Level at Receiver, dB(A)	55
Compliance	Yes

Source ID	Description	Source coor-x	Source coor-y	Source coor-z	SWL, dB(A)	Horizontal Distance, m	Slant Distance, m	Distance Attenuation, dB(A)	Screening Correction [1], dB(A)	Façade Correction, dB(A)	Predicted Noise Level, $L_{eq(30min)}$, dB(A)
S01	GDS Data Centre - Cooling Tower	832181	825499	146.7	95	167	172	-52.7	-10	3	35
S02	GDS Data Centre - Cooling Tower	832187	825501	146.7	95	161	166	-52.4	-10	3	36
S03	GDS Data Centre - Cooling Tower	832194	825503	146.7	95	155	160	-52.1	-10	3	36
S04	GDS Data Centre - Cooling Tower	832201	825506	146.7	95	149	155	-51.8	-10	3	36
S05	GDS Data Centre - Cooling Tower	832208	825508	146.7	95	144	149	-51.5	-10	3	37
S06	GDS Data Centre - Cooling Tower	832214	825511	146.7	95	139	144	-51.2	-10	3	37
S07	Hotel Ease Tsuen Wan - Air-cooled Chiller	832186	825475	104.9	92	158	158	-52.0	0	3	43
S08	Hotel Ease Tsuen Wan - Air-cooled Chiller	832190	825477	104.9	92	155	155	-51.8	0	3	43
S09	Hotel Ease Tsuen Wan - Air-cooled Chiller	832194	825476	104.9	92	150	150	-51.5	0	3	43
S10	Kwai Wu Industrial Building - Cooling Tower	832244	825480	99.3	86	101	102	-48.1	0	3	41
S11	Kwai Wu Industrial Building - Cooling Tower	832244	825477	99.3	86	100	101	-48.1	0	3	41
S12	Silka Tsuen Wan Hotel - Cooling Tower	832364	825551	88.9	91	92	94	-47.4	-10	3	37
S13	Silka Tsuen Wan Hotel - Cooling Tower	832372	825551	88.9	91	94	95	-47.6	-10	3	36
S14	iTech Tower 2 - Cooling Tower	832113	825386	116.0	94	242	243	-55.7	-10	3	31
S15	iTech Tower 2 - Cooling Tower	832115	825382	116.0	94	242	242	-55.7	-10	3	31
S16	iTech Tower 2 - Cooling Tower	832121	825389	116.0	94	234	234	-55.4	-10	3	32
S17	iTech Tower 2 - Cooling Tower	832117	825376	116.0	94	242	242	-55.7	-10	3	31
S18	iTech Tower 2 - Cooling Tower	832119	825373	116.0	94	241	242	-55.7	-10	3	31
S19	iTech Tower 2 - Cooling Tower	832123	825380	116.0	94	235	236	-55.4	-10	3	32
S20	iTech Tower 2 - Cooling Tower	832125	825376	116.0	94	235	235	-55.4	-10	3	32
S21	Regent Centre - Air-cooled Chiller	832242	825389	127.6	92	125	126	-50.0	-10	3	35
S22	Regent Centre - Air-cooled Chiller	832249	825390	127.6	92	118	120	-49.6	-10	3	35
S23	Regent Centre - Air-cooled Chiller	832251	825356	130.0	92	140	142	-51.1	-10	3	34
S24	Regent Centre - Air-cooled Chiller	832258	825357	130.0	92	135	137	-50.7	-10	3	34
S25	Tung Tak Center - Cooling Tower	832237	825556	75.8	91	143	146	-51.3	0	3	43
S26	Tung Tak Center - Cooling Tower	832235	825562	75.8	91	148	151	-51.6	0	3	42
S27	Tung Tak Center - Cooling Tower	832233	825567	75.8	91	153	156	-51.9	0	3	42
S28	Tung Tak Center - Cooling Tower	832230	825573	75.8	91	159	162	-52.2	0	3	42
S29	Asia Trade Center - Air-cooled Chiller	832142	825650	180.9	93	276	286	-57.1	0	3	39
S30	Asia Trade Center - Air-cooled Chiller	832176	825694	180.9	93	287	296	-57.4	0	3	39
S31	Asia Trade Center - Air-cooled Chiller	832147	825656	180.9	97	277	287	-57.1	0	3	43
S32	Asia Trade Center - Air-cooled Chiller	832150	825661	180.9	97	278	288	-57.2	0	3	43
S33	Asia Trade Center - Air-cooled Chiller	832168	825683	180.9	97	283	293	-57.3	0	3	43
S34	Asia Trade Center - Air-cooled Chiller	832172	825688	180.9	97	285	294	-57.4	0	3	43
										Total	**55**

Note:
[1] -5 dB(A) for partial screening or -10 dB(A) for complete screening due to various architectural features/ topography/ obstacles/ purpose-built noise barrier/ parapet wall, if any.

Summary of Fixed Noise Calculation

NSR ID	19F_N38
Description	19/F Flat - Living Room
Coor - x	832379
Coor - y	825499
Coor - z	106.6
Noise Criteria, dB(A)	70
Fixed Noise Level at Receiver, dB(A)	56
Compliance	Yes

Source ID	Description	Source coor-x	Source coor-y	Source coor-z	SWL, dB(A)	Horizontal Distance, m	Slant Distance, m	Distance Attenuation, dB(A)	Screening Correction [1], dB(A)	Façade Correction, dB(A)	Predicted Noise Level, $L_{eq(30min)}$, dB(A)
S01	GDS Data Centre - Cooling Tower	832181	825499	146.7	95	198	202	-54.1	-10	3	34
S02	GDS Data Centre - Cooling Tower	832187	825501	146.7	95	191	196	-53.8	-10	3	34
S03	GDS Data Centre - Cooling Tower	832194	825503	146.7	95	184	189	-53.5	-10	3	34
S04	GDS Data Centre - Cooling Tower	832201	825506	146.7	95	178	182	-53.2	-10	3	35
S05	GDS Data Centre - Cooling Tower	832208	825508	146.7	95	171	176	-52.9	-10	3	35
S06	GDS Data Centre - Cooling Tower	832214	825511	146.7	95	165	170	-52.6	-10	3	35
S07	Hotel Ease Tsuen Wan - Air-cooled Chiller	832186	825475	104.9	92	194	194	-53.7	-10	3	31
S08	Hotel Ease Tsuen Wan - Air-cooled Chiller	832190	825477	104.9	92	190	190	-53.6	-10	3	31
S09	Hotel Ease Tsuen Wan - Air-cooled Chiller	832194	825476	104.9	92	186	186	-53.4	-10	3	32
S10	Kwai Wu Industrial Building - Cooling Tower	832244	825480	99.3	86	136	136	-50.7	-10	3	28
S11	Kwai Wu Industrial Building - Cooling Tower	832244	825477	99.3	86	136	136	-50.7	-10	3	28
S12	Silka Tsuen Wan Hotel - Cooling Tower	832364	825551	88.9	91	54	56	-43.0	0	3	51
S13	Silka Tsuen Wan Hotel - Cooling Tower	832372	825551	88.9	91	52	55	-42.8	0	3	51
S14	iTech Tower 2 - Cooling Tower	832113	825386	116.0	94	289	289	-57.2	-10	3	30
S15	iTech Tower 2 - Cooling Tower	832115	825382	116.0	94	288	288	-57.2	-10	3	30
S16	iTech Tower 2 - Cooling Tower	832121	825389	116.0	94	280	280	-57.0	-10	3	30
S17	iTech Tower 2 - Cooling Tower	832117	825376	116.0	94	289	289	-57.2	-10	3	30
S18	iTech Tower 2 - Cooling Tower	832119	825373	116.0	94	289	289	-57.2	-10	3	30
S19	iTech Tower 2 - Cooling Tower	832123	825380	116.0	94	283	283	-57.0	-10	3	30
S20	iTech Tower 2 - Cooling Tower	832125	825376	116.0	94	282	282	-57.0	-10	3	30
S21	Regent Centre - Air-cooled Chiller	832242	825389	127.6	92	176	177	-53.0	-10	3	32
S22	Regent Centre - Air-cooled Chiller	832249	825390	127.6	92	169	171	-52.6	-10	3	32
S23	Regent Centre - Air-cooled Chiller	832251	825356	130.0	92	192	193	-53.7	-10	3	31
S24	Regent Centre - Air-cooled Chiller	832258	825357	130.0	92	186	188	-53.5	-10	3	32
S25	Tung Tak Center - Cooling Tower	832237	825556	75.8	91	153	156	-51.9	0	3	42
S26	Tung Tak Center - Cooling Tower	832235	825562	75.8	91	157	160	-52.1	0	3	42
S27	Tung Tak Center - Cooling Tower	832233	825567	75.8	91	161	164	-52.3	0	3	42
S28	Tung Tak Center - Cooling Tower	832230	825573	75.8	91	166	169	-52.5	0	3	41
S29	Asia Trade Center - Air-cooled Chiller	832142	825650	180.9	93	280	290	-57.3	0	3	39
S30	Asia Trade Center - Air-cooled Chiller	832176	825694	180.9	93	281	291	-57.3	0	3	39
S31	Asia Trade Center - Air-cooled Chiller	832147	825656	180.9	97	280	290	-57.2	0	3	43
S32	Asia Trade Center - Air-cooled Chiller	832150	825661	180.9	97	280	290	-57.2	0	3	43
S33	Asia Trade Center - Air-cooled Chiller	832168	825683	180.9	97	280	290	-57.2	0	3	43
S34	Asia Trade Center - Air-cooled Chiller	832172	825688	180.9	97	281	290	-57.3	0	3	43
										Total	**56**

Note:
[1] -5 dB(A) for partial screening or -10 dB(A) for complete screening due to various architectural features/ topography/ obstacles/ purpose-built noise barrier/ parapet wall, if any.

Summary of Fixed Noise Calculation

NSR ID	19F_N39
Description	19/F Flat - Living Room
Coor - x	832330
Coor - y	825500
Coor - z	106.6
Noise Criteria, dB(A)	70
Fixed Noise Level at Receiver, dB(A)	56
Compliance	Yes

Source ID	Description	Source coor-x	Source coor-y	Source coor-z	SWL, dB(A)	Horizontal Distance, m	Slant Distance, m	Distance Attenuation, dB(A)	Screening Correction [1], dB(A)	Façade Correction, dB(A)	Predicted Noise Level, $L_{eq(30min)}$, dB(A)
S01	GDS Data Centre - Cooling Tower	832181	825499	146.7	95	149	154	-51.7	-10	3	36
S02	GDS Data Centre - Cooling Tower	832187	825501	146.7	95	142	148	-51.4	-10	3	37
S03	GDS Data Centre - Cooling Tower	832194	825503	146.7	95	135	141	-51.0	-10	3	37
S04	GDS Data Centre - Cooling Tower	832201	825506	146.7	95	129	135	-50.6	-10	3	37
S05	GDS Data Centre - Cooling Tower	832208	825508	146.7	95	122	129	-50.2	-10	3	38
S06	GDS Data Centre - Cooling Tower	832214	825511	146.7	95	116	123	-49.8	-10	3	38
S07	Hotel Ease Tsuen Wan - Air-cooled Chiller	832186	825475	104.9	92	145	145	-51.2	0	3	44
S08	Hotel Ease Tsuen Wan - Air-cooled Chiller	832190	825477	104.9	92	142	142	-51.0	0	3	44
S09	Hotel Ease Tsuen Wan - Air-cooled Chiller	832194	825476	104.9	92	137	137	-50.8	0	3	44
S10	Kwai Wu Industrial Building - Cooling Tower	832244	825480	99.3	86	88	88	-46.9	0	3	42
S11	Kwai Wu Industrial Building - Cooling Tower	832244	825477	99.3	86	88	88	-46.9	0	3	42
S12	Silka Tsuen Wan Hotel - Cooling Tower	832364	825551	88.9	91	62	64	-44.2	-10	3	40
S13	Silka Tsuen Wan Hotel - Cooling Tower	832372	825551	88.9	91	66	69	-44.8	-10	3	39
S14	iTech Tower 2 - Cooling Tower	832113	825386	116.0	94	245	245	-55.8	-10	3	31
S15	iTech Tower 2 - Cooling Tower	832115	825382	116.0	94	244	244	-55.8	-10	3	31
S16	iTech Tower 2 - Cooling Tower	832121	825389	116.0	94	236	236	-55.5	-10	3	32
S17	iTech Tower 2 - Cooling Tower	832117	825376	116.0	94	246	246	-55.8	-10	3	31
S18	iTech Tower 2 - Cooling Tower	832119	825373	116.0	94	246	246	-55.8	-10	3	31
S19	iTech Tower 2 - Cooling Tower	832123	825380	116.0	94	239	239	-55.6	-10	3	31
S20	iTech Tower 2 - Cooling Tower	832125	825376	116.0	94	239	239	-55.6	-10	3	31
S21	Regent Centre - Air-cooled Chiller	832242	825389	127.6	92	141	143	-51.1	-10	3	34
S22	Regent Centre - Air-cooled Chiller	832249	825390	127.6	92	136	137	-50.8	-10	3	34
S23	Regent Centre - Air-cooled Chiller	832251	825356	130.0	92	164	166	-52.4	0	3	43
S24	Regent Centre - Air-cooled Chiller	832258	825357	130.0	92	159	161	-52.1	0	3	43
S25	Tung Tak Center - Cooling Tower	832237	825556	75.8	91	108	113	-49.0	0	3	45
S26	Tung Tak Center - Cooling Tower	832235	825562	75.8	91	113	117	-49.4	0	3	45
S27	Tung Tak Center - Cooling Tower	832233	825567	75.8	91	118	122	-49.7	0	3	44
S28	Tung Tak Center - Cooling Tower	832230	825573	75.8	91	123	127	-50.1	0	3	44
S29	Asia Trade Center - Air-cooled Chiller	832142	825650	180.9	93	240	251	-56.0	0	3	40
S30	Asia Trade Center - Air-cooled Chiller	832176	825694	180.9	93	248	259	-56.3	0	3	40
S31	Asia Trade Center - Air-cooled Chiller	832147	825656	180.9	97	240	252	-56.0	0	3	44
S32	Asia Trade Center - Air-cooled Chiller	832150	825661	180.9	97	241	252	-56.0	0	3	44
S33	Asia Trade Center - Air-cooled Chiller	832168	825683	180.9	97	244	256	-56.1	0	3	44
S34	Asia Trade Center - Air-cooled Chiller	832172	825688	180.9	97	246	257	-56.2	0	3	44
										Total	**56**

Note:
[1] -5 dB(A) for partial screening or -10 dB(A) for complete screening due to various architectural features/ topography/ obstacles/ purpose-built noise barrier/ parapet wall, if any.

Summary of Fixed Noise Calculation

NSR ID	22F_N17
Description	22/F Flat - Living Room
Coor - x	832344
Coor - y	825461
Coor - z	115.8
Noise Criteria, dB(A)	70
Fixed Noise Level at Receiver, dB(A)	55
Compliance	Yes

Source ID	Description	Source coor-x	Source coor-y	Source coor-z	SWL, dB(A)	Horizontal Distance, m	Slant Distance, m	Distance Attenuation, dB(A)	Screening Correction [1], dB(A)	Façade Correction, dB(A)	Predicted Noise Level, $L_{eq(30min)}$, dB(A)
S01	GDS Data Centre - Cooling Tower	832181	825499	146.7	95	167	170	-52.6	-10	3	35
S02	GDS Data Centre - Cooling Tower	832187	825501	146.7	95	161	164	-52.3	-10	3	36
S03	GDS Data Centre - Cooling Tower	832194	825503	146.7	95	155	158	-52.0	-10	3	36
S04	GDS Data Centre - Cooling Tower	832201	825506	146.7	95	149	153	-51.7	-10	3	36
S05	GDS Data Centre - Cooling Tower	832208	825508	146.7	95	144	147	-51.4	-10	3	37
S06	GDS Data Centre - Cooling Tower	832214	825511	146.7	95	139	142	-51.1	-10	3	37
S07	Hotel Ease Tsuen Wan - Air-cooled Chiller	832186	825475	104.9	92	158	158	-52.0	0	3	43
S08	Hotel Ease Tsuen Wan - Air-cooled Chiller	832190	825477	104.9	92	155	155	-51.8	0	3	43
S09	Hotel Ease Tsuen Wan - Air-cooled Chiller	832194	825476	104.9	92	150	151	-51.6	0	3	43
S10	Kwai Wu Industrial Building - Cooling Tower	832244	825480	99.3	86	101	103	-48.2	0	3	41
S11	Kwai Wu Industrial Building - Cooling Tower	832244	825477	99.3	86	100	102	-48.2	0	3	41
S12	Silka Tsuen Wan Hotel - Cooling Tower	832364	825551	88.9	91	92	96	-47.6	-10	3	36
S13	Silka Tsuen Wan Hotel - Cooling Tower	832372	825551	88.9	91	94	98	-47.8	-10	3	36
S14	iTech Tower 2 - Cooling Tower	832113	825386	116.0	94	242	242	-55.7	-10	3	31
S15	iTech Tower 2 - Cooling Tower	832115	825382	116.0	94	242	242	-55.7	-10	3	31
S16	iTech Tower 2 - Cooling Tower	832121	825389	116.0	94	234	234	-55.4	-10	3	32
S17	iTech Tower 2 - Cooling Tower	832117	825376	116.0	94	242	242	-55.7	-10	3	31
S18	iTech Tower 2 - Cooling Tower	832119	825373	116.0	94	241	241	-55.7	-10	3	31
S19	iTech Tower 2 - Cooling Tower	832123	825380	116.0	94	235	235	-55.4	-10	3	32
S20	iTech Tower 2 - Cooling Tower	832125	825376	116.0	94	235	235	-55.4	-10	3	32
S21	Regent Centre - Air-cooled Chiller	832242	825389	127.6	92	125	125	-50.0	-10	3	35
S22	Regent Centre - Air-cooled Chiller	832249	825390	127.6	92	118	119	-49.5	-10	3	36
S23	Regent Centre - Air-cooled Chiller	832251	825356	130.0	92	140	141	-51.0	-10	3	34
S24	Regent Centre - Air-cooled Chiller	832258	825357	130.0	92	135	135	-50.6	-10	3	34
S25	Tung Tak Center - Cooling Tower	832237	825556	75.8	91	143	148	-51.4	0	3	43
S26	Tung Tak Center - Cooling Tower	832235	825562	75.8	91	148	154	-51.7	0	3	42
S27	Tung Tak Center - Cooling Tower	832233	825567	75.8	91	153	159	-52.0	0	3	42
S28	Tung Tak Center - Cooling Tower	832230	825573	75.8	91	159	164	-52.3	0	3	42
S29	Asia Trade Center - Air-cooled Chiller	832142	825650	180.9	93	276	283	-57.1	0	3	39
S30	Asia Trade Center - Air-cooled Chiller	832176	825694	180.9	93	287	294	-57.4	0	3	39
S31	Asia Trade Center - Air-cooled Chiller	832147	825656	180.9	97	277	284	-57.1	0	3	43
S32	Asia Trade Center - Air-cooled Chiller	832150	825661	180.9	97	278	285	-57.1	0	3	43
S33	Asia Trade Center - Air-cooled Chiller	832168	825683	180.9	97	283	290	-57.3	0	3	43
S34	Asia Trade Center - Air-cooled Chiller	832172	825688	180.9	97	285	292	-57.3	0	3	43
										Total	**55**

Note:
[1] -5 dB(A) for partial screening or -10 dB(A) for complete screening due to various architectural features/ topography/ obstacles/ purpose-built noise barrier/ parapet wall, if any.

Summary of Fixed Noise Calculation

NSR ID	22F_N38
Description	22/F Flat - Living Room
Coor - x	832379
Coor - y	825499
Coor - z	115.8
Noise Criteria, dB(A)	70
Fixed Noise Level at Receiver, dB(A)	56
Compliance	Yes

Source ID	Description	Source coor-x	Source coor-y	Source coor-z	SWL, dB(A)	Horizontal Distance, m	Slant Distance, m	Distance Attenuation, dB(A)	Screening Correction [1], dB(A)	Façade Correction, dB(A)	Predicted Noise Level, $L_{eq(30min)}$, dB(A)
S01	GDS Data Centre - Cooling Tower	832181	825499	146.7	95	198	200	-54.0	-10	3	34
S02	GDS Data Centre - Cooling Tower	832187	825501	146.7	95	191	194	-53.7	-10	3	34
S03	GDS Data Centre - Cooling Tower	832194	825503	146.7	95	184	187	-53.4	-10	3	35
S04	GDS Data Centre - Cooling Tower	832201	825506	146.7	95	178	181	-53.1	-10	3	35
S05	GDS Data Centre - Cooling Tower	832208	825508	146.7	95	171	174	-52.8	-10	3	35
S06	GDS Data Centre - Cooling Tower	832214	825511	146.7	95	165	168	-52.5	-10	3	35
S07	Hotel Ease Tsuen Wan - Air-cooled Chiller	832186	825475	104.9	92	194	194	-53.8	-10	3	31
S08	Hotel Ease Tsuen Wan - Air-cooled Chiller	832190	825477	104.9	92	190	191	-53.6	-10	3	31
S09	Hotel Ease Tsuen Wan - Air-cooled Chiller	832194	825476	104.9	92	186	186	-53.4	-10	3	32
S10	Kwai Wu Industrial Building - Cooling Tower	832244	825480	99.3	86	136	137	-50.7	-10	3	28
S11	Kwai Wu Industrial Building - Cooling Tower	832244	825477	99.3	86	136	137	-50.8	-10	3	28
S12	Silka Tsuen Wan Hotel - Cooling Tower	832364	825551	88.9	91	54	60	-43.6	0	3	50
S13	Silka Tsuen Wan Hotel - Cooling Tower	832372	825551	88.9	91	52	58	-43.3	0	3	51
S14	iTech Tower 2 - Cooling Tower	832113	825386	116.0	94	289	289	-57.2	-10	3	30
S15	iTech Tower 2 - Cooling Tower	832115	825382	116.0	94	288	288	-57.2	-10	3	30
S16	iTech Tower 2 - Cooling Tower	832121	825389	116.0	94	280	280	-57.0	-10	3	30
S17	iTech Tower 2 - Cooling Tower	832117	825376	116.0	94	289	289	-57.2	-10	3	30
S18	iTech Tower 2 - Cooling Tower	832119	825373	116.0	94	289	289	-57.2	-10	3	30
S19	iTech Tower 2 - Cooling Tower	832123	825380	116.0	94	283	283	-57.0	-10	3	30
S20	iTech Tower 2 - Cooling Tower	832125	825376	116.0	94	282	282	-57.0	-10	3	30
S21	Regent Centre - Air-cooled Chiller	832242	825389	127.6	92	176	176	-52.9	-10	3	32
S22	Regent Centre - Air-cooled Chiller	832249	825390	127.6	92	169	170	-52.6	-10	3	32
S23	Regent Centre - Air-cooled Chiller	832251	825356	130.0	92	192	192	-53.7	-10	3	31
S24	Regent Centre - Air-cooled Chiller	832258	825357	130.0	92	186	187	-53.4	-10	3	32
S25	Tung Tak Center - Cooling Tower	832237	825556	75.8	91	153	158	-52.0	0	3	42
S26	Tung Tak Center - Cooling Tower	832235	825562	75.8	91	157	162	-52.2	0	3	42
S27	Tung Tak Center - Cooling Tower	832233	825567	75.8	91	161	166	-52.4	0	3	42
S28	Tung Tak Center - Cooling Tower	832230	825573	75.8	91	166	171	-52.6	0	3	41
S29	Asia Trade Center - Air-cooled Chiller	832142	825650	180.9	93	280	288	-57.2	0	3	39
S30	Asia Trade Center - Air-cooled Chiller	832176	825694	180.9	93	281	289	-57.2	0	3	39
S31	Asia Trade Center - Air-cooled Chiller	832147	825656	180.9	97	280	288	-57.2	0	3	43
S32	Asia Trade Center - Air-cooled Chiller	832150	825661	180.9	97	280	287	-57.2	0	3	43
S33	Asia Trade Center - Air-cooled Chiller	832168	825683	180.9	97	280	288	-57.2	0	3	43
S34	Asia Trade Center - Air-cooled Chiller	832172	825688	180.9	97	281	288	-57.2	0	3	43
										Total	**56**

Note:
[1] -5 dB(A) for partial screening or -10 dB(A) for complete screening due to various architectural features/ topography/ obstacles/ purpose-built noise barrier/ parapet wall, if any.

Summary of Fixed Noise Calculation

NSR ID	22F_N39
Description	22/F Flat - Living Room
Coor - x	832330
Coor - y	825500
Coor - z	115.8
Noise Criteria, dB(A)	70
Fixed Noise Level at Receiver, dB(A)	56
Compliance	Yes

Source ID	Description	Source coor-x	Source coor-y	Source coor-z	SWL, dB(A)	Horizontal Distance, m	Slant Distance, m	Distance Attenuation, dB(A)	Screening Correction [1], dB(A)	Façade Correction, dB(A)	Predicted Noise Level, $L_{eq(30min)}$, dB(A)
S01	GDS Data Centre - Cooling Tower	832181	825499	146.7	95	149	152	-51.6	-10	3	36
S02	GDS Data Centre - Cooling Tower	832187	825501	146.7	95	142	145	-51.3	-10	3	37
S03	GDS Data Centre - Cooling Tower	832194	825503	146.7	95	135	139	-50.8	-10	3	37
S04	GDS Data Centre - Cooling Tower	832201	825506	146.7	95	129	132	-50.4	-10	3	38
S05	GDS Data Centre - Cooling Tower	832208	825508	146.7	95	122	126	-50.0	-10	3	38
S06	GDS Data Centre - Cooling Tower	832214	825511	146.7	95	116	120	-49.6	-10	3	38
S07	Hotel Ease Tsuen Wan - Air-cooled Chiller	832186	825475	104.9	92	145	146	-51.3	0	3	44
S08	Hotel Ease Tsuen Wan - Air-cooled Chiller	832190	825477	104.9	92	142	142	-51.0	0	3	44
S09	Hotel Ease Tsuen Wan - Air-cooled Chiller	832194	825476	104.9	92	137	138	-50.8	0	3	44
S10	Kwai Wu Industrial Building - Cooling Tower	832244	825480	99.3	86	88	89	-47.0	0	3	42
S11	Kwai Wu Industrial Building - Cooling Tower	832244	825477	99.3	86	88	90	-47.1	0	3	42
S12	Silka Tsuen Wan Hotel - Cooling Tower	832364	825551	88.9	91	62	67	-44.6	-10	3	39
S13	Silka Tsuen Wan Hotel - Cooling Tower	832372	825551	88.9	91	66	72	-45.1	-10	3	39
S14	iTech Tower 2 - Cooling Tower	832113	825386	116.0	94	245	245	-55.8	-10	3	31
S15	iTech Tower 2 - Cooling Tower	832115	825382	116.0	94	244	244	-55.8	-10	3	31
S16	iTech Tower 2 - Cooling Tower	832121	825389	116.0	94	236	236	-55.5	-10	3	32
S17	iTech Tower 2 - Cooling Tower	832117	825376	116.0	94	246	246	-55.8	-10	3	31
S18	iTech Tower 2 - Cooling Tower	832119	825373	116.0	94	246	246	-55.8	-10	3	31
S19	iTech Tower 2 - Cooling Tower	832123	825380	116.0	94	239	239	-55.6	-10	3	31
S20	iTech Tower 2 - Cooling Tower	832125	825376	116.0	94	239	239	-55.6	-10	3	31
S21	Regent Centre - Air-cooled Chiller	832242	825389	127.6	92	141	142	-51.0	-10	3	34
S22	Regent Centre - Air-cooled Chiller	832249	825390	127.6	92	136	136	-50.7	-10	3	34
S23	Regent Centre - Air-cooled Chiller	832251	825356	130.0	92	164	164	-52.3	0	3	43
S24	Regent Centre - Air-cooled Chiller	832258	825357	130.0	92	159	160	-52.1	0	3	43
S25	Tung Tak Center - Cooling Tower	832237	825556	75.8	91	108	116	-49.3	0	3	45
S26	Tung Tak Center - Cooling Tower	832235	825562	75.8	91	113	120	-49.6	0	3	44
S27	Tung Tak Center - Cooling Tower	832233	825567	75.8	91	118	125	-49.9	0	3	44
S28	Tung Tak Center - Cooling Tower	832230	825573	75.8	91	123	129	-50.2	0	3	44
S29	Asia Trade Center - Air-cooled Chiller	832142	825650	180.9	93	240	249	-55.9	0	3	40
S30	Asia Trade Center - Air-cooled Chiller	832176	825694	180.9	93	248	256	-56.2	0	3	40
S31	Asia Trade Center - Air-cooled Chiller	832147	825656	180.9	97	240	249	-55.9	0	3	44
S32	Asia Trade Center - Air-cooled Chiller	832150	825661	180.9	97	241	250	-55.9	0	3	44
S33	Asia Trade Center - Air-cooled Chiller	832168	825683	180.9	97	244	253	-56.1	0	3	44
S34	Asia Trade Center - Air-cooled Chiller	832172	825688	180.9	97	246	254	-56.1	0	3	44
										Total	**56**

Note:
[1] -5 dB(A) for partial screening or -10 dB(A) for complete screening due to various architectural features/ topography/ obstacles/ purpose-built noise barrier/ parapet wall, if any.

Summary of Fixed Noise Calculation

NSR ID	26F_N15
Description	26/F Flat - Living Room
Coor - x	832344
Coor - y	825461
Coor - z	128.1
Noise Criteria, dB(A)	70
Fixed Noise Level at Receiver, dB(A)	55
Compliance	Yes

Source ID	Description	Source coor-x	Source coor-y	Source coor-z	SWL, dB(A)	Horizontal Distance, m	Slant Distance, m	Distance Attenuation, dB(A)	Screening Correction [1], dB(A)	Façade Correction, dB(A)	Predicted Noise Level, $L_{eq(30min)}$, dB(A)
S01	GDS Data Centre - Cooling Tower	832181	825499	146.7	95	167	168	-52.5	-10	3	35
S02	GDS Data Centre - Cooling Tower	832187	825501	146.7	95	161	162	-52.2	-10	3	36
S03	GDS Data Centre - Cooling Tower	832194	825503	146.7	95	155	156	-51.9	-10	3	36
S04	GDS Data Centre - Cooling Tower	832201	825506	146.7	95	149	151	-51.6	-10	3	36
S05	GDS Data Centre - Cooling Tower	832208	825508	146.7	95	144	145	-51.2	-10	3	37
S06	GDS Data Centre - Cooling Tower	832214	825511	146.7	95	139	140	-50.9	-10	3	37
S07	Hotel Ease Tsuen Wan - Air-cooled Chiller	832186	825475	104.9	92	158	159	-52.1	0	3	43
S08	Hotel Ease Tsuen Wan - Air-cooled Chiller	832190	825477	104.9	92	155	156	-51.9	0	3	43
S09	Hotel Ease Tsuen Wan - Air-cooled Chiller	832194	825476	104.9	92	150	152	-51.6	0	3	43
S10	Kwai Wu Industrial Building - Cooling Tower	832244	825480	99.3	86	101	105	-48.4	0	3	41
S11	Kwai Wu Industrial Building - Cooling Tower	832244	825477	99.3	86	100	105	-48.4	0	3	41
S12	Silka Tsuen Wan Hotel - Cooling Tower	832364	825551	88.9	91	92	100	-48.0	-10	3	36
S13	Silka Tsuen Wan Hotel - Cooling Tower	832372	825551	88.9	91	94	102	-48.1	-10	3	36
S14	iTech Tower 2 - Cooling Tower	832113	825386	116.0	94	242	243	-55.7	-10	3	31
S15	iTech Tower 2 - Cooling Tower	832115	825382	116.0	94	242	242	-55.7	-10	3	31
S16	iTech Tower 2 - Cooling Tower	832121	825389	116.0	94	234	234	-55.4	-10	3	32
S17	iTech Tower 2 - Cooling Tower	832117	825376	116.0	94	242	242	-55.7	-10	3	31
S18	iTech Tower 2 - Cooling Tower	832119	825373	116.0	94	241	242	-55.7	-10	3	31
S19	iTech Tower 2 - Cooling Tower	832123	825380	116.0	94	235	236	-55.5	-10	3	32
S20	iTech Tower 2 - Cooling Tower	832125	825376	116.0	94	235	235	-55.4	-10	3	32
S21	Regent Centre - Air-cooled Chiller	832242	825389	127.6	92	125	125	-49.9	-10	3	35
S22	Regent Centre - Air-cooled Chiller	832249	825390	127.6	92	118	118	-49.5	-10	3	36
S23	Regent Centre - Air-cooled Chiller	832251	825356	130.0	92	140	140	-50.9	-10	3	34
S24	Regent Centre - Air-cooled Chiller	832258	825357	130.0	92	135	135	-50.6	-10	3	34
S25	Tung Tak Center - Cooling Tower	832237	825556	75.8	91	143	152	-51.6	0	3	42
S26	Tung Tak Center - Cooling Tower	832235	825562	75.8	91	148	157	-51.9	0	3	42
S27	Tung Tak Center - Cooling Tower	832233	825567	75.8	91	153	162	-52.2	0	3	42
S28	Tung Tak Center - Cooling Tower	832230	825573	75.8	91	159	167	-52.5	0	3	42
S29	Asia Trade Center - Air-cooled Chiller	832142	825650	180.9	93	276	281	-57.0	0	3	39
S30	Asia Trade Center - Air-cooled Chiller	832176	825694	180.9	93	287	292	-57.3	0	3	39
S31	Asia Trade Center - Air-cooled Chiller	832147	825656	180.9	97	277	282	-57.0	0	3	43
S32	Asia Trade Center - Air-cooled Chiller	832150	825661	180.9	97	278	283	-57.0	0	3	43
S33	Asia Trade Center - Air-cooled Chiller	832168	825683	180.9	97	283	288	-57.2	0	3	43
S34	Asia Trade Center - Air-cooled Chiller	832172	825688	180.9	97	285	290	-57.2	0	3	43
										Total	**55**

Note:
[1] -5 dB(A) for partial screening or -10 dB(A) for complete screening due to various architectural features/ topography/ obstacles/ purpose-built noise barrier/ parapet wall, if any.

Summary of Fixed Noise Calculation

NSR ID	26F_N36
Description	26/F Flat - Living Room
Coor - x	832379
Coor - y	825499
Coor - z	128.1
Noise Criteria, dB(A)	70
Fixed Noise Level at Receiver, dB(A)	56
Compliance	Yes

Source ID	Description	Source coor-x	Source coor-y	Source coor-z	SWL, dB(A)	Horizontal Distance, m	Slant Distance, m	Distance Attenuation, dB(A)	Screening Correction [1], dB(A)	Façade Correction, dB(A)	Predicted Noise Level, $L_{eq(30min)}$, dB(A)
S01	GDS Data Centre - Cooling Tower	832181	825499	146.7	95	198	199	-54.0	-10	3	34
S02	GDS Data Centre - Cooling Tower	832187	825501	146.7	95	191	192	-53.7	-10	3	34
S03	GDS Data Centre - Cooling Tower	832194	825503	146.7	95	184	185	-53.4	-10	3	35
S04	GDS Data Centre - Cooling Tower	832201	825506	146.7	95	178	179	-53.1	-10	3	35
S05	GDS Data Centre - Cooling Tower	832208	825508	146.7	95	171	172	-52.7	-10	3	35
S06	GDS Data Centre - Cooling Tower	832214	825511	146.7	95	165	166	-52.4	-10	3	36
S07	Hotel Ease Tsuen Wan - Air-cooled Chiller	832186	825475	104.9	92	194	195	-53.8	-10	3	31
S08	Hotel Ease Tsuen Wan - Air-cooled Chiller	832190	825477	104.9	92	190	192	-53.7	-10	3	31
S09	Hotel Ease Tsuen Wan - Air-cooled Chiller	832194	825476	104.9	92	186	188	-53.5	-10	3	32
S10	Kwai Wu Industrial Building - Cooling Tower	832244	825480	99.3	86	136	139	-50.9	-10	3	28
S11	Kwai Wu Industrial Building - Cooling Tower	832244	825477	99.3	86	136	139	-50.9	-10	3	28
S12	Silka Tsuen Wan Hotel - Cooling Tower	832364	825551	88.9	91	54	66	-44.4	0	3	50
S13	Silka Tsuen Wan Hotel - Cooling Tower	832372	825551	88.9	91	52	65	-44.3	0	3	50
S14	iTech Tower 2 - Cooling Tower	832113	825386	116.0	94	289	289	-57.2	-10	3	30
S15	iTech Tower 2 - Cooling Tower	832115	825382	116.0	94	288	288	-57.2	-10	3	30
S16	iTech Tower 2 - Cooling Tower	832121	825389	116.0	94	280	281	-57.0	-10	3	30
S17	iTech Tower 2 - Cooling Tower	832117	825376	116.0	94	289	289	-57.2	-10	3	30
S18	iTech Tower 2 - Cooling Tower	832119	825373	116.0	94	289	289	-57.2	-10	3	30
S19	iTech Tower 2 - Cooling Tower	832123	825380	116.0	94	283	283	-57.0	-10	3	30
S20	iTech Tower 2 - Cooling Tower	832125	825376	116.0	94	282	283	-57.0	-10	3	30
S21	Regent Centre - Air-cooled Chiller	832242	825389	127.6	92	176	176	-52.9	-10	3	32
S22	Regent Centre - Air-cooled Chiller	832249	825390	127.6	92	169	169	-52.6	-10	3	32
S23	Regent Centre - Air-cooled Chiller	832251	825356	130.0	92	192	192	-53.7	-10	3	31
S24	Regent Centre - Air-cooled Chiller	832258	825357	130.0	92	186	186	-53.4	-10	3	32
S25	Tung Tak Center - Cooling Tower	832237	825556	75.8	91	153	162	-52.2	0	3	42
S26	Tung Tak Center - Cooling Tower	832235	825562	75.8	91	157	166	-52.4	0	3	42
S27	Tung Tak Center - Cooling Tower	832233	825567	75.8	91	161	170	-52.6	0	3	41
S28	Tung Tak Center - Cooling Tower	832230	825573	75.8	91	166	174	-52.8	0	3	41
S29	Asia Trade Center - Air-cooled Chiller	832142	825650	180.9	93	280	285	-57.1	0	3	39
S30	Asia Trade Center - Air-cooled Chiller	832176	825694	180.9	93	281	286	-57.1	0	3	39
S31	Asia Trade Center - Air-cooled Chiller	832147	825656	180.9	97	280	285	-57.1	0	3	43
S32	Asia Trade Center - Air-cooled Chiller	832150	825661	180.9	97	280	285	-57.1	0	3	43
S33	Asia Trade Center - Air-cooled Chiller	832168	825683	180.9	97	280	285	-57.1	0	3	43
S34	Asia Trade Center - Air-cooled Chiller	832172	825688	180.9	97	281	286	-57.1	0	3	43
										Total	**56**

Note:
[1] -5 dB(A) for partial screening or -10 dB(A) for complete screening due to various architectural features/ topography/ obstacles/ purpose-built noise barrier/ parapet wall, if any.

Summary of Fixed Noise Calculation

NSR ID	26F_N37
Description	26/F Flat - Living Room
Coor - x	832330
Coor - y	825500
Coor - z	128.1
Noise Criteria, dB(A)	70
Fixed Noise Level at Receiver, dB(A)	56
Compliance	Yes

Source ID	Description	Source coor-x	Source coor-y	Source coor-z	SWL, dB(A)	Horizontal Distance, m	Slant Distance, m	Distance Attenuation, dB(A)	Screening Correction [1], dB(A)	Façade Correction, dB(A)	Predicted Noise Level, $L_{eq(30min)}$, dB(A)
S01	GDS Data Centre - Cooling Tower	832181	825499	146.7	95	149	150	-51.5	-10	3	36
S02	GDS Data Centre - Cooling Tower	832187	825501	146.7	95	142	143	-51.1	-10	3	37
S03	GDS Data Centre - Cooling Tower	832194	825503	146.7	95	135	136	-50.7	-10	3	37
S04	GDS Data Centre - Cooling Tower	832201	825506	146.7	95	129	130	-50.3	-10	3	38
S05	GDS Data Centre - Cooling Tower	832208	825508	146.7	95	122	124	-49.8	-10	3	38
S06	GDS Data Centre - Cooling Tower	832214	825511	146.7	95	116	118	-49.4	-10	3	39
S07	Hotel Ease Tsuen Wan - Air-cooled Chiller	832186	825475	104.9	92	145	147	-51.3	0	3	44
S08	Hotel Ease Tsuen Wan - Air-cooled Chiller	832190	825477	104.9	92	142	143	-51.1	0	3	44
S09	Hotel Ease Tsuen Wan - Air-cooled Chiller	832194	825476	104.9	92	137	139	-50.9	0	3	44
S10	Kwai Wu Industrial Building - Cooling Tower	832244	825480	99.3	86	88	92	-47.3	0	3	42
S11	Kwai Wu Industrial Building - Cooling Tower	832244	825477	99.3	86	88	93	-47.3	0	3	42
S12	Silka Tsuen Wan Hotel - Cooling Tower	832364	825551	88.9	91	62	73	-45.3	-10	3	39
S13	Silka Tsuen Wan Hotel - Cooling Tower	832372	825551	88.9	91	66	77	-45.7	-10	3	38
S14	iTech Tower 2 - Cooling Tower	832113	825386	116.0	94	245	245	-55.8	-10	3	31
S15	iTech Tower 2 - Cooling Tower	832115	825382	116.0	94	244	245	-55.8	-10	3	31
S16	iTech Tower 2 - Cooling Tower	832121	825389	116.0	94	236	236	-55.5	-10	3	32
S17	iTech Tower 2 - Cooling Tower	832117	825376	116.0	94	246	246	-55.8	-10	3	31
S18	iTech Tower 2 - Cooling Tower	832119	825373	116.0	94	246	246	-55.8	-10	3	31
S19	iTech Tower 2 - Cooling Tower	832123	825380	116.0	94	239	239	-55.6	-10	3	31
S20	iTech Tower 2 - Cooling Tower	832125	825376	116.0	94	239	240	-55.6	-10	3	31
S21	Regent Centre - Air-cooled Chiller	832242	825389	127.6	92	141	141	-51.0	-10	3	34
S22	Regent Centre - Air-cooled Chiller	832249	825390	127.6	92	136	136	-50.7	-10	3	34
S23	Regent Centre - Air-cooled Chiller	832251	825356	130.0	92	164	164	-52.3	0	3	43
S24	Regent Centre - Air-cooled Chiller	832258	825357	130.0	92	159	159	-52.1	0	3	43
S25	Tung Tak Center - Cooling Tower	832237	825556	75.8	91	108	120	-49.6	0	3	44
S26	Tung Tak Center - Cooling Tower	832235	825562	75.8	91	113	125	-49.9	0	3	44
S27	Tung Tak Center - Cooling Tower	832233	825567	75.8	91	118	129	-50.2	0	3	44
S28	Tung Tak Center - Cooling Tower	832230	825573	75.8	91	123	134	-50.5	0	3	43
S29	Asia Trade Center - Air-cooled Chiller	832142	825650	180.9	93	240	246	-55.8	0	3	40
S30	Asia Trade Center - Air-cooled Chiller	832176	825694	180.9	93	248	253	-56.1	0	3	40
S31	Asia Trade Center - Air-cooled Chiller	832147	825656	180.9	97	240	246	-55.8	0	3	44
S32	Asia Trade Center - Air-cooled Chiller	832150	825661	180.9	97	241	247	-55.8	0	3	44
S33	Asia Trade Center - Air-cooled Chiller	832168	825683	180.9	97	244	250	-56.0	0	3	44
S34	Asia Trade Center - Air-cooled Chiller	832172	825688	180.9	97	246	252	-56.0	0	3	44
										Total	**56**

Note:
[1] -5 dB(A) for partial screening or -10 dB(A) for complete screening due to various architectural features/ topography/ obstacles/ purpose-built noise barrier/ parapet wall, if any.

APPENDIX 3.3
SITE SURVEY RECORD

Fixed Noise Sources Survey

Noise Source ID: S01-S06

Name	Date	Time	Major observation
GDS Data Centre	11 Dec 2023 20 Feb 2025 08 Apr 2025	0900-1700 1000-1300 1400-1800	- 6 nos. of Cooling Tower were observed as major noise source - No impulsiveness, tonality and intermittency characteristic was observed

Fixed Noise Sources Survey

Noise Source ID: S07-S09

Name	Date	Time	Major observation
Hotel Ease Tsuen Wan	11 Dec 2023 20 Feb 2025 08 Apr 2025	0900-1700 1000-1300 1400-1800	- 3 nos. of Air-cooled Chiller were observed as major noise source - No impulsiveness, tonality and intermittency characteristic was observed

Fixed Noise Sources Survey

Noise Source ID: S10-S11

Name	Date	Time	Major observation
Kwai Wu Industrial Building	11 Dec 2023 20 Feb 2025 08 Apr 2025	0900-1700 1000-1300 1400-1800	- 2 nos. of Cooling Tower were observed as major noise source - No impulsiveness, tonality and intermittency characteristic was observed

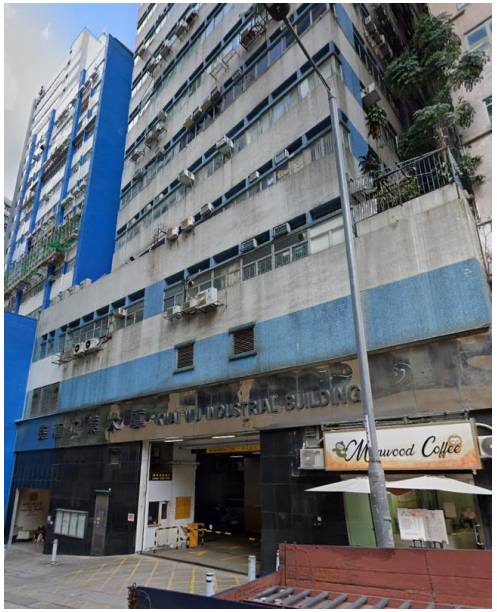

Fixed Noise Sources Survey

Noise Source ID: S12-S13

Name	Date	Time	Major observation
Silka Tsuen Wan Hotel	11 Dec 2023 20 Feb 2025 08 Apr 2025	0900-1700 1000-1300 1400-1800	- 2 nos. of Cooling Tower were observed as major noise source - No impulsiveness, tonality and intermittency characteristic was observed

Fixed Noise Sources Survey

Noise Source ID: S14-S20

Name	Date	Time	Major observation
iTech Tower 2	11 Dec 2023 20 Feb 2025 08 Apr 2025	0900-1700 1000-1300 1400-1800	- 7 nos. of Cooling Tower were observed as major noise source - No impulsiveness, tonality and intermittency characteristic was observed

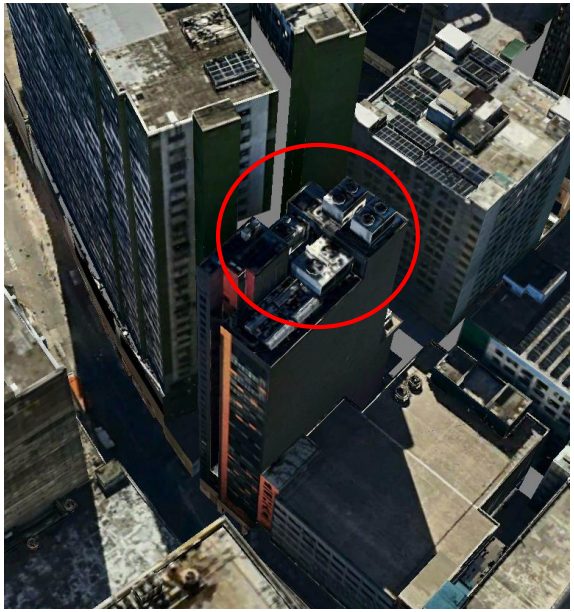

Fixed Noise Sources Survey

Noise Source ID: N/A

Name	Date	Time	Major observation
iCity	11 Dec 2023 20 Feb 2025 08 Apr 2025	0900-1700 1000-1300 1400-1800	- No noisy equipment was identified - As advised by the operator, only ventilation fan and split-type AC is used for the building, therefore, it is not considered as Noise Source



Fixed Noise Sources Survey

Noise Source ID: N/A

Name	Date	Time	Major observation
Cheung Wing Industrial Building	11 Dec 2023 20 Feb 2025 08 Apr 2025	0900-1700 1000-1300 1400-1800	- No noisy equipment was identified - It is not considered as Noise Source

Fixed Noise Sources Survey

Noise Source ID: N/A

Name	Date	Time	Major observation
Leun Fat Industrial (No.3) Building	11 Dec 2023 20 Feb 2025 08 Apr 2025	0900-1700 1000-1300 1400-1800	- No noisy equipment was identified - It is not considered as Noise Source

Fixed Noise Sources Survey

Noise Source ID: S21-S24

Name	Date	Time	Major observation
Regent Center	11 Dec 2023 20 Feb 2025 08 Apr 2025	0900-1700 1000-1300 1400-1800	- 2 nos. of Air-cooled Chiller were observed in each block of the building as major noise source - No impulsiveness, tonality and intermittency characteristic was observed

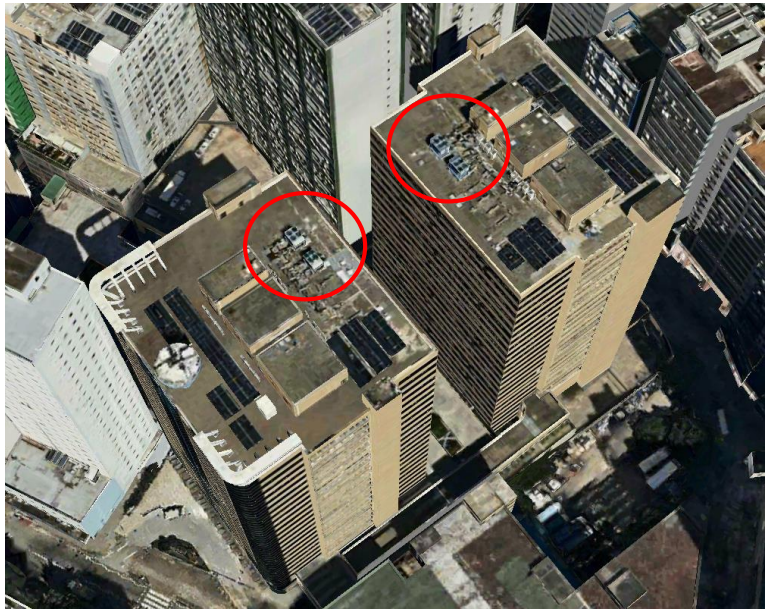

Fixed Noise Sources Survey

Noise Source ID: S25-S28

Name	Date	Time	Major observation
Tung Tak Center	11 Dec 2023 20 Feb 2025 08 Apr 2025	0900-1700 1000-1300 1400-1800	- 4 nos. of Cooling Tower were observed as major noise source - No impulsiveness, tonality and intermittency characteristic was observed

Fixed Noise Sources Survey

Noise Source ID: S29-S34

Name	Date	Time	Major observation
Asia Trade Center	11 Dec 2023 20 Feb 2025 08 Apr 2025	0900-1700 1000-1300 1400-1800	- 6 nos. of Air-cooled Chiller were observed as major noise source - No impulsiveness, tonality and intermittency characteristic was observed