Form No. S16-III
表格第 S16-III 號

APPLICATION FOR PERMISSION UNDER SECTION 16 OF THE TOWN PLANNING ORDINANCE (CAP. 131)

根據《城市規劃條例》(第131章)第16條遞交的許可申請

Applicable to Proposal Only Involving Temporary Use/Development of Land and/or Building Not Exceeding 3 Years in Rural Areas or Regulated Areas, or Renewal of Permission for such Temporary Use or Development*

適用於祇涉及位於鄉郊地區或受規管地區土地上及/或建築物內進行為期不超過三年的臨時用途/發展或該等臨時用途/發展的許可續期的建議*

**Form No. S16-I should be used for other Temporary Use/Development of Land and/or Building (e.g. temporary use/developments in the Urban Area)and Renewal of Permission for such Temporary Use or Development.*
**其他土地上及/或建築物內的臨時用途/發展 (例如位於市區內的臨時用途或發展)及有關該等臨時用途/發展的許可續期，應使用表格第 S16-I 號。*

Applicant who would like to publish the notice of application in local newspapers to meet one of the Town Planning Board's requirements of taking reasonable steps to obtain consent of or give notification to the current land owner, please refer to the following link regarding publishing the notice in the designated newspapers: https://www.tpb.gov.hk/en/plan_application/apply.html

申請人如欲在本地報章刊登申請通知，以採取城市規劃委員會就取得現行土地擁有人的同意或通知現行土地擁有人所指定的其中一項合理步驟，請瀏覽以下網址有關在指定的報章刊登通知：https://www.tpb.gov.hk/tc/plan_application/apply.html

General Note and Annotation for the Form
填寫表格的一般指引及註解

"Current land owner" means any person whose name is registered in the Land Registry as that of an owner of the land to which the application relates, as at 6 weeks before the application is made
「現行土地擁有人」指在提出申請前六星期，其姓名或名稱已在土地註冊處註冊為該申請所關乎的土地的擁有人的人

& Please attach documentary proof 請夾附證明文件

^ Please insert number where appropriate 請在適當地方註明編號

Please fill "NA" for inapplicable item 請在不適用的項目填寫「不適用」

Please use separate sheets if the space provided is insufficient 如所提供的空間不足，請另頁說明

Please insert a「✔」at the appropriate box 請在適當的方格內上加上「✔」號

2402115 28/8 by hand

Form No. S16-III 表格第 S16-III 號

For Official Use Only 請勿填寫此欄	Application No. 申請編號	A/YL-KTN/1049
	Date Received 收到日期	10 SEP 2024

1. The completed form and supporting documents (if any) should be sent to the Secretary, Town Planning Board (the Board), 15/F, North Point Government Offices, 333 Java Road, North Point, Hong Kong.
申請人須把填妥的申請表格及其他支持申請的文件 (倘有)，送交香港北角渣華道 333 號北角政府合署 15 樓城市規劃委員會(下稱「委員會」)秘書收。

2. Please read the "Guidance Notes" carefully before you fill in this form. The document can be downloaded from the Board's website at http://www.tpb.gov.hk/. It can also be obtained from the Secretariat of the Board at 15/F, North Point Government Offices, 333 Java Road, North Point, Hong Kong (Tel: 2231 4810 or 2231 4835), and the Planning Enquiry Counters of the Planning Department (Hotline: 2231 5000) (17/F, North Point Government Offices, 333 Java Road, North Point, Hong Kong and 14/F, Sha Tin Government Offices, 1 Sheung Wo Che Road, Sha Tin, New Territories).
請先細閱《申請須知》的資料單張，然後填寫此表格。該份文件可從委員會的網頁下載 (網址：http://www.tpb.gov.hk/)，亦可向委員會秘書處 (香港北角渣華道 333 號北角政府合署 15 樓 – 電話：2231 4810 或 2231 4835)及規劃署的規劃資料查詢處(熱線：2231 5000) (香港北角渣華道 333 號北角政府合署 17 樓及新界沙田上禾輋路 1 號沙田政府合署 14 樓)索取。

3. This form can be downloaded from the Board's website, and obtained from the Secretariat of the Board and the Planning Enquiry Counters of the Planning Department. The form should be typed or completed in block letters. The processing of the application may be refused if the required information or the required copies are incomplete.
此表格可從委員會的網頁下載，亦可向委員會秘書處及規劃署的規劃資料查詢處索取。申請人須以打印方式或以正楷填寫表格。如果申請人所提交的資料或文件副本不齊全，委員會可拒絕處理有關申請。

1. Name of Applicant 申請人姓名/名稱

(☐ Mr. 先生 / ☐ Mrs. 夫人 / ☐ Miss 小姐 / ☐ Ms. 女士 / ☑ Company 公司 / ☐ Organisation 機構)

Loi Loi Leisure Farm Limited 來來休閒農莊有限公司

2. Name of Authorised Agent (if applicable) 獲授權代理人姓名/名稱（如適用）

(☐ Mr. 先生 / ☐ Mrs. 夫人 / ☐ Miss 小姐 / ☐ Ms. 女士 / ☑ Company 公司 / ☐ Organisation 機構)

R-riches Property Consultants Limited 盈卓物業顧問有限公司

3. Application Site 申請地點

(a) Full address / location / demarcation district and lot number (if applicable) 詳細地址／地點／丈量約份及地段號碼（如適用）	Lots 1750A4 RP (Part), 1750A5 RP (Part) and 1750A6 RP (Part) in D.D. 107, Kam Tin, Yuen Long, New Territories
(b) Site area and/or gross floor area involved 涉及的地盤面積及／或總樓面面積	☑Site area 地盤面積 9,375 sq.m 平方米☑About 約 ☑Gross floor area 總樓面面積 2,208 sq.m 平方米☑About 約
(c) Area of Government land included (if any) 所包括的政府土地面積（倘有）	N/A sq.m 平方米 ☐About 約

(d) Name and number of the related statutory plan(s) 有關法定圖則的名稱及編號	Approved Kam Tin North Outline Zoning Plan No. S/YL-KTN/11
(e) Land use zone(s) involved 涉及的土地用途地帶	"Agriculture" ("AGR")
(f) Current use(s) 現時用途	Place of Recreation, Sports or Culture (Hobby Farm and Prawning Ground, Barbecue Site) Shop and Services and Holiday Camp with Ancillary Facilities (If there are any Government, institution or community facilities, please illustrate on plan and specify the use and gross floor area) (如有任何政府、機構或社區設施，請在圖則上顯示，並註明用途及總樓面面積)

4. "Current Land Owner" of Application Site 申請地點的「現行土地擁有人」

The applicant 申請人 –

☐ is the sole "current land owner"#& (please proceed to Part 6 and attach documentary proof of ownership).
是唯一的「現行土地擁有人」#&(請繼續填寫第 6 部分，並夾附業權證明文件)。

☐ is one of the "current land owners"#& (please attach documentary proof of ownership).
是其中一名「現行土地擁有人」#&(請夾附業權證明文件)。

☑ is not a "current land owner"#.
並不是「現行土地擁有人」#。

☐ The application site is entirely on Government land (please proceed to Part 6).
申請地點完全位於政府土地上（請繼續填寫第 6 部分）。

5. Statement on Owner's Consent/Notification 就土地擁有人的同意/通知土地擁有人的陳述

(a) According to the record(s) of the Land Registry as at ..... (DD/MM/YYYY), this application involves a total of ..... "current land owner(s) "#.
根據土地註冊處截至 ..... 年 ..... 月 ..... 日的記錄，這宗申請共牽涉 ..... 名「現行土地擁有人」#。

(b) The applicant 申請人 –

☐ has obtained consent(s) of ..... "current land owner(s)"#.
已取得 ..... 名「現行土地擁有人」#的同意。

Details of consent of "current land owner(s)"# obtained 取得「現行土地擁有人」#同意的詳情		
No. of 'Current Land Owner(s)' 「現行土地擁有人」數目	Lot number/address of premises as shown in the record of the Land Registry where consent(s) has/have been obtained 根據土地註冊處記錄已獲得同意的地段號碼／處所地址	Date of consent obtained (DD/MM/YYYY) 取得同意的日期 (日/月/年)

(Please use separate sheets if the space of any box above is insufficient. 如上列任何方格的空間不足，請另頁說明)

☐ has notified ..... "current land owner(s)"#
已通知 ..... 名「現行土地擁有人」#。

Details of the "current land owner(s)" # notified 已獲通知「現行土地擁有人」#的詳細資料		
No. of 'Current Land Owner(s)' 「現行土地擁有人」數目	Lot number/address of premises as shown in the record of the Land Registry where notification(s) has/have been given 根據土地註冊處記錄已發出通知的地段號碼／處所地址	Date of notification given (DD/MM/YYYY) 通知日期(日/月/年)

(Please use separate sheets if the space of any box above is insufficient. 如上列任何方格的空間不足，請另頁說明)

☑ has taken reasonable steps to obtain consent of or give notification to owner(s):
已採取合理步驟以取得土地擁有人的同意或向該人發給通知。詳情如下：

Reasonable Steps to Obtain Consent of Owner(s) 取得土地擁有人的同意所採取的合理步驟

☐ sent request for consent to the "current land owner(s)" on _____ (DD/MM/YYYY)#&
於_____(日/月/年)向每一名「現行土地擁有人」#郵遞要求同意書&

Reasonable Steps to Give Notification to Owner(s) 向土地擁有人發出通知所採取的合理步驟

☐ published notices in local newspapers on _____ (DD/MM/YYYY)&
於_____(日/月/年)在指定報章就申請刊登一次通知&

☑ posted notice in a prominent position on or near application site/premises on 24/07/2024 - 07/08/2024 (DD/MM/YYYY)&
於_____(日/月/年)在申請地點／申請處所或附近的顯明位置貼出關於該申請的通知&

☑ sent notice to relevant owners' corporation(s)/owners' committee(s)/mutual aid committee(s)/management office(s) or rural committee on 13/08/2024 (DD/MM/YYYY)&
於_____(日/月/年)把通知寄往相關的業主立案法團/業主委員會/互助委員會或管理處，或有關的鄉事委員會&

Others 其他

☐ others (please specify)
其他（請指明）

_____

_____

_____

_____

Note: May insert more than one「✔」.
Information should be provided on the basis of each and every lot (if applicable) and premises (if any) in respect of the application.
註: 可在多於一個方格內加上「✔」號
申請人須就申請涉及的每一地段（倘適用）及處所（倘有）分別提供資料

6. Type(s) of Application 申請類別

(A) Temporary Use/Development of Land and/or Building Not Exceeding 3 Years in Rural Areas or Regulated Areas
位於鄉郊地區或受規管地區土地上及/或建築物內進行為期不超過三年的臨時用途/發展
(For Renewal of Permission for Temporary Use or Development in Rural Areas or Regulated Areas, please proceed to Part (B))
(如屬位於鄉郊地區或受規管地區臨時用途/發展的規劃許可續期，請填寫(B)部分)

(a) Proposed use(s)/development 擬議用途/發展	Temporary Place of Recreation, Sports or Culture (Hobby Farm, Fishing and Prawning Ground, Barbecue Site), Shop and Services and Holiday Camp with Ancillary Facilities for a Period of 3 Years and Associated Filling of Land (Please illustrate the details of the proposal on a layout plan) (請用平面圖說明擬議詳情)
(b) Effective period of permission applied for 申請的許可有效期	☑ year(s) 年 ..... 3 ..... ☐ month(s) 個月 .....

(c) Development Schedule 發展細節表

Proposed uncovered land area 擬議露天土地面積	7,167 sq.m ☑About 約
Proposed covered land area 擬議有上蓋土地面積	2,208 sq.m ☑About 約
Proposed number of buildings/structures 擬議建築物／構築物數目	24
Proposed domestic floor area 擬議住用樓面面積	N/A sq.m ☐About 約
Proposed non-domestic floor area 擬議非住用樓面面積	2,208 sq.m ☑About 約
Proposed gross floor area 擬議總樓面面積	2,208 sq.m ☑About 約

Proposed height and use(s) of different floors of buildings/structures (if applicable) 建築物/構築物的擬議高度及不同樓層的擬議用途 (如適用) (Please use separate sheets if the space below is insufficient) (如以下空間不足，請另頁說明)

Please refer to Plan 5.

Proposed number of car parking spaces by types 不同種類停車位的擬議數目

Private Car Parking Spaces 私家車車位	20
Motorcycle Parking Spaces 電單車車位	N/A
Light Goods Vehicle Parking Spaces 輕型貨車泊車位	N/A
Medium Goods Vehicle Parking Spaces 中型貨車泊車位	N/A
Heavy Goods Vehicle Parking Spaces 重型貨車泊車位	N/A
Others (Please Specify) 其他 (請列明)	

Proposed number of loading/unloading spaces 上落客貨車位的擬議數目

Taxi Spaces 的士車位	N/A
Coach Spaces 旅遊巴車位	N/A
Light Goods Vehicle Spaces 輕型貨車車位	1
Medium Goods Vehicle Spaces 中型貨車車位	N/A
Heavy Goods Vehicle Spaces 重型貨車車位	N/A
Others (Please Specify) 其他 (請列明)	Light Bus: 1

Proposed operating hours 擬議營運時間
09:00 to 22:00 daily, including public holiday (except for overnight tent camping activities).

(d) Any vehicular access to the site/subject building? 是否有車路通往地盤／有關建築物？	Yes 是	☑ There is an existing access. (please indicate the street name, where appropriate) 有一條現有車路。(請註明車路名稱(如適用)) Accessible from Chi Ho Road via a local access ☐ There is a proposed access. (please illustrate on plan and specify the width) 有一條擬議車路。（請在圖則顯示，並註明車路的闊度）
	No 否	☐

(e) Impacts of Development Proposal 擬議發展計劃的影響
(If necessary, please use separate sheets to indicate the proposed measures to minimise possible adverse impacts or give justifications/reasons for not providing such measures. 如需要的話，請另頁註明可盡量減少可能出現不良影響的措施，否則請提供理據/理由。)

(i) Does the development proposal involve alteration of existing building? 擬議發展計劃是否包括現有建築物的改動?	Yes 是	☐ Please provide details 請提供詳情
	No 否	☑
(ii) Does the development proposal involve the operation on the right? 擬議發展是否涉及右列的工程?	Yes 是	☑ (Please indicate on site plan the boundary of concerned land/pond(s), and particulars of stream diversion, the extent of filling of land/pond(s) and/or excavation of land) (請用地盤平面圖顯示有關土地／池塘界線，以及河道改道、填塘、填土及／或挖土的細節及/或範圍) ☐ Diversion of stream 河道改道 ☐ Filling of pond 填塘 Area of filling 填塘面積 ..... sq.m 平方米 ☐About 約 Depth of filling 填塘深度 ..... m 米 ☐About 約 ☑ Filling of land 填土 Area of filling 填土面積 ....5,672.... sq.m 平方米 ☑About 約 Depth of filling 填土厚度 ..not more than 0.2.. m 米 ☐About 約 ☐ Excavation of land 挖土 Area of excavation 挖土面積..... sq.m 平方米 ☐About 約 Depth of excavation 挖土深度 .....m 米 ☐About 約
	No 否	☐

(iii) Would the development proposal cause any adverse impacts? 擬議發展計劃會否造成不良影響？	On environment 對環境	Yes 會 ☐	No 不會 ☑
	On traffic 對交通	Yes 會 ☐	No 不會 ☑
	On water supply 對供水	Yes 會 ☐	No 不會 ☑
	On drainage 對排水	Yes 會 ☐	No 不會 ☑
	On slopes 對斜坡	Yes 會 ☐	No 不會 ☑
	Affected by slopes 受斜坡影響	Yes 會 ☐	No 不會 ☑
	Landscape Impact 構成景觀影響	Yes 會 ☐	No 不會 ☑
	Tree Felling 砍伐樹木	Yes 會 ☐	No 不會 ☑
	Visual Impact 構成視覺影響	Yes 會 ☐	No 不會 ☑
	Others (Please Specify) 其他 (請列明)	Yes 會 ☐	No 不會 ☑

	Please state measure(s) to minimise the impact(s). For tree felling, please state the number, diameter at breast height and species of the affected trees (if possible) 請註明盡量減少影響的措施。如涉及砍伐樹木，請說明受影響樹木的數目、及胸高度的樹幹直徑及品種(倘可) ....

(B) Renewal of Permission for Temporary Use or Development in Rural Areas or Regulated Areas 位於鄉郊地區或受規管地區臨時用途/發展的許可續期	
(a) Application number to which the permission relates 與許可有關的申請編號	A/_____/_____
(b) Date of approval 獲批給許可的日期	..... (DD 日/MM 月/YYYY 年)
(c) Date of expiry 許可屆滿日期	..... (DD 日/MM 月/YYYY 年)
(d) Approved use/development 已批給許可的用途／發展	
(e) Approval conditions 附帶條件	☐ The permission does not have any approval condition 許可並沒有任何附帶條件 ☐ Applicant has complied with all the approval conditions 申請人已履行全部附帶條件 ☐ Applicant has not yet complied with the following approval condition(s): 申請人仍未履行下列附帶條件： _____ _____ _____ Reason(s) for non-compliance: 仍未履行的原因： _____ _____ _____ (Please use separate sheets if the space above is insufficient) (如以上空間不足，請另頁說明)
(f) Renewal period sought 要求的續期期間	☐ year(s) 年 ..... ☐ month(s) 個月 .....

7. Justifications 理由

The applicant is invited to provide justifications in support of the application. Use separate sheets if necessary.
現請申請人提供申請理由及支持其申請的資料。如有需要，請另頁說明）。

Please refer to the supplementary statement.

8. Declaration 聲明

I hereby declare that the particulars given in this application are correct and true to the best of my knowledge and belief.
本人謹此聲明，本人就這宗申請提交的資料，據本人所知及所信，均屬真實無誤。

I hereby grant a permission to the Board to copy all the materials submitted in this application and/or to upload such materials to the Board's website for browsing and downloading by the public free-of-charge at the Board's discretion.
本人現准許委員會酌情將本人就此申請所提交的所有資料複製及/或上載至委員會網站，供公眾免費瀏覽或下載。

Signature 簽署 ..... ☐ Applicant 申請人 / ☑ Authorised Agent 獲授權代理人

Michael WONG
....
Name in Block Letters 姓名（請以正楷填寫） Position (if applicable) 職位 （如適用）

Professional Qualification(s) 專業資格
☐ Member 會員 / ☐ Fellow of 資深會員
☐ HKIP 香港規劃師學會 / ☐ HKIA 香港建築師學會 /
☐ HKIS 香港測量師學會 / ☐ HKIE 香港工程師學會 /
☐ HKILA 香港園境師學會/ ☐ HKIUD 香港城市設計學會
☐ RPP 註冊專業規劃師
Others 其他 .....

on behalf of 代表 R-riches Property Consultants Limited 盈卓物業顧問有限公司 .....
☑ Company 公司 / ☐ Organisation Name and Chop (if applicable) 機構名稱及蓋章（如適用）

Date 日期 22/08/2024 ..... (DD/MM/YYYY 日/月/年)

Remark 備註

The materials submitted in this application and the Board's decision on the application would be disclosed to the public. Such materials would also be uploaded to the Board's website for browsing and free downloading by the public where the Board considers appropriate.
委員會會向公眾披露申請人所遞交的申請資料和委員會對申請所作的決定。在委員會認為合適的情況下，有關申請資料亦會上載至委員會網頁供公眾免費瀏覽及下載。

Warning 警告

Any person who knowingly or wilfully makes any statement or furnish any information in connection with this application, which is false in any material particular, shall be liable to an offence under the Crimes Ordinance.
任何人在明知或故意的情況下，就這宗申請提出在任何要項上是虛假的陳述或資料，即屬違反《刑事罪行條例》。

Statement on Personal Data 個人資料的聲明

1. The personal data submitted to the Board in this application will be used by the Secretary of the Board and Government departments for the following purposes:
委員會就這宗申請所收到的個人資料會交給委員會秘書及政府部門，以根據《城市規劃條例》及相關的城市規劃委員會規劃指引的規定作以下用途：
   (a) the processing of this application which includes making available the name of the applicant for public inspection when making available this application for public inspection; and
   處理這宗申請，包括公布這宗申請供公眾查閱，同時公布申請人的姓名供公眾查閱；以及
   (b) facilitating communication between the applicant and the Secretary of the Board/Government departments.
   方便申請人與委員會秘書及政府部門之間進行聯絡。

2. The personal data provided by the applicant in this application may also be disclosed to other persons for the purposes mentioned in paragraph 1 above.
申請人就這宗申請提供的個人資料，或亦會向其他人士披露，以作上述第 1 段提及的用途。

3. An applicant has a right of access and correction with respect to his/her personal data as provided under the Personal Data (Privacy) Ordinance (Cap. 486). Request for personal data access and correction should be addressed to the Secretary of the Board at 15/F, North Point Government Offices, 333 Java Road, North Point, Hong Kong.
根據《個人資料(私隱)條例》(第 486 章)的規定，申請人有權查閱及更正其個人資料。如欲查閱及更正個人資料，應向委員會秘書提出有關要求，其地址為香港北角渣華道 333 號北角政府合署 15 樓。

Gist of Application 申請摘要

(Please provide details in both English and Chinese as far as possible. This part will be circulated to relevant consultees, uploaded to the Town Planning Board's Website for browsing and free downloading by the public and available at the Planning Enquiry Counters of the Planning Department for general information.)
(請盡量以英文及中文填寫。此部分將會發送予相關諮詢人士、上載至城市規劃委員會網頁供公眾免費瀏覽及下載及於規劃署規劃資料查詢處供一般參閱。)

Application No. 申請編號	(For Official Use Only) (請勿填寫此欄)
Location/address 位置／地址	Lots 1750A4 RP (Part), 1750A5 RP (Part) and 1750A6 RP (Part) in D.D. 107, Kam Tin, Yuen Long, New Territories
Site area 地盤面積	9,375 sq. m 平方米 ☑ About 約 (includes Government land of 包括政府土地 N/A sq. m 平方米 ☐ About 約)
Plan 圖則	Approved Kam Tin North Outline Zoning Plan No. S/YL-KTN/11
Zoning 地帶	"Agriculture" ("AGR")
Type of Application 申請類別	☑ Temporary Use/Development in Rural Areas or Regulated Areas for a Period of 位於鄉郊地區或受規管地區的臨時用途/發展為期 ☑ Year(s) 年 3 ☐ Month(s) 月 _____ ☐ Renewal of Planning Approval for Temporary Use/Development in Rural Areas or Regulated Areas for a Period of 位於鄉郊地區或受規管地區臨時用途/發展的規劃許可續期為期 ☐ Year(s) 年 _____ ☐ Month(s) 月 _____
Applied use/ development 申請用途/發展	Temporary Place of Recreation, Sports or Culture (Hobby Farm, Fishing and Prawning Ground, Barbecue Site), Shop and Services and Holiday Camp with Ancillary Facilities for a Period of 3 Years and Associated Filling of Land

(i) Gross floor area and/or plot ratio 總樓面面積及／或地積比率		sq.m 平方米	Plot Ratio 地積比率
	Domestic 住用	N/A ☐ About 約 ☐ Not more than 不多於	N/A ☐About 約 ☐Not more than 不多於
	Non-domestic 非住用	2,208 ☑ About 約 ☐ Not more than 不多於	0.24 ☑About 約 ☐Not more than 不多於
(ii) No. of blocks 幢數	Domestic 住用	N/A	
	Non-domestic 非住用	24	
(iii) Building height/No. of storeys 建築物高度／層數	Domestic 住用	N/A	m 米 ☐ (Not more than 不多於)
		N/A	Storeys(s) 層 ☐ (Not more than 不多於)
	Non-domestic 非住用	2.8m - 5m (about)	m 米 ☐ (Not more than 不多於)
		1	Storeys(s) 層 ☐ (Not more than 不多於)
(iv) Site coverage 上蓋面積	24 % ☑ About 約		
(v) No. of parking spaces and loading / unloading spaces 停車位及上落客貨車位數目	Total no. of vehicle parking spaces 停車位總數	20	
	Private Car Parking Spaces 私家車車位	20	
	Motorcycle Parking Spaces 電單車車位	N/A	
	Light Goods Vehicle Parking Spaces 輕型貨車泊車位	N/A	
	Medium Goods Vehicle Parking Spaces 中型貨車泊車位	N/A	
	Heavy Goods Vehicle Parking Spaces 重型貨車泊車位	N/A	
	Others (Please Specify) 其他 (請列明)		
	Total no. of vehicle loading/unloading bays/lay-bys 上落客貨車位／停車處總數	2	
	Taxi Spaces 的士車位	N/A	
	Coach Spaces 旅遊巴車位	N/A	
	Light Goods Vehicle Spaces 輕型貨車車位	1	
	Medium Goods Vehicle Spaces 中型貨車位	N/A	
	Heavy Goods Vehicle Spaces 重型貨車車位	N/A	
	Others (Please Specify) 其他 (請列明)		
	Light Bus:	1	

Submitted Plans, Drawings and Documents 提交的圖則、繪圖及文件	Chinese 中文	English 英文
Plans and Drawings 圖則及繪圖		
Master layout plan(s)/Layout plan(s) 總綱發展藍圖／布局設計圖	☐	☑
Block plan(s) 樓宇位置圖	☐	☐
Floor plan(s) 樓宇平面圖	☐	☐
Sectional plan(s) 截視圖	☐	☐
Elevation(s) 立視圖	☐	☐
Photomontage(s) showing the proposed development 顯示擬議發展的合成照片	☐	☐
Master landscape plan(s)/Landscape plan(s) 園境設計總圖／園境設計圖	☐	☐
Others (please specify) 其他（請註明）	☐	☑
Location plan, Zoning plan, Plan showing land status of the site, Plan showing the area of filling of land, Swept path analysis, Paved Ratio Plan		
Reports 報告書		
Planning Statement/Justifications 規劃綱領/理據	☐	☑
Environmental assessment (noise, air and/or water pollutions) 環境評估（噪音、空氣及／或水的污染）	☐	☐
Traffic impact assessment (on vehicles) 就車輛的交通影響評估	☐	☐
Traffic impact assessment (on pedestrians) 就行人的交通影響評估	☐	☐
Visual impact assessment 視覺影響評估	☐	☐
Landscape impact assessment 景觀影響評估	☐	☐
Tree Survey 樹木調查	☐	☐
Geotechnical impact assessment 土力影響評估	☐	☐
Drainage impact assessment 排水影響評估	☐	☐
Sewerage impact assessment 排污影響評估	☐	☐
Risk Assessment 風險評估	☐	☐
Others (please specify) 其他（請註明）	☐	☐

Note: May insert more than one「✔」. 註：可在多於一個方格內加上「✔」號

Note: The information in the Gist of Application above is provided by the applicant for easy reference of the general public. Under no circumstances will the Town Planning Board accept any liabilities for the use of the information nor any inaccuracies or discrepancies of the information provided. In case of doubt, reference should always be made to the submission of the applicant.

註： 上述申請摘要的資料是由申請人提供以方便市民大眾參考。對於所載資料在使用上的問題及文義上的歧異，城市規劃委員會概不負責。若有任何疑問，應查閱申請人提交的文件。

Supplementary Statement

1) Background

1.1 The applicant seeks planning permission from the Town Planning Board (the Board) to use *Various Lots in D.D. 107, Kam Tin, Yuen Long, New Territories* (the Site) for '**Temporary Place of Recreation, Sports or Culture (Hobby Farm, Fishing and Prawning Ground, Barbecue Site), Shop and Services and Holiday Camp with Ancillary Facilities for a Period of 3 Years and Associated Filling of Land**' (proposed development) (**Plan 1**).

1.2 Due to the limited number of venues for recreational activities in the rural area of New Territories, locals living in the New Territories often require travelling to the urban area of Hong Kong to participate the aforesaid activities. This undoubtedly causes inconvenience for the locals. In view of this, the applicant would like to continue to use the Site for the applied use to alleviate the pressing demand of such use, in order to better serve the nearby locals.

2) Planning Context

2.1 The Site currently falls within an area zoned as "Agriculture" ("AGR") on the Approved Kam Tin North Outline Zoning Plan (OZP) No.: S/YL-KTN/11 (**Plan 2**). According to the Notes of the OZP, the applied uses are not column 1 use within the "AGR" zone, which requires planning permission from the Board.

2.2 The proposed development with low-rise structures is considered not incompatible with the surrounding areas, which are dominated by vacant land, sites occupied by temporary structures for agricultural and recreational uses and open storage yards. Although the Site is zoned as "AGR", there is no active agricultural activity within the Site. Approval of the planning application on a temporary basis of 3 years would not frustrate the long-term planning intention of the "AGR" zone and would better utilize the precious land resources in the New Territories.

2.3 Furthermore, similar S.16 planning applications for *'place of recreation, sports or culture'*, *'barbecue site'*, *'holiday camp' and 'shop and services'* uses were also approved by the Board within the same "AGR" zone, which the latest application (No. A/YL-KTN/859) was approved by the Board on a temporary basis for 3 years in 2022. Therefore, approval of the current application would not set an undesirable precedent within the "AGR" zone.

2.4 The Site is the subject of 3 previous S.16 planning applications, in which the latest planning application (No. A/YL-KTN/844) for *'place of recreation, sports or culture'*, *'hobby farm'*, *'prawning ground'*, *'barbecue site'* and *'holiday camp'* uses (that were submitted by the same applicant as the current application), was approved by the Board in 2022, therefore, approval of the current application is in line with the Board's previous decisions. When compared to the previous application (No. A/YL-KTN/844), the major development parameters and operation mode remain the same. The applicant has made effort to comply with approval conditions of the previous application, details are shown at **Table 1** below:

Table 1 – Details of Compliance with Approval Condition of the Previous Application

Approval Conditions of Application No. A/YL-KTN/844		**Date of Compliance**
(b)	The implementation of the accepted drainage proposal	Not complied with
(d)	The submission of a fire service installations (FSIs) proposal	10/5/2023
(e)	The implementation of the FSIs proposal	Not complied with

2.5 During the operation of the previous application, the applicant has implemented part of the accepted drainage and FSIs proposals. However, due to the reduced number of visitors at the Site, the applicant did not have sufficient funding to complete the remaining phase of the drainage facilities and FSIs, hence, the construction works were temporarily put on hold. In order to increase the revenue of the Site, the applicant intends to rearrange the layout of the Site (i.e. reduced the tent camping and hobby farm area to reduce overall maintenance costs) and to include a new *'shop and services (fresh provision shop)'* for barbecue activities. With the new source of revenue, the applicant intends to complete works for the remaining phase of drainage and FSIs during the planning approval period of the current application. In support of the application, the applicant has submitted the accepted drainage and FSIs proposals to minimize impact to the surrounding areas (**Appendices I** and **II**).

3) Development Proposal

3.1 The Site occupies an area of 9,375 m^2 (about) (**Plan 3**). The operation hours of the Site are from 09:00 to 22:00 daily, including public holidays (except for overnight camping activities). A total of 24 structures are proposed at the Site for rain shelter for barbecue activities, rain shelter for children playing area, rain shelter for prawning, rain shelter for fishing, rain shelter for parking space, activities rooms, rain shelters, shop and services, reception and storage of

tools, portable toilets and meter room with total GFA of 2,208 m^2 (**Plans 4** and **5**). Major development parameters are shown at **Table 2** below:

Table 2 - Major Development Parameters

Application Site Area	9,375 m^2 (about)
Covered Area	2,208m^2 (about)
Uncovered Area	7,167 m^2 (about)
Plot Ratio	0.24 (about)
Site Coverage	24% (about)
Number of Structure	24
Total GFA - *Domestic GFA* - *Non-Domestic GFA*	2,208m^2 (about) *Not applicable* 2,208m^2 (about)
Building Height	2.8 m – 5 m (about)
No. of Storey	1

3.2 It is estimated that 8 staff will work at the Site, which two staff will station at the Site overnight to handle potential complaints arising from the proposed development. It is estimated that the proposed development would be able to attract not more than 70 visitors per day. Visitor is required to make appointment in advance to access the Site, which could help to prevent excessive number of visitors and affect the public. Walk-in visitors will not be served.

3.3 Portion of the Site is reserved as lawn area for tent camping area and open space (1,921m^2), where various sports activities (i.e. playing football and badminton) and camping activities (i.e. about 20 tents with not more than 2 visitors per tent) are carried out. Furthermore, 661m^2 (about) is proposed as hobby farm for visitors to promote organic farming. As no eating place is provided in close vicinity of the Site, barbecue area (i.e. about 35 barbecue pits) will be provided at the Site for visitor to support the operation of the proposed development. Crops harvested from the hobby farming, fish and prawns from fishing and prawning, and raw meat from the proposed shop and services are the major food sources for barbecue activities at the Site. The existing structures B14 and B15 are available for visitors to conduct various types of recreational, sports or cultural activities, i.e. dancing, painting, drawing and yoga classes etc.

3.4 An area of 5,672 m^2 (about) have already been filled with concrete (i.e. about 4,042 m^2) and

gravel (i.e. about 1,630 m^2) with existing site level ranges from +3.9mPD to +4.3mPD. (**Plan 6**). The hard-paved area is intended to facilitate a flat surface for site formation of structures, children playing area, parking and loading/unloading (L/UL) spaces and circulation area. Therefore, the associated filling of land area is considered necessary and has been kept to minimal for the operation of the proposed development. No further filling of land will be carried out at the Site at any time during the planning approval period.

3.5 The Site is accessible from Chi Ho Road via a local access (**Plan 1**). A total of 22 parking and L/UL spaces are provided at the Site for staff and visitors, details are shown at **Table 3** below:

Table 3– Parking and L/UL Provision of the Proposed Development

Type of Space	No. of Space
Private Car (PC) Parking Space for Staff - *2.5 m (W) x 5 m (L)*	4
PC Parking Space for Visitor - *2.5 m (W) x 5 m (L)*	16
L/UL Space for Light Goods Vehicle (LGV) - *3.5 m (W) x 7 m (L)*	1
L/UL Space for Light Bus (LB) - *3 m (W) x 8 m (L)*	1

3.6 L/UL space for light bus is provided for visitors who are travelling together in groups. 5.5 tonnes lorry will be deployed for the transportation of goods and garage to support the operation. Sufficient space is provided for vehicle to smoothly manouvre within the Site to ensure no vehicle will queue back to or reverse onto/from the Site to the public road (**Plan 7**). As trip generation and attraction of the proposed development is minimal (as shown at **Table 4** below), adverse traffic impact to the surrounding road network should not be anticipated.

Table 4 – Trip Generation and Attraction of the Proposed Development

Time Period	Trip Generation and Attraction						
	PC		LGV		LB		2-Way Total
	In	Out	In	Out	In	Out	
07:00 – 08:00	2	1	0	0	0	0	3
08:00 – 09:00*	**0**	**0**	**1**	**1**	**0**	**0**	**2**
09:00 – 10:00	0	2	0	0	0	0	2
10:00 – 11:00	0	8	0	0	1	1	10
11:00 – 12:00	0	5	0	0	1	1	7

12:00 – 13:00	1	1	1	1	0	0	4
13:00 – 14:00	1	0	0	0	0	0	1
14:00 – 15:00	7	1	0	0	1	1	10
15:00 – 16:00	6	0	0	0	1	1	8
16:00 – 17:00	2	0	0	0	0	0	2
17:00 – 18:00*	**1**	**0**	**1**	**1**	**0**	**0**	**3**
18:00 – 19:00	1	1	0	0	0	0	2
19:00 – 20:00	0	0	0	0	0	0	0
20:00 – 21:00	0	0	0	0	0	0	0
21:00 – 22:00	0	1	0	0	0	0	1

*AM and PM Peak hours of the day

3.7 The applicant will strictly follow the '*Code of Practice on Handling the Environmental Aspects of Temporary Uses and Open Storage Sites*' by the EPD to minimize all possible environmental impacts on the nearby sensitive receivers. The applicant will follow the *Professional Persons Environmental Consultative Committee Practice Notes* (ProPECCPNs) for sewage treatment at the Site. No public announcement system or any form of audio amplification system will be used at the Site during the planning approval period.

4) Conclusion

4.1 The proposed development will not create significant nuisance to the surrounding areas. Adequate mitigation measures are provided, i.e. the submission of the accepted drainage and FSIs proposals to mitigate any adverse impact arising from the proposed development (**Appendices I** and **II**).

4.2 In view of the above, the Board is hereby respectfully recommended to approve the subject application for '**Temporary Place of Recreation, Sports or Culture (Hobby Farm, Fishing and Prawning Ground, Barbecue Site), Shop and Services and Holiday Camp with Ancillary Facilities for a Period of 3 Years and Associated Filling of Land**'.

R-riches Property Consultants Limited

August 2024

LIST OF PLANS

APPENDICES

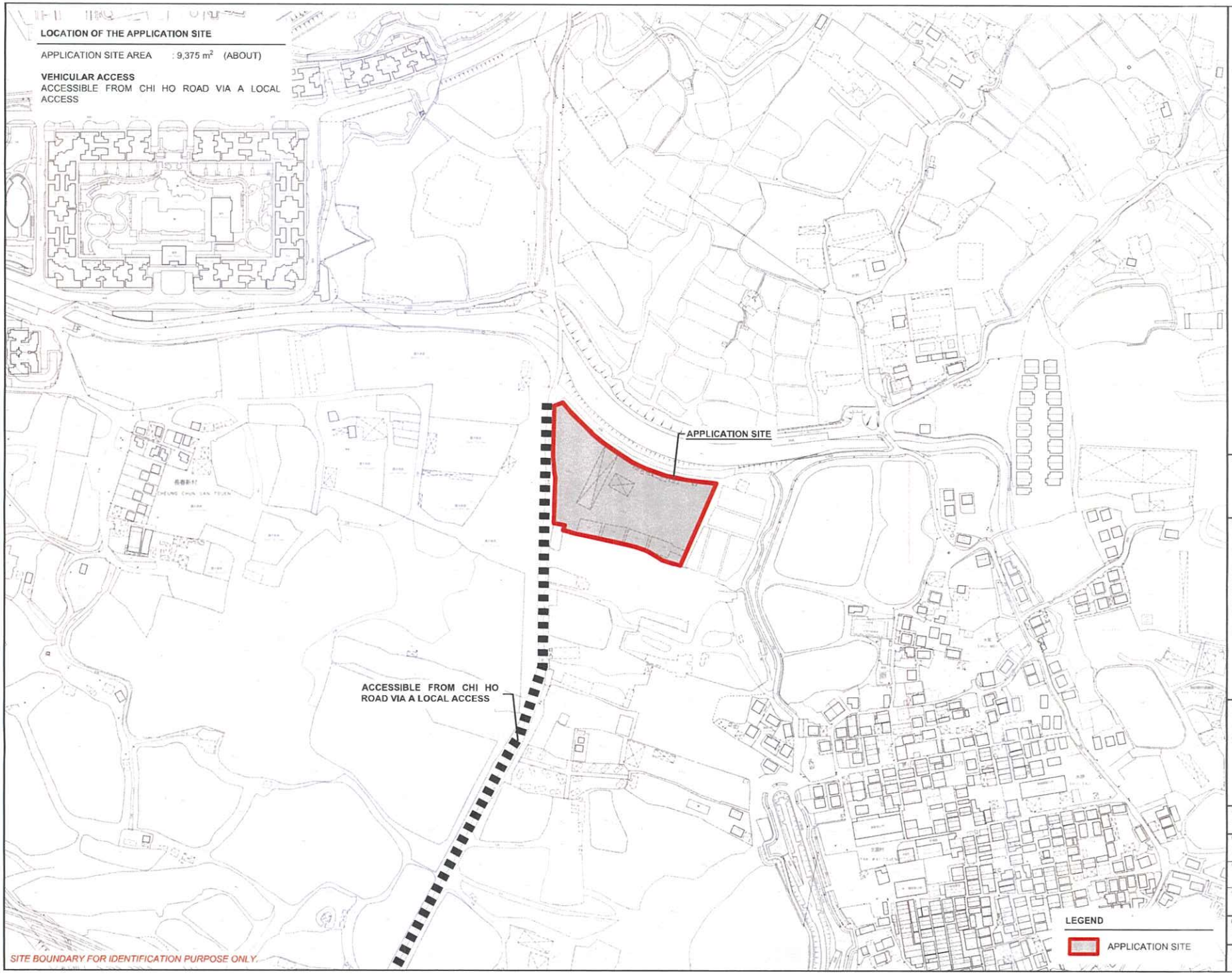

NORTH
W E
S

PLANNING CONSULTANT

R-Riches
Property Consultants Ltd.

PROJECT

TEMPORARY PLACE OF RECREATION, SPORTS OR CULTURE (HOBBY FARM, FISHING AND PRAWNING GROUND), BARBECUE SITE, HOLIDAY CAMP AND SHOP AND SERVICES WITH ANCILLARY FACILITIES FOR A PERIOD OF 3 YEARS AND ASSOCIATED FILLING OF LAND

SITE LOCATION

VARIOUS LOTS IN D.D. 107, KAM TIN, YUEN LONG, NEW TERRITORIES

SCALE	1 : 4000 @ A4
DRAWN BY	MN
DATE	12.8.2024
CHECKED BY	
DATE	
APPROVED BY	
DATE	
DWG. TITLE	LOCATION PLAN
DWG NO	PLAN 1
VER.	001

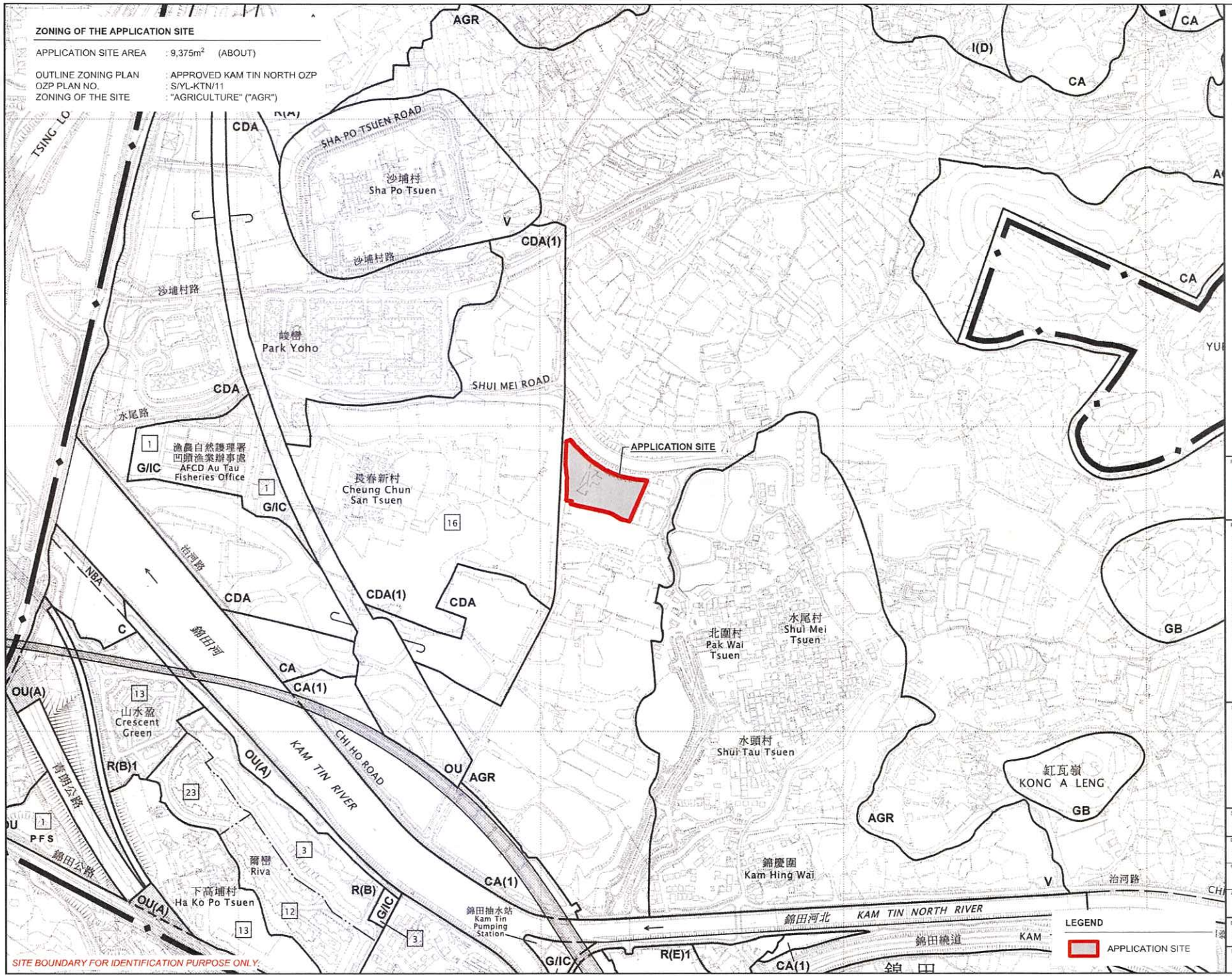

PLANNING CONSULTANT

R-Riches Property Consultants Ltd.

PROJECT

TEMPORARY PLACE OF RECREATION, SPORTS OR CULTURE (HOBBY FARM, FISHING AND PRAWNING GROUND), BARBECUE SITE, HOLIDAY CAMP AND SHOP AND SERVICES WITH ANCILLARY FACILITIES FOR A PERIOD OF 3 YEARS AND ASSOCIATED FILLING OF LAND

SITE LOCATION

VARIOUS LOTS IN D.D. 107, KAM TIN, YUEN LONG, NEW TERRITORIES

SCALE	1 : 8000 @ A4
DRAWN BY	MN
DATE	12.8.2024
CHECKED BY	
DATE	
APPROVED BY	
DATE	
DWG. TITLE	ZONING OF THE SITE
DWG NO.	PLAN 2
VER.	001

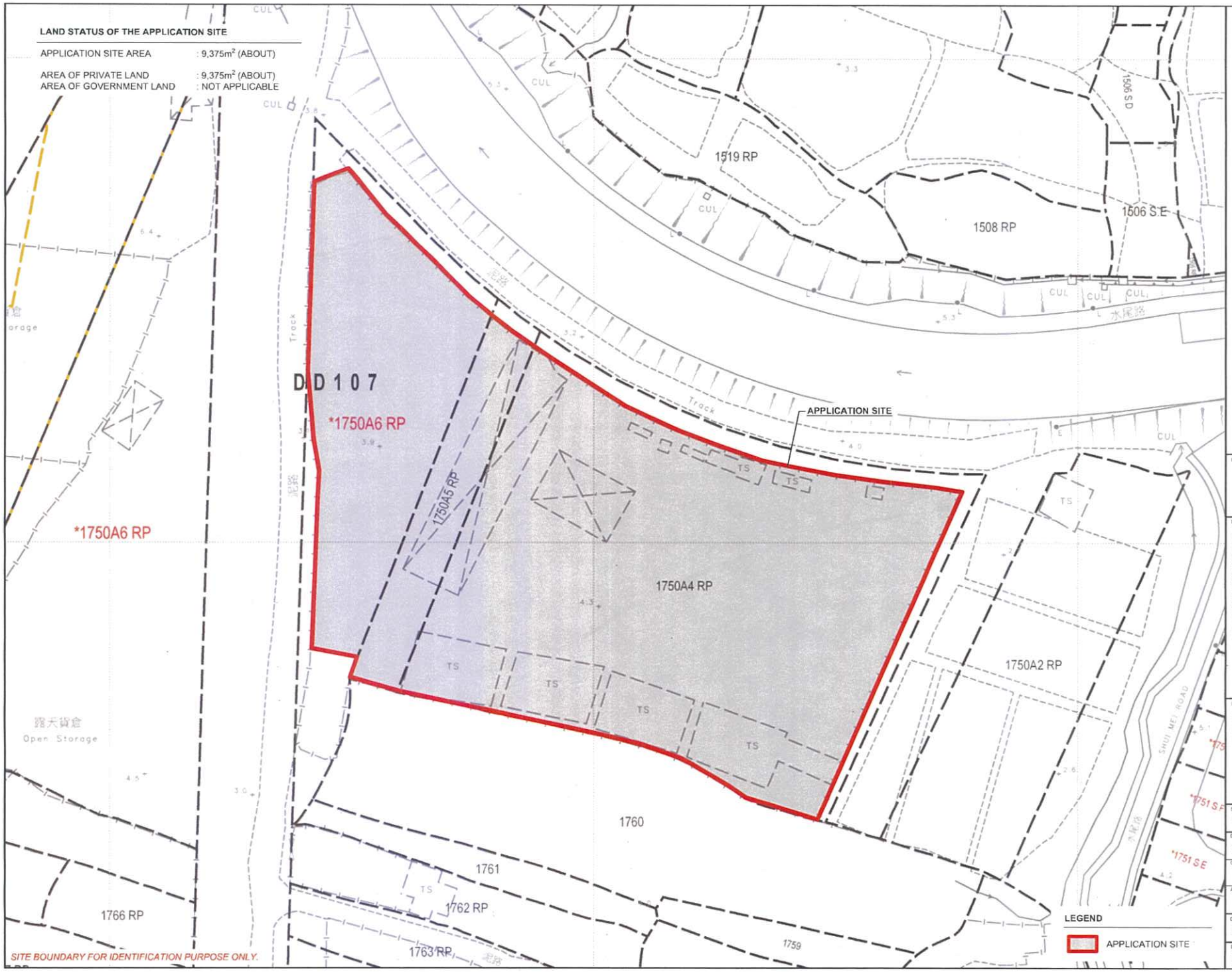

PLANNING CONSULTANT

R-Riches Property Consultants Ltd.

PROJECT

TEMPORARY PLACE OF RECREATION, SPORTS OR CULTURE (HOBBY FARM, FISHING AND PRAWNING GROUND), BARBECUE SITE, HOLIDAY CAMP AND SHOP AND SERVICES WITH ANCILLARY FACILITIES FOR A PERIOD OF 3 YEARS AND ASSOCIATED FILLING OF LAND

SITE LOCATION

VARIOUS LOTS IN D.D. 107, KAM TIN, YUEN LONG, NEW TERRITORIES

SCALE	1 : 1000 @ A4
DRAWN BY: MN	DATE: 12.8.2024
CHECKED BY	DATE
APPROVED BY	DATE
DWG. TITLE	LAND STATUS OF THE SITE
DWG NO.: PLAN 3	VER: 001

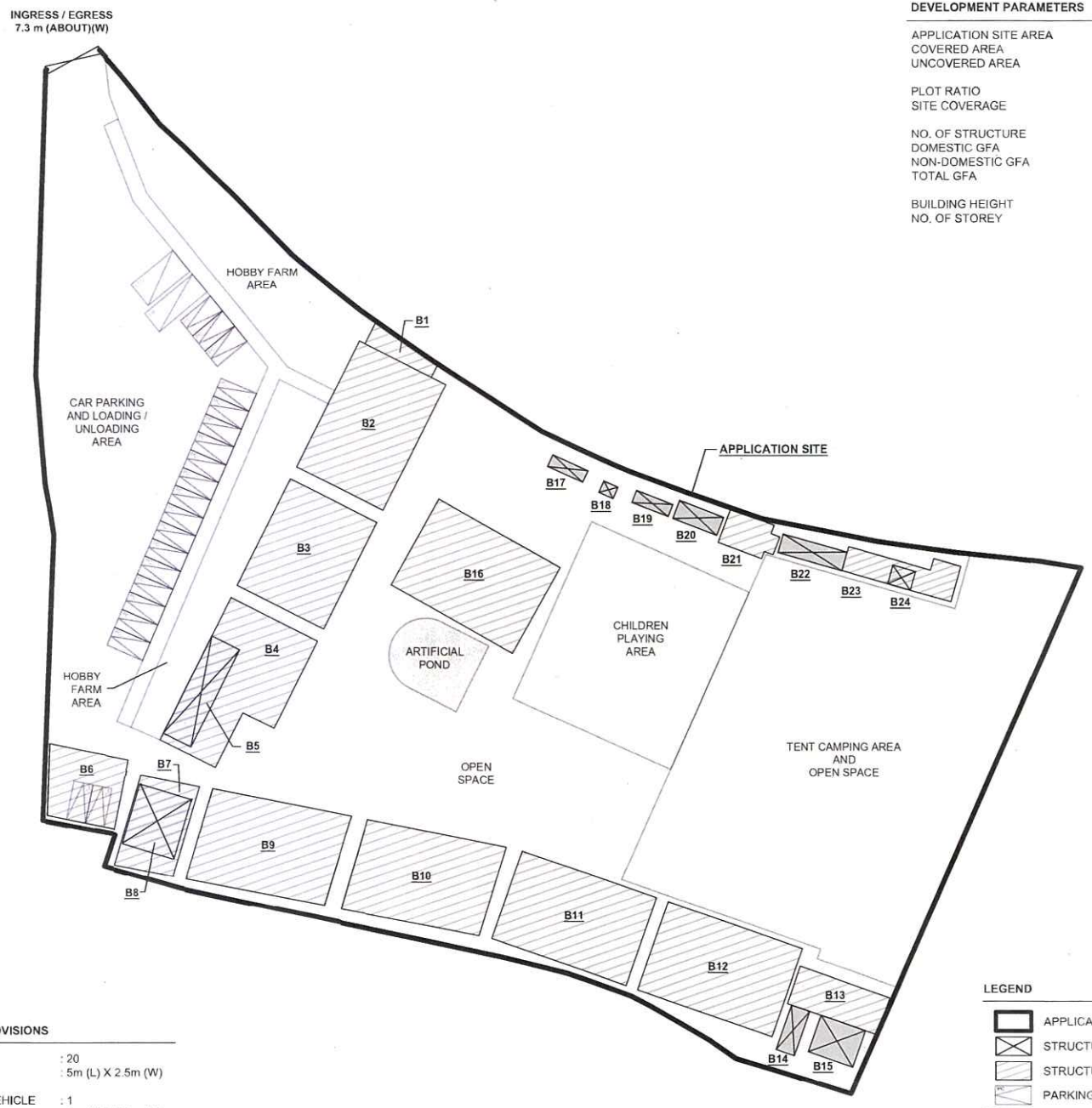

DEVELOPMENT PARAMETERS

APPLICATION SITE AREA	: 9,375 m^2	(ABOUT)
COVERED AREA	: 2,208 m^2	(ABOUT)
UNCOVERED AREA	: 7,167 m^2	(ABOUT)
PLOT RATIO	: 0.24	(ABOUT)
SITE COVERAGE	: 24 %	(ABOUT)
NO. OF STRUCTURE	: 24	
DOMESTIC GFA	: NOT APPLICABLE	
NON-DOMESTIC GFA	: 2,208 m^2	(ABOUT)
TOTAL GFA	: 2,208 m^2	(ABOUT)
BUILDING HEIGHT	: 2.8m - 5m	(ABOUT)
NO. OF STOREY	: 1	

PARKING AND LOADING/UNLOADING PROVISIONS

NO. OF PRIVATE CAR PARKING SPACE	: 20
DIMENSION OF PARKING SPACE	: 5m (L) X 2.5m (W)
NO. OF L/UL SPACE FOR LIGHT GOODS VEHICLE	: 1
DIMENSION OF L/UL SPACE	: 7m (L) X 3.5m (W)
NO. OF L/UL SPACE FOR LIGHT BUS	: 1
DIMENSION OF L/UL SPACE	: 8m (L) X 3m (W)

LEGEND

- APPLICATION SITE
- STRUCTURE (ENCLOSED)
- STRUCTURE (CANOPY)
- PARKING SPACE (PC)
- LOADING / UNLOADING SPACE (LGV)
- LOADING / UNLOADING SPACE (LB)
- INGRESS / EGRESS

NORTH
W E
S

PLANNING CONSULTANT

R-Riches Property Consultants Ltd.

PROJECT

TEMPORARY PLACE OF RECREATION, SPORTS OR CULTURE (HOBBY FARM, FISHING AND PRAWNING GROUND), BARBECUE SITE, HOLIDAY CAMP AND SHOP AND SERVICES WITH ANCILLARY FACILITIES FOR A PERIOD OF 3 YEARS AND ASSOCIATED FILLING OF LAND

SITE LOCATION

VARIOUS LOTS IN D.D. 107, KAM TIN, YUEN LONG, NEW TERRITORIES

SCALE	1 : 800 @ A4
DRAWN BY	MN
DATE	12.8.2024
REVISED BY	
DATE	
APPROVED BY	
DATE	
DWG. TITLE	LAYOUT PLAN
DWG NO.	PLAN 4
VER.	001

STRUCTURE	USE	COVERED AREA	GROSS FLOOR AREA	BUILDING HEIGHT
B1	STORAGE OF TOOLS	$24m^2$ (ABOUT)	$24m^2$ (ABOUT)	3m (ABOUT)(1-STOREY)
B2*	RAIN SHELTER FOR CHILDREN PLAYING AREA	$227m^2$ (ABOUT)	$227m^2$ (ABOUT)	5m (ABOUT)(1-STOREY)
B3*	RAIN SHELTER FOR BARBECUE	$193m^2$ (ABOUT)	$193m^2$ (ABOUT)	5m (ABOUT)(1-STOREY)
B4*	RAIN SHELTER FOR BARBECUE	$221m^2$ (ABOUT)	$221m^2$ (ABOUT)	5m (ABOUT)(1-STOREY)
B5	SHOP AND SERVICES	COVERED BY B4	COVERED BY B4	3m (ABOUT)(1-STOREY)
B6*	RAIN SHELTER FOR PARKING SPACE	$88m^2$ (ABOUT)	$88m^2$ (ABOUT)	4m (ABOUT)(1-STOREY)
B7*	RAIN SHELTER	$93m^2$ (ABOUT)	$93m^2$ (ABOUT)	5m (ABOUT)(1-STOREY)
B8	STORAGE OF TOOLS, RECEPTION	COVERED BY B7	COVERED BY B7	5m (ABOUT)(1-STOREY)
B9*	RAIN SHELTER FOR PRAWNING	$219m^2$ (ABOUT)	$219m^2$ (ABOUT)	5m (ABOUT)(1-STOREY)
B10*	RAIN SHELTER FOR PRAWNING	$219m^2$ (ABOUT)	$219m^2$ (ABOUT)	5m (ABOUT)(1-STOREY)
B11*	RAIN SHELTER FOR BARBECUE	$221m^2$ (ABOUT)	$221m^2$ (ABOUT)	5m (ABOUT)(1-STOREY)
B12*	RAIN SHELTER FOR BARBECUE	$221m^2$ (ABOUT)	$221m^2$ (ABOUT)	5m (ABOUT)(1-STOREY)
B13*	RAIN SHELTER	$62m^2$ (ABOUT)	$62m^2$ (ABOUT)	4m (ABOUT)(1-STOREY)
B14	ACTIVITIES ROOM	$31m^2$ (ABOUT)	$31m^2$ (ABOUT)	3m (ABOUT)(1-STOREY)
B15	ACTIVITIES ROOM	$15m^2$ (ABOUT)	$15m^2$ (ABOUT)	3m (ABOUT)(1-STOREY)
B16*	RAIN SHELTER FOR FISHING	$227m^2$ (ABOUT)	$227m^2$ (ABOUT)	5m (ABOUT)(1-STOREY)
B17	PORTABLE TOILET	$8m^2$ (ABOUT)	$8m^2$ (ABOUT)	2.8m (ABOUT)(1-STOREY)
B18	PORTABLE TOILET	$3m^2$ (ABOUT)	$3m^2$ (ABOUT)	2.8m (ABOUT)(1-STOREY)
B19	PORTABLE TOILET	$8m^2$ (ABOUT)	$8m^2$ (ABOUT)	2.8m (ABOUT)(1-STOREY)
B20	PORTABLE TOILET	$15m^2$ (ABOUT)	$15m^2$ (ABOUT)	3m (ABOUT)(1-STOREY)
B21	RAIN SHELTER	$31m^2$ (ABOUT)	$31m^2$ (ABOUT)	3.5m (ABOUT)(1-STOREY)
B22	STORAGE OF TOOLS	$22m^2$ (ABOUT)	$22m^2$ (ABOUT)	3m (ABOUT)(1-STOREY)
B23	RAIN SHELTER	$60m^2$ (ABOUT)	$60m^2$ (ABOUT)	3m (ABOUT)(1-STOREY)
B24	METER ROOM	COVERED BY B23	COVERED BY B23	3m (ABOUT)(1-STOREY)
	TOTAL	**$2,208\ m^2$ (ABOUT)**	**$2,208\ m^2$ (ABOUT)**	

*4 SIDE OPENED SHELTER

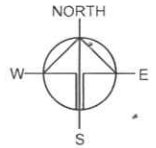

PLANNING CONSULTANT

R-Riches Property Consultants Ltd.

PROJECT

TEMPORARY PLACE OF RECREATION, SPORTS OR CULTURE (HOBBY FARM, FISHING AND PRAWNING GROUND), BARBECUE SITE, HOLIDAY CAMP AND SHOP AND SERVICES WITH ANCILLARY FACILITIES FOR A PERIOD OF 3 YEARS AND ASSOCIATED FILLING OF LAND

SITE LOCATION

VARIOUS LOTS IN D.D. 107, KAM TIN, YUEN LONG, NEW TERRITORIES

SCALE

-

DRAWN BY	DATE
MN	12.8.2024
REVISED BY	DATE
APPROVED BY	DATE

DWG. TITLE

DETAILS OF STRUCTURES

DWG NO.	VER.
PLAN 5	001

PAVED RATIO OF THE APPLICATION SITE

APPLICATION SITE AREA	: 9,375 m^2	(ABOUT)
COVERED BY STRUCTURE	: 2,208 m^2	(ABOUT)
LAND FILLING AREA	: 4,042 m^2	(ABOUT)
DEPTH OF LAND FILLING	: NOT MORE THAN 0.2m	(ABOUT)
MATERIAL OF LAND FILLING	: CONCRETE	
PURPOSE OF LAND FILLING	: SITE FORMATION OF STRUCTURES, CHILDREN PLAYING AREA, AND CIRCULATION SPACE	
AREA COVERED BY GRAVEL	: 1,630 m^2	(ABOUT)
USE	: VEHICLE PARKING AND L/UL AREA	
SOILED GROUND AREA	: 1,021 m^2	(ABOUT)
USE	: OPEN SPACE, PARKING, L/UL SPACES	
LAWN AREA	: 1,921 m^2	(ABOUT)
USE	: TENT CAMPING AREA AND OPEN SPACE	
HOBBY FARM AREA	: 661 m^2	(ABOUT)
USE	: HOBBY FARM	
ARTIFICIAL POND AREA	: 100 m^2	(ABOUT)
USE	: FISHING AND PRAWN-FISHING	

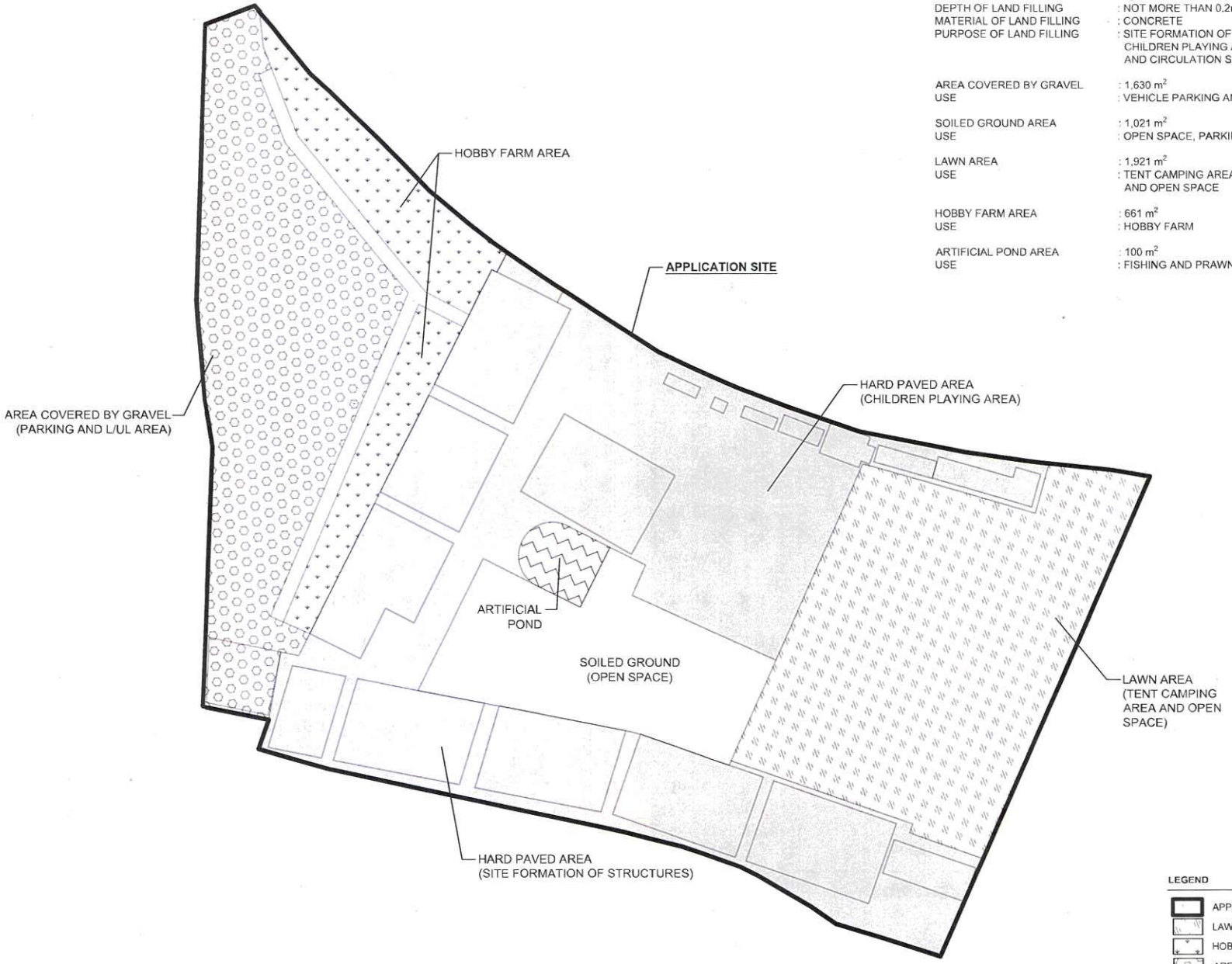

LEGEND

- APPLICATION SITE
- LAWN AREA
- HOBBY FARM AREA
- AREA COVERED BY GRAVEL
- SOILED GROUND AREA
- HARD PAVED AREA

SITE BOUNDARY FOR IDENTIFICATION PURPOSE ONLY.

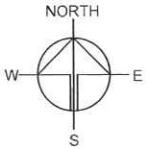

PLANNING CONSULTANT

R-Riches Property Consultants Ltd.

PROJECT

TEMPORARY PLACE OF RECREATION, SPORTS OR CULTURE (HOBBY FARM, FISHING AND PRAWNING GROUND), BARBECUE SITE, HOLIDAY CAMP AND SHOP AND SERVICES WITH ANCILLARY FACILITIES FOR A PERIOD OF 3 YEARS AND ASSOCIATED FILLING OF LAND

SITE LOCATION

VARIOUS LOTS IN D.D. 107, KAM TIN, YUEN LONG, NEW TERRITORIES

SCALE	1 : 800 @ A4
DRAWN BY: MN	DATE: 12.8.2024
CHECKED BY	DATE
APPROVED BY	DATE
DWG. TITLE	PAVED RATIO PLAN
DWG NO. PLAN 6	VER. 001

SWEPT PATH ANALYSIS

TYPE OF VEHICLE : LIGHT GOODS VEHICLE
DIMENSION OF VEHICLE : 2.1m (W) X 5.2m (L)

SWEPT PATHS GENERATED BY AUTODESK VEHICLE TRACKING.

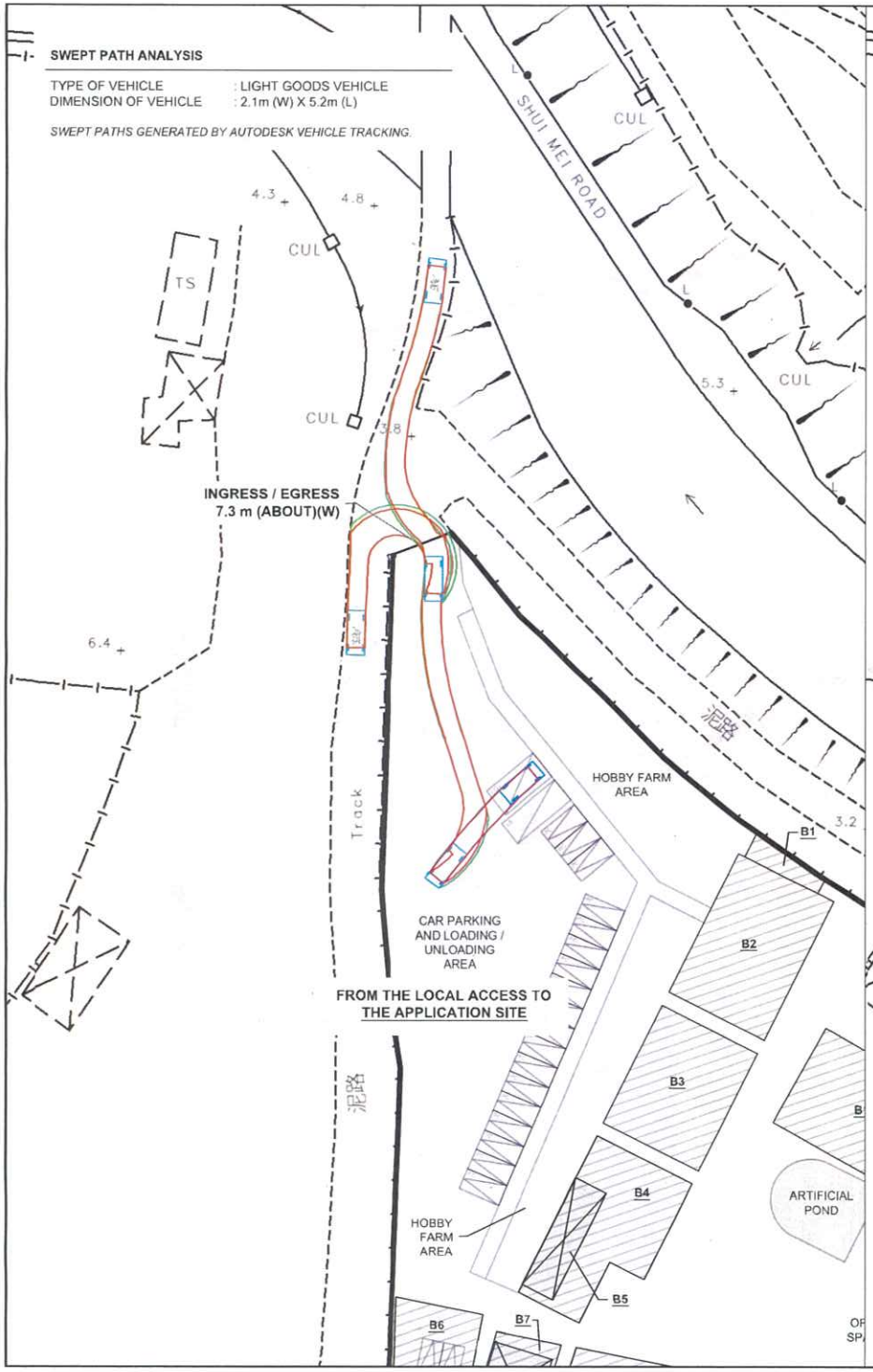

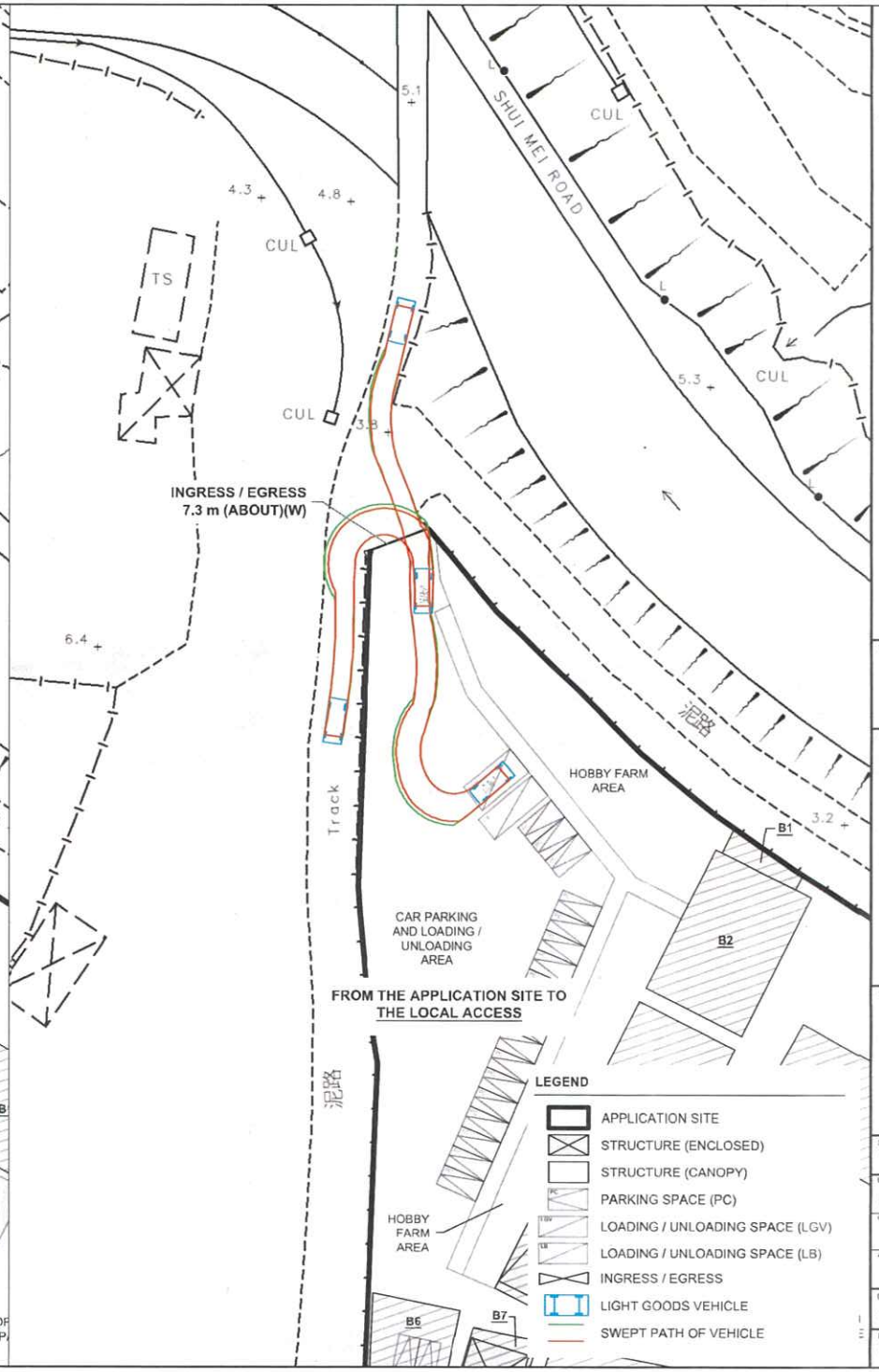

NORTH
W E
S

PLANNING CONSULTANT

R-Riches Property Consultants Ltd.

PROJECT

TEMPORARY PLACE OF RECREATION, SPORTS OR CULTURE (HOBBY FARM, FISHING AND PRAWNING GROUND), BARBECUE SITE, HOLIDAY CAMP AND SHOP AND SERVICES WITH ANCILLARY FACILITIES FOR A PERIOD OF 3 YEARS AND ASSOCIATED FILLING OF LAND

SITE LOCATION

VARIOUS LOTS IN D.D. 107, KAM TIN, YUEN LONG, NEW TERRITORIES

SCALE	1 : 800 @ A4
DRAWN BY	MN
DATE	12.8.2024
CHECKED BY	
DATE	
APPROVED BY	
DATE	
DWG. TITLE	SWEPT PATH ANALYSIS
DWG NO	PLAN 7
VER.	001

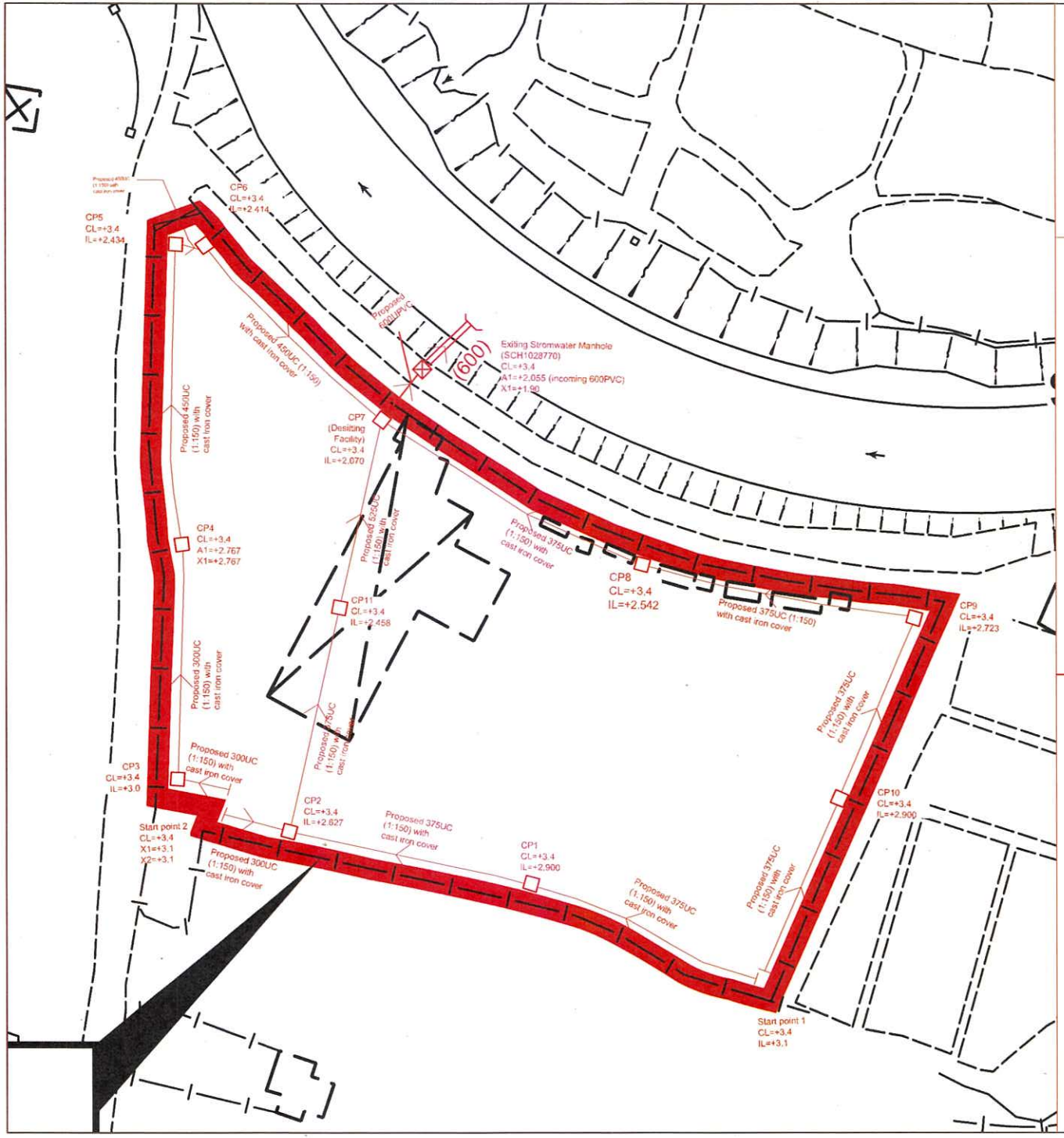

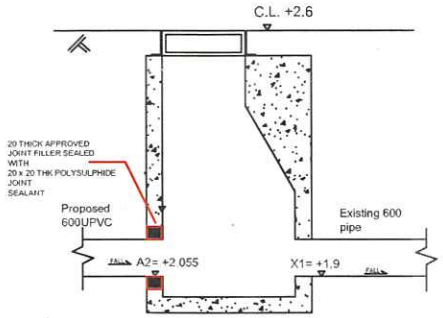

Connection Details of Existing Stormwater Manhole SCH1028769
(For Typical Existing Stormwater Manhole)

Note:

1. Catchpit (CP7) with desilting facility shall follow CEDD standard drawing No. C2406I.

2. Catchpit and UC follows Typical Details of Geotechnical Manual for Slope Fig.8.10 and Fig.8.11 respectively.

3. All UCs are covered by cast iron

4. The inverted level of the connection point shall be verified on site prior the commencement of work

Legend:

- Proposed 300UC/375UC 450UC/525UC(1:150) with cast iron cover
- Proposed Catchpit
- Existing Stormwater Manhole

Company:

恒協工程有限公司
Handship Engineering Company Limited

Project:

Temporary Place of Recreation, Sports or Culture (Hobby Farm, Fish and Prawning Ground), Barbecue Site, Holiday Camp and Shop and Services with Ancillary Facilities for a Period of 3 Years and Associated Filling of Land

Title:

Drainage Proposal-Layout

Dwg No: Fig.1

File: DD107 Lot1750

Date: 22-2-2024

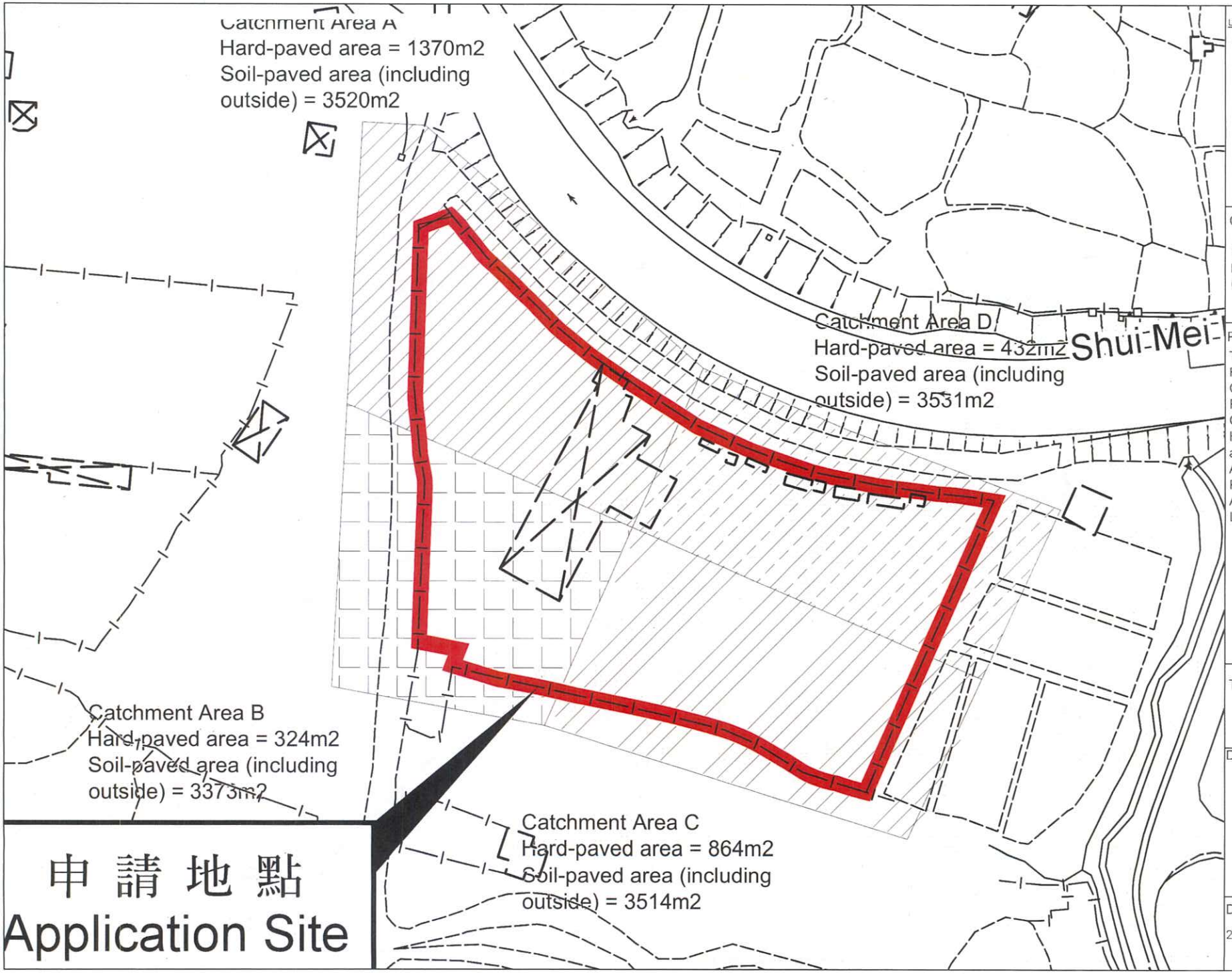

Legend.

Proposed 300UC/375UC 450UC/525UC(1:150) with cast iron cover

Proposed Catchpit

Existing Stormwater Manhole

Company:

恒協工程有限公司
Handship Engineering Company Limited

Project:

Temporary Place of Recreation, Sports or Culture (Hobby Farm, Fish and Prawning Ground), Barbecue Site, Holiday Camp and Shop and Services with Ancillary Facilities for a Period of 3 Years and Associated Filling of Land

Title:

Catchment Area

Dwg No: Fig.2

File: DD107 Lot1750

Date: 22-2-2024

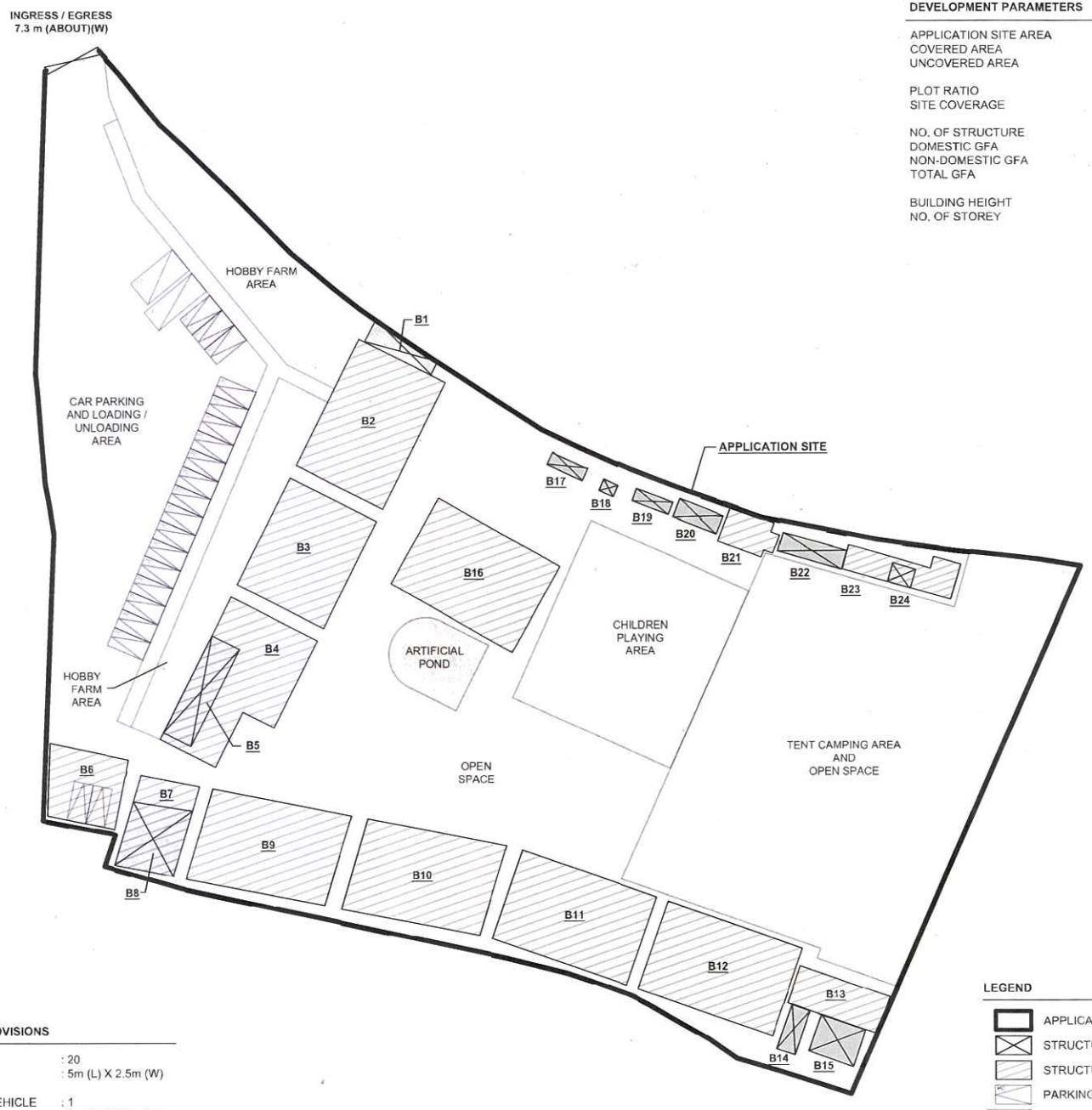

DEVELOPMENT PARAMETERS

APPLICATION SITE AREA	: 9,375 m^2	(ABOUT)
COVERED AREA	: 2,208 m^2	(ABOUT)
UNCOVERED AREA	: 7,167 m^2	(ABOUT)
PLOT RATIO	: 0.24	(ABOUT)
SITE COVERAGE	: 24 %	(ABOUT)
NO. OF STRUCTURE	: 24	
DOMESTIC GFA	: NOT APPLICABLE	
NON-DOMESTIC GFA	: 2,208 m^2	(ABOUT)
TOTAL GFA	: 2,208 m^2	(ABOUT)
BUILDING HEIGHT	: 2.8m - 5m	(ABOUT)
NO. OF STOREY	: 1	

PARKING AND LOADING/UNLOADING PROVISIONS

NO. OF PRIVATE CAR PARKING SPACE	: 20
DIMENSION OF PARKING SPACE	: 5m (L) X 2.5m (W)
NO. OF L/UL SPACE FOR LIGHT GOODS VEHICLE	: 1
DIMENSION OF L/UL SPACE	: 7m (L) X 3.5m (W)
NO. OF L/UL SPACE FOR LIGHT BUS	: 1
DIMENSION OF L/UL SPACE	: 8m (L) X 3m (W)

LEGEND

- APPLICATION SITE
- STRUCTURE (ENCLOSED)
- STRUCTURE (CANOPY)
- PC — PARKING SPACE (PC)
- LGV — LOADING / UNLOADING SPACE (LGV)
- LB — LOADING / UNLOADING SPACE (LB)
- INGRESS / EGRESS

NORTH
W E
S

PLANNING CONSULTANT

R-Riches Property Consultants Ltd.

PROJECT

TEMPORARY PLACE OF RECREATION, SPORTS OR CULTURE (HOBBY FARM, FISHING AND PRAWNING GROUND), BARBECUE SITE, HOLIDAY CAMP AND SHOP AND SERVICES WITH ANCILLARY FACILITIES FOR A PERIOD OF 3 YEARS AND ASSOCIATED FILLING OF LAND

SITE LOCATION

VARIOUS LOTS IN D.D. 107, KAM TIN, YUEN LONG, NEW TERRITORIES

SCALE: 1 : 800 @ A4	
DRAWN BY: MN	DATE: 12.8.2024
REVISED BY:	DATE:
APPROVED BY:	DATE:
DWG. TITLE: LAYOUT PLAN	
DWG NO.: PLAN 4	VER: 001

Company: Handship Engineering Company Limited
Project: Proposed drainage at Lots 1750A4 RP (Par t), 1750A5 RP and 1750A6 RP (Part) in D.D. 107, Fung Kat Heung, Kam Tin, Yuen Long
Date: 2020/7/10

Calculation for Design of Channels:

i = 250 mm/hr

Catchment Area :						c		i		Peak runoff			
	m^2	km^2								liter/min	liter/min	m^3/s	m^3/s
A(Hard-paved)	1370	0.00137				0.95		250		5427.3	9096.9	0.090	0.152
A(Soil-paved)	3520	0.00352				0.25		250		3669.6		0.061	
B(Hard-paved)	324	0.000324				0.95		250		1283.5	4799.9	0.021	0.080
B(Soil-paved)	3373	0.003373	X	0.278	X	0.25	X	250	=	3516.4		0.059	
C(Hard-paved)	864	0.000864				0.95		250		3422.7	7086.1	0.057	0.118
C(Soil-paved)	3514	0.003514				0.25		250		3663.3		0.061	
D(Hard-paved)	432	0.000432				0.95		250		1711.4	5392.4	0.029	0.090
D(Soil-paved)	3531	0.003531				0.25		250		3681.1		0.061	
									Total =	26375.3		0.4396	

According to (Figure 8.7 - Chart for the Rapid Design of Channels),
For gradient 1:150, 375UC or above will be suitable for A
For gradient 1:150, 300UC or above will be suitable for B
For gradient 1:150, 375UC or above will be suitable for C
For gradient 1:150, 300UC or above will be suitable for D

Total Peak runoff for B and C = 11886.0 liter/min
For gradient 1:150, 375UC or above will be suitable for B and C

Total Peak runoff for C and D = 12478.5 liter/min
For gradient 1:150, 375UC or above will be suitable for B and C

Total Peak runoff for A and B = 13896.7 liter/min
For gradient 1:150, 450UC or above will be suitable for A and B

Total Peak runoff for the whole site = 26375.3 liter/min
For gradient 1:150, 525UC or above will be suitable for B and C

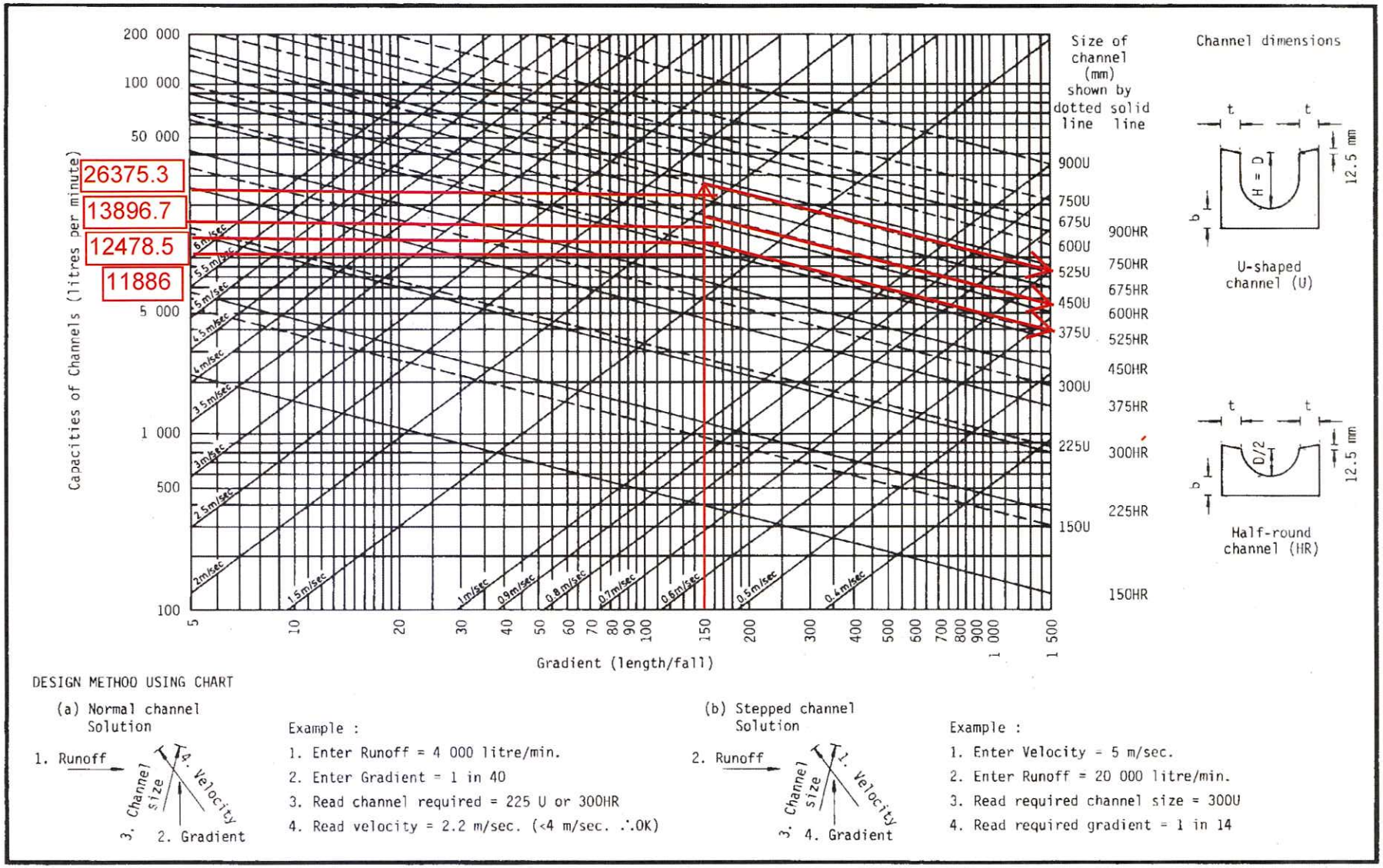

DESIGN METHOD USING CHART

(a) Normal channel Solution

1. Runoff → 3. Channel size → 4. Velocity → 2. Gradient

Example :

1. Enter Runoff = 4 000 litre/min.
2. Enter Gradient = 1 in 40
3. Read channel required = 225 U or 300HR
4. Read velocity = 2.2 m/sec. (<4 m/sec. ∴OK)

(b) Stepped channel Solution

2. Runoff → 3. Channel size → 1. Velocity → 4. Gradient

Example :

1. Enter Velocity = 5 m/sec.
2. Enter Runoff = 20 000 litre/min.
3. Read required channel size = 300U
4. Read required gradient = 1 in 14

Figure 8.7 - Chart for the Rapid Design of Channels

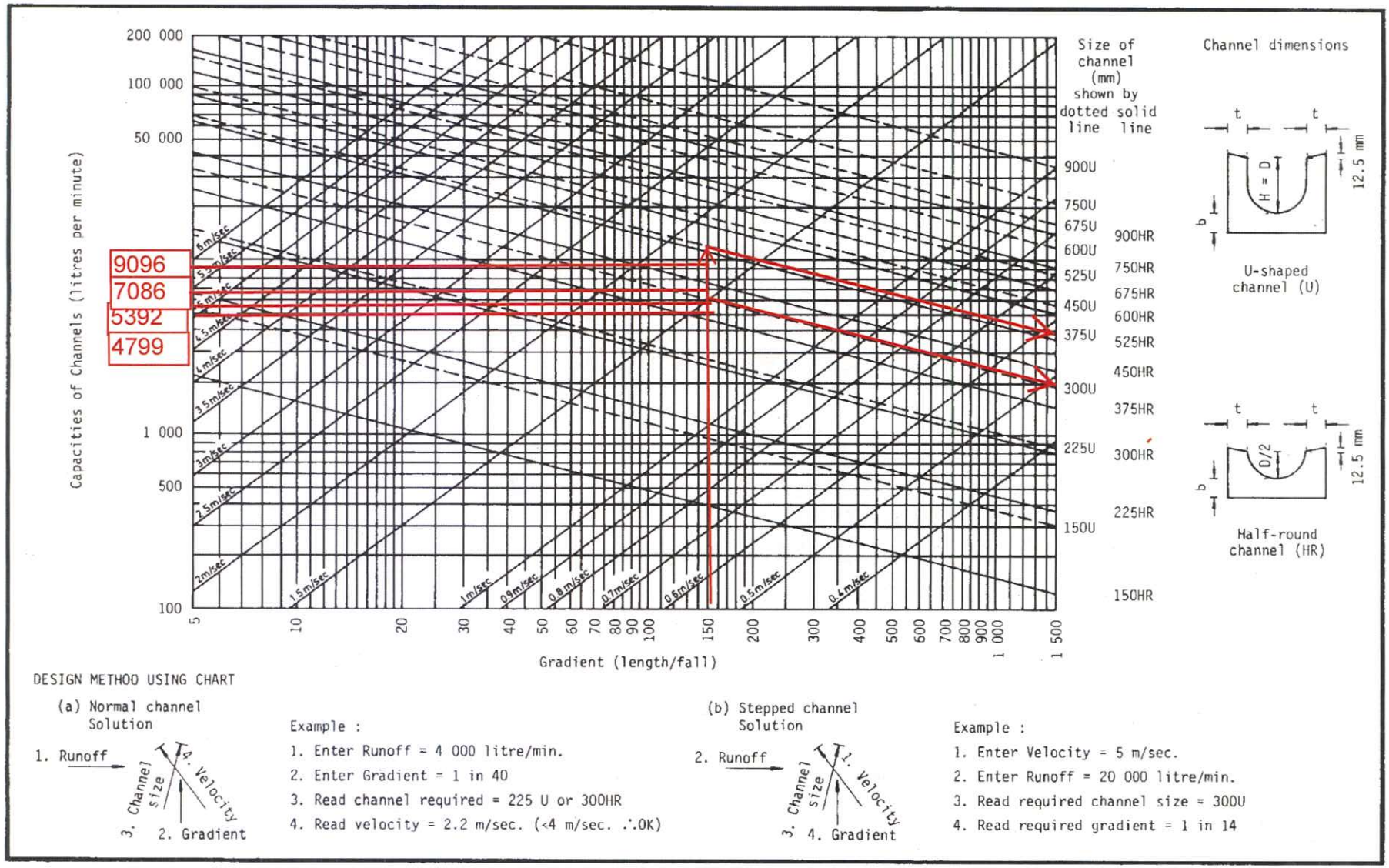

DESIGN METHOD USING CHART

(a) Normal channel Solution

1. Runoff
2. Gradient
3. Channel size
4. Velocity

Example :

1. Enter Runoff = 4 000 litre/min.
2. Enter Gradient = 1 in 40
3. Read channel required = 225 U or 300HR
4. Read velocity = 2.2 m/sec. (<4 m/sec. ∴OK)

(b) Stepped channel Solution

1. Velocity
2. Runoff
3. Channel size
4. Gradient

Example :

1. Enter Velocity = 5 m/sec.
2. Enter Runoff = 20 000 litre/min.
3. Read required channel size = 300U
4. Read required gradient = 1 in 14

Figure 8.7 - Chart for the Rapid Design of Channels

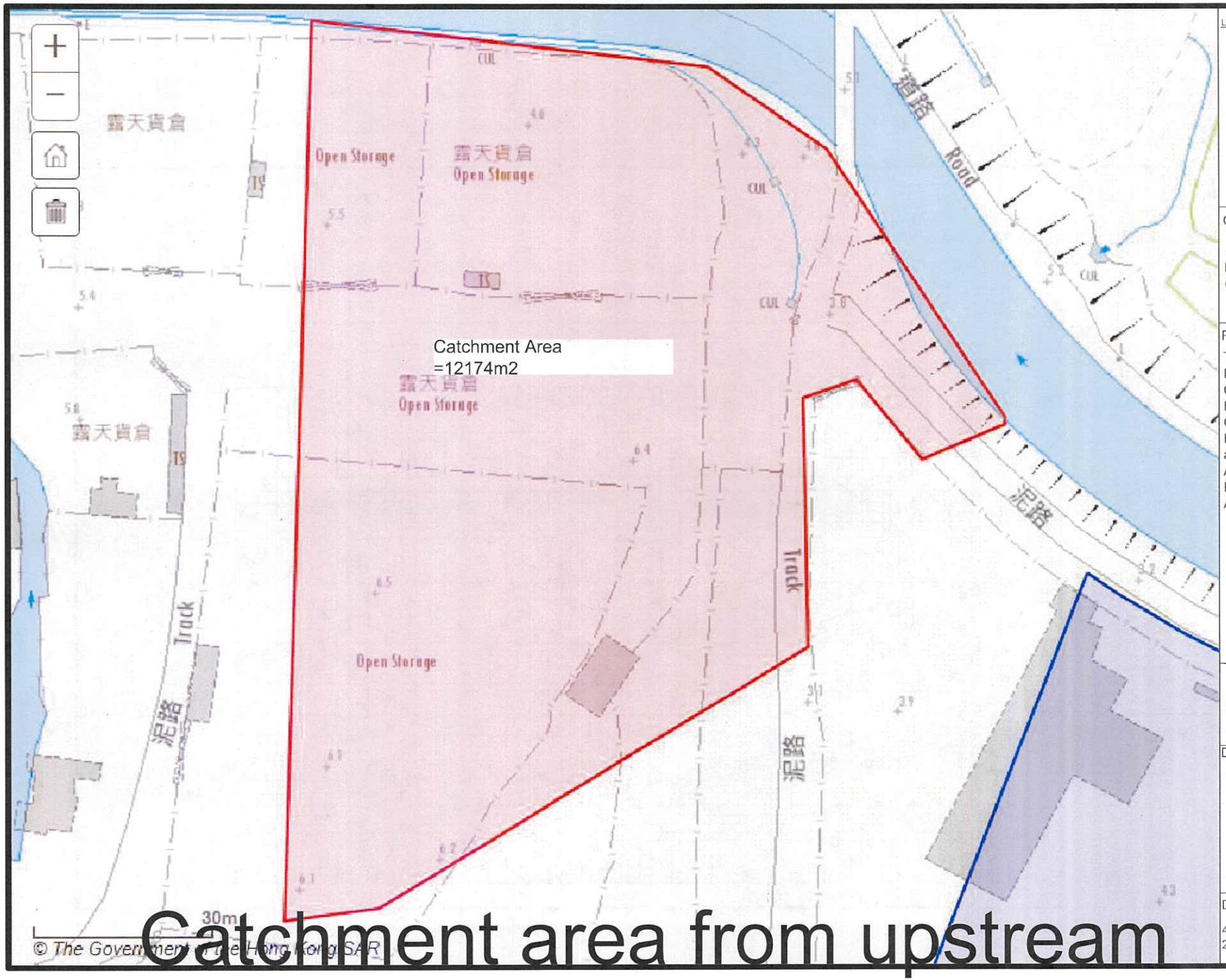

Legend:

- Proposed 300UC/375UC 450UC(1:150) with cast iron cover
- Existing UPVC
- Proposed Catchpit
- Existing Stormwater Manhole

Company:

恆協工程有限公司
Handship Engineering Company Limited

Project:

Temporary Place of Recreation, Sports or Culture (Hobby Farm, Fish and Prawning Ground), Barbecue Site, Holiday Camp and Shop and Services with Ancillary Facilities for a Period of 3 Years and Associated Filling of Land

Title:

Catchment Area (Con't)

Dwg No:	File:
Fig.3b	DD107 Lot1750
Date: 4th Dec 2020	

Catchment area from upstream

Company:	Handship Engineering Company Limited
Project:	Proposed drainage at Lots 1750A4 RP (Par t), 1750A5 RP and 1750A6 RP (Part) in D.D. 107, Fung Kat Heung, Kam Tin, Yuen Long
Date:	2020/12/4

CHECK EXISTING 600mm dia pipes (SWD1065691)

Upstream flow from 375UC and 600UC

Upstream, Catchment Area	=	12174	m^2
	=	0.012174	km^2

Peak runoff in m^3/s	=	0.278	x	0.25	x	250	mm/hr	x	0.012174	km^2
	=	0.211523	m^3/s							
	=	12691	liter/min							

For gradient 1:100, existing 375UC has adequate capacity for stormwater collection system

Total Peak runoff to SWD1065691	=	0.7	m^3/s	=	39067	liter/min

(Site catchment and upstream area)

Check existing 600mm dia. Pipes (SWD1065691) by Colebrook-White Equation

$$V = -\sqrt{(8gDs)}\log\left(\frac{ks}{3.7D} + \frac{2.51v}{D\sqrt{(2gDs)}}\right)$$

where :

V	=			mean velocity (m/s)	
g	=	9.81	m/s2	gravitational acceleration (m/s2)	
D	=	0.6	m	internal pipe diameter (m)	
ks	=	0.00015	m	hydraulic pipeline roughness (m)	(Table 5, from DSD Sewerage Manual, concrete pipe)
v	=	1.14E-06	m2/s	kinematic viscosity of fluid (m2/s)	
s	=	0.01		hydraulic gradient	
Pip area	=	0.282743	m2		
10% reduction of flow area	=	0.254469	m2		

Therefore, design V of pipe capacity	=	2.8059	m/s	>	Design velocity	=	0.6511	m3/s	/	0.254469
						=	2.302833	m/s		===>O.K.

Exsiting 600mm dia. Pipe have spare capacity to accommodate the flow from the application site

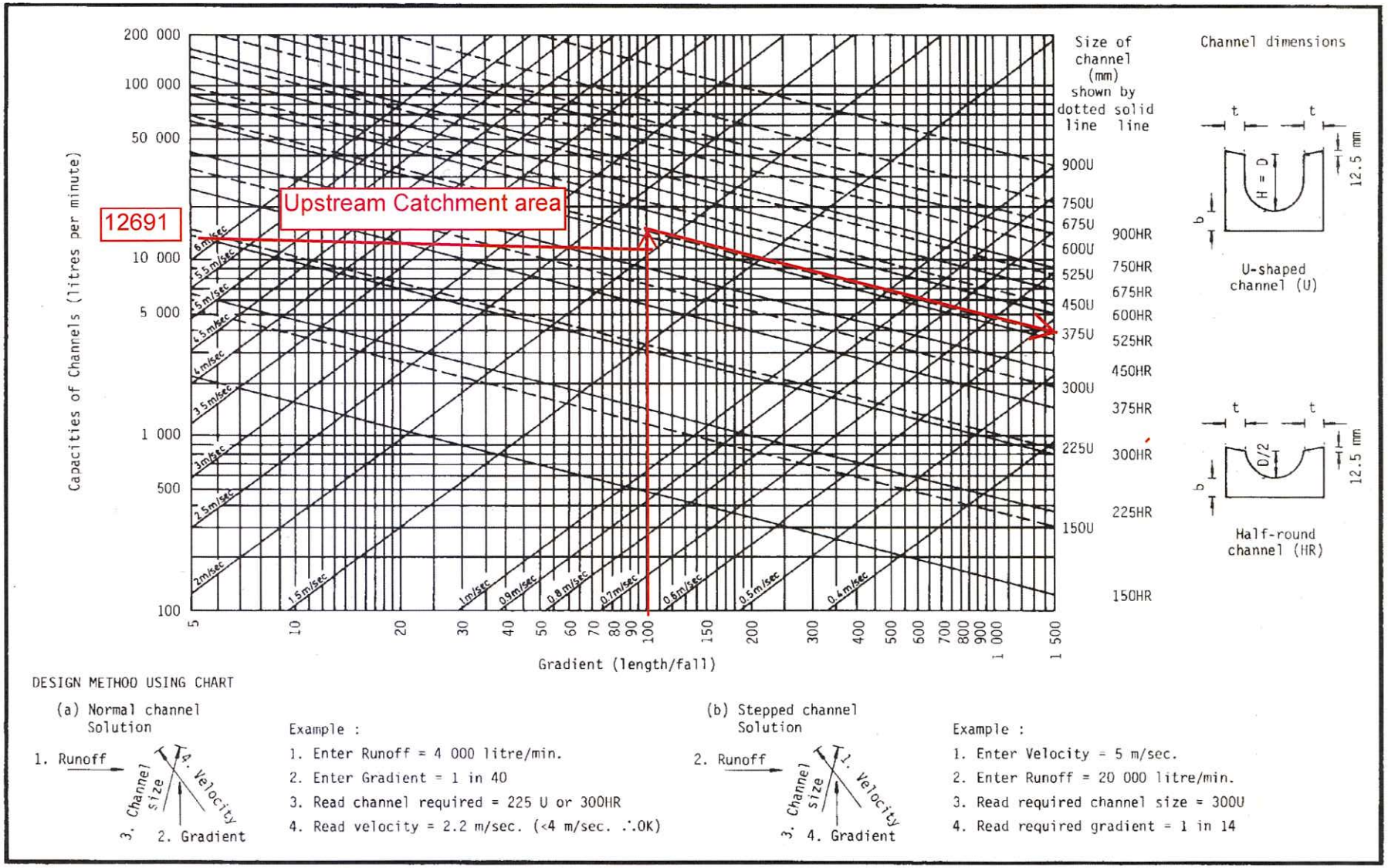

DESIGN METHOD USING CHART

(a) Normal channel Solution

1. Runoff
2. Gradient
3. Channel size
4. Velocity

Example :

1. Enter Runoff = 4 000 litre/min.
2. Enter Gradient = 1 in 40
3. Read channel required = 225 U or 300HR
4. Read velocity = 2.2 m/sec. (<4 m/sec. ∴OK)

(b) Stepped channel Solution

2. Runoff
1. Velocity
3. Channel size
4. Gradient

Example :

1. Enter Velocity = 5 m/sec.
2. Enter Runoff = 20 000 litre/min.
3. Read required channel size = 300U
4. Read required gradient = 1 in 14

Figure 8.7 - Chart for the Rapid Design of Channels

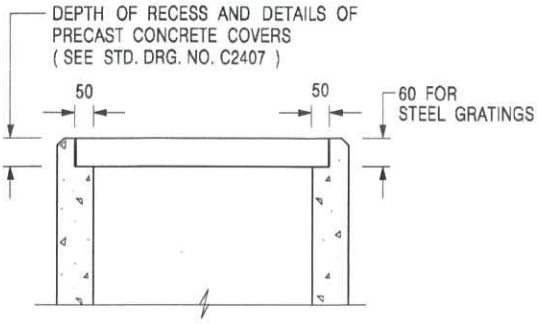

ALTERNATIVE TOP SECTION FOR PRECAST CONCRETE COVERS / GRATINGS

NOTES:

1. ALL DIMENSIONS ARE IN MILLIMETRES.
2. ALL CONCRETE SHALL BE GRADE 20 /20.
3. CONCRETE SURFACE FINISH SHALL BE CLASS U2 OR F2 AS APPROPRIATE.
4. FOR DETAILS OF JOINT, REFER TO STD. DRG. NO. C2413.
5. CONCRETE TO BE COLOURED AS SPECIFIED.
6. UNLESS REQUESTED BY THE MAINTENANCE PARTY AND AS DIRECTED BY THE ENGINEER, CATCHPIT WITH TRAP IS NORMALLY NOT PREFERRED DUE TO PONDING PROBLEM.
7. UPON THE REQUEST FROM MAINTENANCE PARTY, DRAIN PIPES AT CATCHPIT BASE CAN BE USED BUT THIS IS FOR CATCHPITS LOCATED AT SLOPE TOE ONLY AND AS DIRECTED BY THE ENGINEER.
8. FOR CATCHPITS CONSTRUCTED ON OR ADJACENT TO A FOOTPATH, STEEL GRATINGS (SEE DETAIL 'A' ON STD. DRG. NO. C2405) OR CONCRETE COVERS (SEE STD. DRG. NO. C2407) SHALL BE PROVIDED AS DIRECTED BY THE ENGINEER.
9. IF INSTRUCTED BY THE ENGINEER, HANDRAILING (SEE DETAIL 'G' ON STD. DRG. NO. C2405; EXCEPT ON THE UPSLOPE SIDE) IN LIEU OF STEEL GRATINGS OR CONCRETE COVERS CAN BE ACCEPTED AS AN ALTERNATIVE SAFETY MEASURE FOR CATCHPITS NOT ON A FOOTPATH NOR ADJACENT TO IT. TOP OF THE HANDRAILING SHALL BE 1 000 mm MIN. MEASURED FROM THE ADJACENT GROUND LEVEL.
10. MINIMUM INTERNAL CATCHPIT WIDTH SHALL BE 1 000 mm FOR CATCHPITS WITH A HEIGHT EXCEEDING 1 000 mm MEASURED FROM THE INVERT LEVEL TO THE ADJACENT GROUND LEVEL. AND, STEP IRONS (SEE DSD STD. DRG. NO. DS1043) AT 300 c/c STAGGERED SHALL BE PROVIDED. THICKNESS OF CATCHPIT WALL FOR INSTALLATION OF STEP IRONS SHALL BE INCREASED TO 150 mm.
11. FOR RETROFITTING AN EXISTING CATCHPIT WITH STEEL GRATING, SEE DETAIL 'F' ON STD. DRG. NO. C2405.
12. SUBJECT TO THE APPROVAL OF THE ENGINEER, OTHER MATERIALS CAN ALSO BE USED AS COVERS / GRATINGS.

REF.	REVISION	SIGNATURE	DATE
–	FORMER DRG. NO. C2406J.	Original Signed	03.2015

CATCHPIT WITH TRAP

(SHEET 2 OF 2)

CEDD CIVIL ENGINEERING AND DEVELOPMENT DEPARTMENT

SCALE 1 : 20

DATE JAN 1991

DRAWING NO. C2406 /2

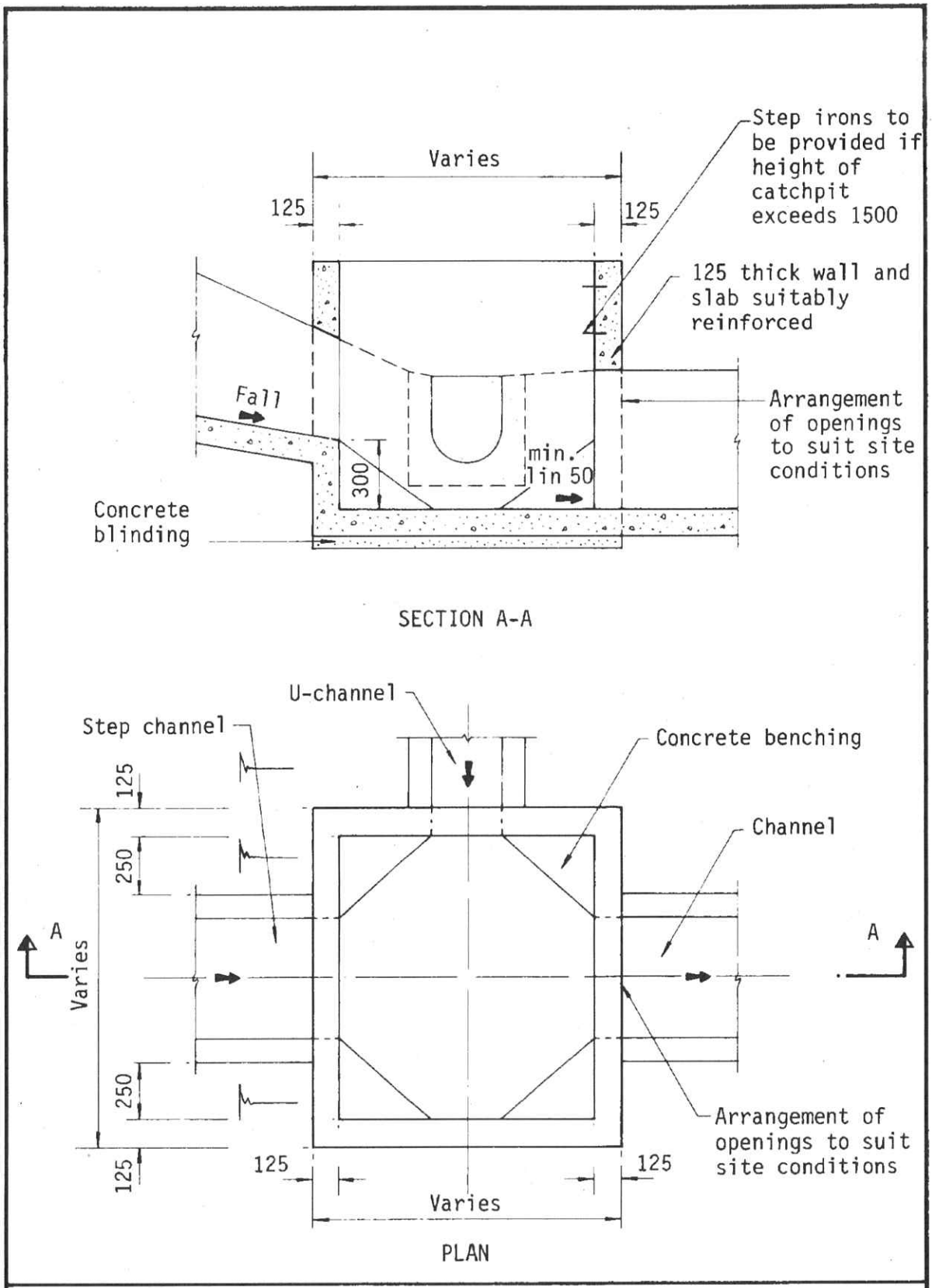

Note : All dimensions in millimetres

Figure 8.10 - Typical Details of Catchpits

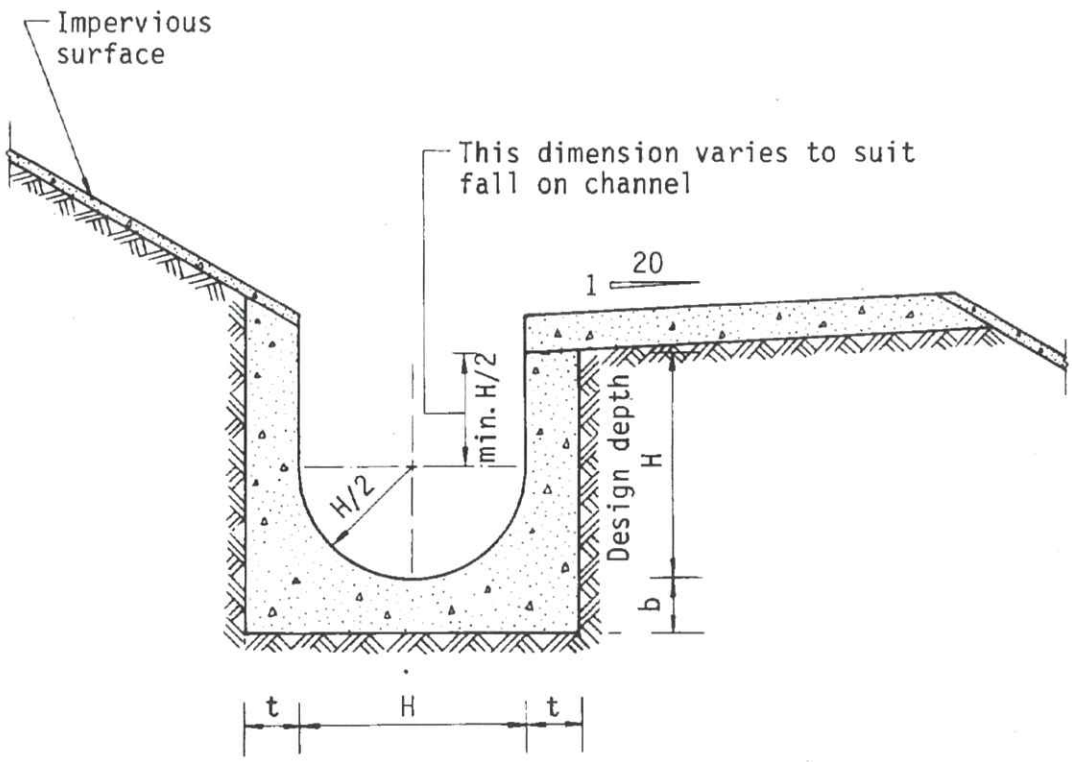

Dimensions of U - channel

Nominal size of channel H (mm)	Thickness t (mm)	Thickness b (mm)
225 to 600	150	150
675 to 1200	175	225

Figure 8.11 - Typical U-channel Details

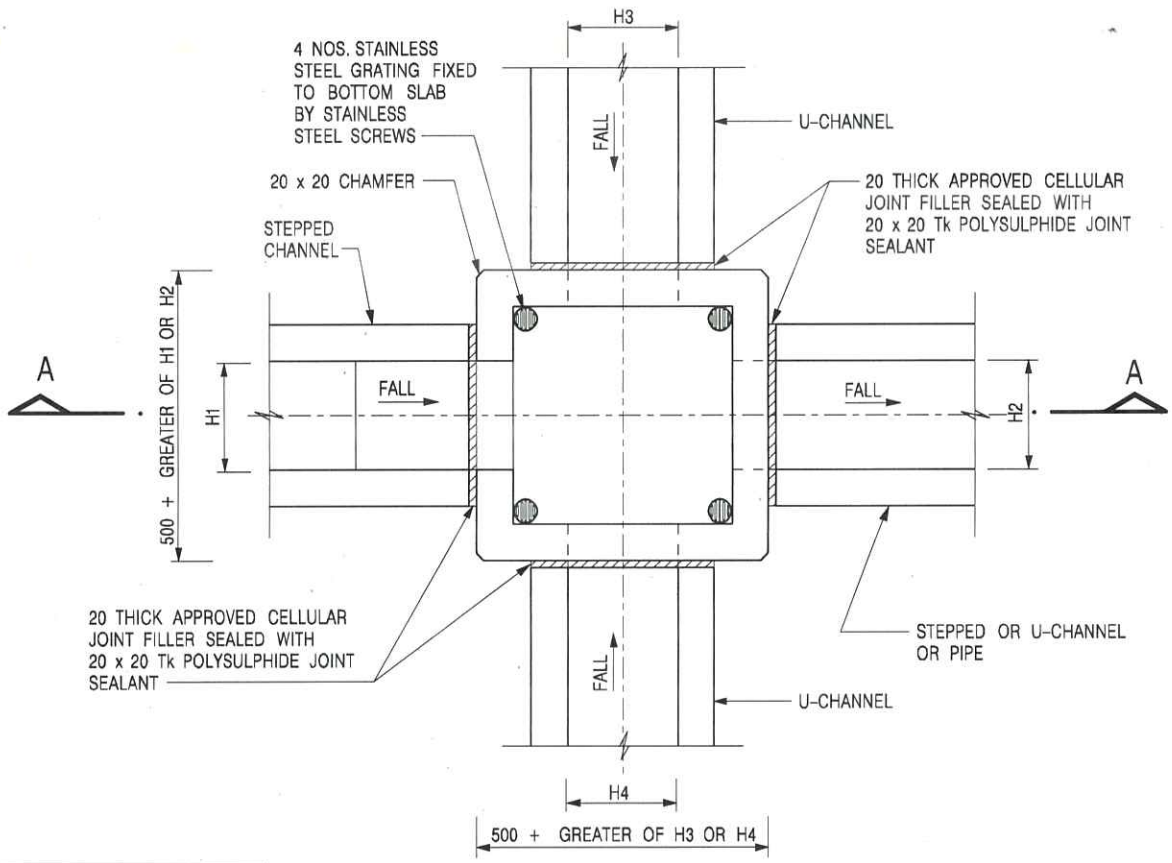

PLAN

NOMINAL SIZE (LARGEST OF H1, H2, H3 & H4)	B
300 – 600	150
675 – 900	175

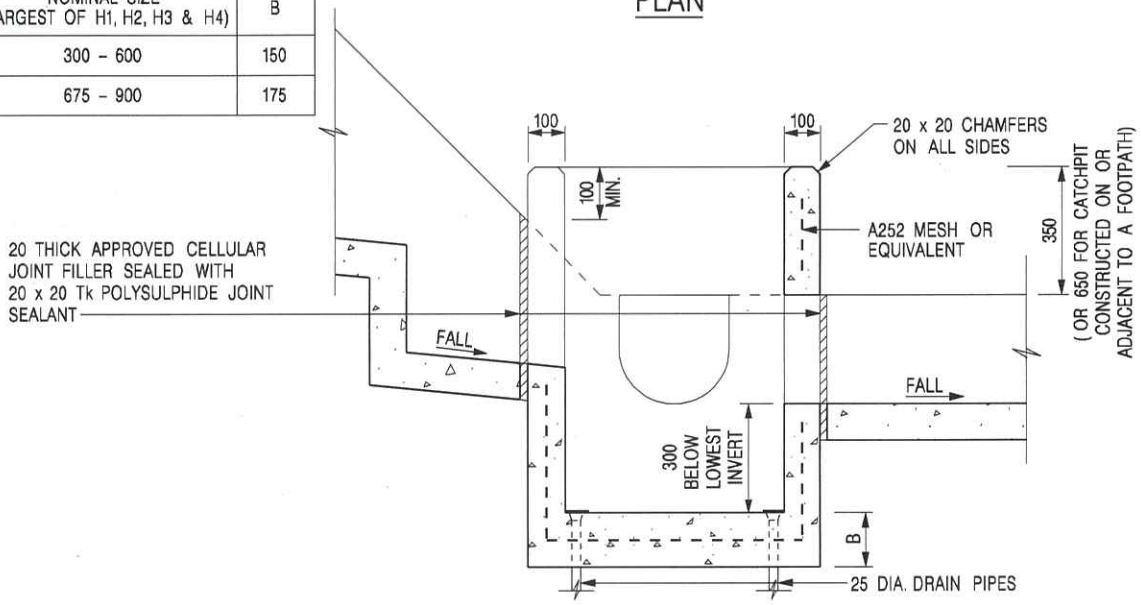

SECTION A – A

NOTES:

1. ALL DIMENSIONS ARE IN MILLIMETRES.
2. REFER TO SHEET 2 FOR OTHER NOTES.

REF.	REVISION	SIGNATURE	DATE
–	FORMER DRG. NO. C2406J.	Original Signed	03.2015

CATCHPIT WITH TRAP

(SHEET 1 OF 2)

CEDD CIVIL ENGINEERING AND DEVELOPMENT DEPARTMENT

SCALE 1 : 20

DATE JAN 1991

DRAWING NO. C2406 /1

卓越工程 建設香港

We Engineer Hong Kong's Development

FIRE SERVICES NOTES:

1. HOSE REEL SYSTEM

1.1 HOSE REEL SHALL BE PROVIDED AT POSITIONS AS INDICATED ON PLANS.
1.2 THERE SHALL BE SUFFICIENT HOSE REELS TO ENSURE THAT EVERY PART OF THE BUILDING CAN BE REACHED BY A LENGTH OF NOT MORE THAN 30M OF HOSE REEL TUBING. ONE ACTUATING POINT AND ONE AUDIO WARNING DEVICE TO BE LOCATED AT EACH HR POINT. THE ACTUATING POINT SHOULD INCLUDE FACILITIES FOR THE FIRE PUMP START DEVICE INITIATION.
1.3 A MODIFIED HOSE REEL SYSTEM OF 2,000 LITRES WATER TANK TO BE PROVIDED FOR THE ENTIRE BUILDING AS INDICATED ON PLAN.
1.4 NO FIRE SERVICES INLET TO BE PROVIDED FOR THE MODIFIED HOSE REEL SYSTEM.
1.5 WATER SUPPLY FOR THE MODIFIED HOSE REEL SYSTEM TO BE SINGLE END FEED FROM THE GOVERNMENT TOWN MAIN.
1.6 TWO FIXED FIRE PUMPS (DUTY/STANDBY) TO BE PROVIDED AT F.S. & PUMP ROOM.
1.7 THE HR SYSTEM INSTALLED SHOULD BE IN ACCORDANCE WITH PARA. 5.14 OF THE CODE OF PRACTICE FOR MINIMUM FIRE SERVICE INSTALLATION AND EQUIPMENT 2022.
1.8 AN INSTRUCTION PLATE SHALL BE PROVIDED NEXT TO THE BREAK GLASS UNIT FOR OPERATION OF HOSE REEL.

2. FIRE ALARM SYSTEM

2.1 FIRE ALARM SYSTEM SHALL BE PROVIDED THROUGHOUT THE ENTIRE BUILDING IN ACCORDANCE WITH BS 5839-1: 2017 AND FSD CIRCULAR LETTER N0.6/2021. ONE ACTUATING POINT AND ONE AUDIO WARNING DEVICE SHOULD BE LOCATED AT EACH HOSE REEL POINT. THE ACTUATION POINT SHOULD INCLUDE FACILITIES FOR FIRE PUMP START AND AUDIO / VISUAL WARNING DEVICE INITIATION.
2.2 AN ADDRESSABLE TYPE FIRE ALARM PANEL TO BE PROVIDED AND LOCATED INSIDE G/F F.S. PUMP ROOM.

3. MISCELLANEOUS F.S. INSTALLATION

3.1 PORTABLE FIRE EXTINGUISHER WITH SPECIFIED TYPE AND CAPACITY TO BE PROVIDED AT LOCATIONS AS INDICATED ON PLANS.
3.2 SUFFICIENT EMERGENCY LIGHTING SHALL BE PROVIDED THROUGHOUT THE ENTIRE BUILDINGS/STRUCTURES IN ACCORDANCE WITH BS 5266-1:2016, BS EN 1838:2013 AND FSD CL 4/2021.
3.3 SUFFICIENT DIRECTIONAL AND EXIT SIGN SHALL BE PROVIDED IN ACCORDANCE WITH BS 5266: PART 1 AND FSD CIRCULAR LETTER 5/2008.
3.4 NO EMERGENCY GENERATOR TO BE PROVIDED FOR SERVING THE EMERGENCY POWER. DUPLICATED POWER SUPPLIES FOR ALL FIRE SERVICES INSTALLATIONS COMPRISING A CABLE CONNECTED FROM ELECTRICITY MAINS DIRECTLY BEFORE THE MAIN SWITCH.
3.5 WHEN A VENTILATION/ AIR CONDITIONING CONTROL SYSTEM TO A BUILDING IS PROVIDED, IT SHALL STOP MECHANICALLY INDUCED AIR MOVEMENT WITHIN A DESIGNATED FIRE COMPARTMENT.
3.6 NO DYNAMIC SMOKE EXTRACTION SYSTEM SHALL BE PROVIDED SINCE FIRE COMPARTMENT NOT EXCEEDING 7000 CUBIC METRES AND THE AGGREGATE AREA OF OPENABLE WINDOWS OF THE RESPECTIVE COMPARTMENT EXCEEDS 6.25% OF THE FLOOR AREA OF THAT COMPARTMENT.

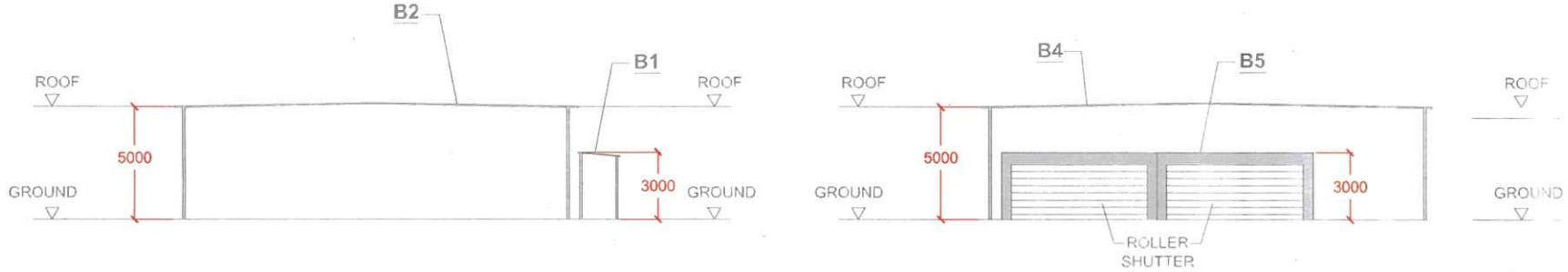

SECTION PLAN OF STRUCTURE B1 - B2 AND B4 - B5

(INDICATIVE ONLY)

NORTH
W E
S

PLANNING CONSULTANT
R-Riches Property Consultants Ltd.

PROJECT
TEMPORARY PLACE OF RECREATION, SPORTS OR CULTURE (HOBBY FARM, FISHING AND PRAWNING GROUND), BARBECUE SITE, HOLIDAY CAMP AND SHOP AND SERVICES WITH ANCILLARY FACILITIES FOR A PERIOD OF 3 YEARS AND ASSOCIATED FILLING OF LAND

SITE LOCATION
VARIOUS LOTS IN D.D. 107, KAM TIN, YUEN LONG, NEW TERRITORIES

SCALE
NOT TO SCALE

DRAWN BY	DATE
MN	12.8.2024
CHECKED BY	DATE
APPROVED BY	DATE

DWG. TITLE
FSIs PROPOSAL (1/2)

DWG. NO.	OF #
APPENDIX II	001

DEVELOPMENT PARAMETERS

APPLICATION SITE AREA	: 9,375 m^2	(ABOUT)
COVERED AREA	: 2,208 m^2	(ABOUT)
UNCOVERED AREA	: 7,167 m^2	(ABOUT)
PLOT RATIO	: 0.24	(ABOUT)
SITE COVERAGE	: 24 %	(ABOUT)
NO. OF STRUCTURE	: 24	
DOMESTIC GFA	: NOT APPLICABLE	
NON-DOMESTIC GFA	: 2,208 m^2	(ABOUT)
TOTAL GFA	: 2,208 m^2	(ABOUT)
BUILDING HEIGHT	: 2.8m - 5m	(ABOUT)
NO. OF STOREY	: 1	

PARKING AND LOADING/UNLOADING PROVISIONS

NO. OF PRIVATE CAR PARKING SPACE	: 20
DIMENSION OF PARKING SPACE	: 5m (L) X 2.5m (W)
NO. OF L/UL SPACE FOR LIGHT GOODS VEHICLE	: 1
DIMENSION OF L/UL SPACE	: 7m (L) X 3.5m (W)
NO. OF L/UL SPACE FOR LIGHT BUS	: 1
DIMENSION OF L/UL SPACE	: 8m (L) X 3m (W)

STRUCTURE	USE	COVERED AREA	GROSS FLOOR AREA	BUILDING HEIGHT
B1	STORAGE OF TOOLS	24m^2 (ABOUT)	24m^2 (ABOUT)	3m (ABOUT)(1-STOREY)
B2*	RAIN SHELTER FOR CHILDREN PLAYING AREA	227m^2 (ABOUT)	227m^2 (ABOUT)	5m (ABOUT)(1-STOREY)
B3*	RAIN SHELTER FOR BARBECUE	193m^2 (ABOUT)	193m^2 (ABOUT)	5m (ABOUT)(1-STOREY)
B4*	RAIN SHELTER FOR BARBECUE	221m^2 (ABOUT)	221m^2 (ABOUT)	5m (ABOUT)(1-STOREY)
B5	SHOP AND SERVICES	COVERED BY B4	COVERED BY B4	3m (ABOUT)(1-STOREY)
B6*	RAIN SHELTER FOR PARKING SPACE	88m^2 (ABOUT)	88m^2 (ABOUT)	4m (ABOUT)(1-STOREY)
B7*	RAIN SHELTER	93m^2 (ABOUT)	93m^2 (ABOUT)	5m (ABOUT)(1-STOREY)
B8	STORAGE OF TOOLS, RECEPTION	COVERED BY B7	COVERED BY B7	5m (ABOUT)(1-STOREY)
B9*	RAIN SHELTER FOR PRAWNING	219m^2 (ABOUT)	219m^2 (ABOUT)	5m (ABOUT)(1-STOREY)
B10*	RAIN SHELTER FOR PRAWNING	219m^2 (ABOUT)	219m^2 (ABOUT)	5m (ABOUT)(1-STOREY)
B11*	RAIN SHELTER FOR BARBECUE	221m^2 (ABOUT)	221m^2 (ABOUT)	5m (ABOUT)(1-STOREY)
B12*	RAIN SHELTER FOR BARBECUE	221m^2 (ABOUT)	221m^2 (ABOUT)	5m (ABOUT)(1-STOREY)
B13*	RAIN SHELTER	62m^2 (ABOUT)	62m^2 (ABOUT)	4m (ABOUT)(1-STOREY)
B14	ACTIVITIES ROOM	31m^2 (ABOUT)	31m^2 (ABOUT)	3m (ABOUT)(1-STOREY)
B15	ACTIVITIES ROOM	15m^2 (ABOUT)	15m^2 (ABOUT)	3m (ABOUT)(1-STOREY)
B16*	RAIN SHELTER FOR FISHING	227m^2 (ABOUT)	227m^2 (ABOUT)	5m (ABOUT)(1-STOREY)
B17	PORTABLE TOILET	8m^2 (ABOUT)	8m^2 (ABOUT)	2.8m (ABOUT)(1-STOREY)
B18	PORTABLE TOILET	3m^2 (ABOUT)	3m^2 (ABOUT)	2.8m (ABOUT)(1-STOREY)
B19	PORTABLE TOILET	8m^2 (ABOUT)	8m^2 (ABOUT)	2.8m (ABOUT)(1-STOREY)
B20	PORTABLE TOILET	15m^2 (ABOUT)	15m^2 (ABOUT)	3m (ABOUT)(1-STOREY)
B21	RAIN SHELTER	31m^2 (ABOUT)	31m^2 (ABOUT)	3.5m (ABOUT)(1-STOREY)
B22	STORAGE OF TOOLS	22m^2 (ABOUT)	22m^2 (ABOUT)	3m (ABOUT)(1-STOREY)
B23	RAIN SHELTER	60m^2 (ABOUT)	60m^2 (ABOUT)	3m (ABOUT)(1-STOREY)
B24	METER ROOM	COVERED BY B23	COVERED BY B23	3m (ABOUT)(1-STOREY)
	TOTAL	2,208 m^2 (ABOUT)	2,208 m^2 (ABOUT)	

*4 SIDE OPENED SHELTER

FIRE SERVICE INSTALLATIONS

- EXIT SIGN
- EMERGENCY LIGHT
- 5 KG CO2 TYPE FIRE EXTINGUISHER
- 4 KG DRY POWER TYPE FIRE EXTINGUISHER

LEGEND

- APPLICATION SITE
- STRUCTURE (ENCLOSED)
- STRUCTURE (CANOPY)
- PARKING SPACE (PC)
- LOADING / UNLOADING SPACE (LGV)
- LOADING / UNLOADING SPACE (LB)
- INGRESS / EGRESS

PLANNING CONSULTANTS: R-Riches Property Consultants Ltd.

PROJECT: TEMPORARY PLACE OF RECREATION, SPORTS OR CULTURE (HOBBY FARM, FISHING AND PRAWNING GROUND), BARBECUE SITE, HOLIDAY CAMP AND SHOP AND SERVICES WITH ANCILLARY FACILITIES FOR A PERIOD OF 3 YEARS AND ASSOCIATED FILLING OF LAND

SITE LOCATION: VARIOUS LOTS IN D.D. 107, KAM TIN, YUEN LONG, NEW TERRITORIES

SCALE: 1 : 500 @ A3	
DRAWN BY: MN	DATE: 12.8.2024
CHECKED BY	DATE
APPROVED BY	DATE
DWG. TITLE: FSIs PROPOSAL (2/2)	
DWG. NO.: APPENDIX II	VER.: 001

寄件者: Louis Tse [redacted]
寄件日期: 2024年10月18日星期五 10:32
收件者: tpbpd/PLAND
副本:

主旨: [Supersede][FI] S.16 Application No. A/YL-KTN/1049 - FI to address departmental comments
附件: FI1 for A_YL-KTN_1049 (20241018).pdf

類別: Internet Email

Dear Sir,

Attached herewith the revised FI to **supersede** the FI submitted on 17/10/2024 (*below email*), to address departmental comments of the subject application.

Should you require more information, please do not hesitate to contact me. Thank you for your kind attention.

Kind Regards,

Louis TSE | Town Planner
R-riches Group (HK) Limited

R-riches Property Consultants Limited | R-riches Planning Limited | R-riches Construction Limited
[redacted]

寄件者: Louis Tse
寄件日期: 2024 年 10 月 17 日 下午 03:48
收件者: Town Planning Board <tpbpd@pland.gov.hk>

主旨: [FI] S.16 Application No. A/YL-KTN/1049 - FI to address departmental comments

Dear Sir,

Attached herewith the further information to address departmental comments of the subject application.

Should you require more information, please do not hesitate to contact me. Thank you for your kind attention.

Kind Regards,

Louis TSE | Town Planner
R-riches Group (HK) Limited

R-riches Property Consultants Limited | R-riches Planning Limited | R-riches Construction Limited

R-Riches
Property Consultants Ltd.

盈卓物業顧問有限公司

Our Ref. : DD107 Lot 1750A4 RP & VL
Your Ref. : TPB/A/YL-KTN/1049

The Secretary,
Town Planning Board,
15/F, North Point Government Offices,
333 Java Road,
North Point, Hong Kong

By Email

18 October 2024

Dear Sir,

1st Further Information

Temporary Place of Recreation, Sports or Culture (Hobby Farm, Fishing and Prawning Ground and Barbecur Site), Shop and Services and Holiday Camp with Ancillary Facilities for a Period of 3 Years and Associated Filling of Land in "Agriculture" Zone, Various Lots in D.D. 107, Kam Tin, Yuen Long, New Territories

(S.16 Planning Application No. A/YL-KTN/1049)

We are writing to submit further information to address departmental comments on the subject application (**Appendix I**).

Should you require more information regarding the application, please contact our Mr. Danny NG at [redacted] or the undersigned at your convenience. Thank you for your kind attention.

Yours faithfully,

For and on behalf of
R-riches Property Consultants Limited

Louis TSE
Town Planner

cc DPO/FSYLE, PlanD (Attn.: Ms. Andrea YAN email: awyyan@pland.gov.hk)
(Attn.: Ms. Olivia NG email: olyng@pland.gov.hk)

Responses-to-Comments

Temporary Place of Recreation, Sports or Culture (Hobby Farm, Fishing and Prawning Ground and Barbecur Site), Shop and Services and Holiday Camp with Ancillary Facilities for a Period of 3 Years and Associated Filling of Land in "Agriculture" Zone, Various Lots in D.D. 107, Kam Tin, Yuen Long, New Territories

(Application No. A/YL-KTN/1049)

(i) A RtoC Table:

Departmental Comments		Applicant's Responses
1. Comments of the Chief Engineer/Mainland North, Drainage Services Department (DSD) (Contact Person: Mr. Terence TANG; Tel.: 2300 1257)		
(a)	A R-to-C table should be provided to address comment below item to item.	It is provided. Please also refer to the revised drainage proposal (**Annex I**).
(b)	GEO Technical Guidance Note No. 43 should be adopted for u-channel checking as Figure 8.7 of the Geotechnical Manual for Slopes (GCO, 1984) was superseded.	GEO Technical Guideline Note No.43 is adopted.
(c)	SDM Corrigendum Nos. 1/2022 and 1/2024 should be considered.	SDM Corrigendum Nos. 1/2022 and 1/2024 are considered.
(d)	Please advise if any site formation/ land filling works to be carried out under this application. Please note that the overland flow from the adjacent lands should not be affected.	0.2m concrete filling is completed on site. It levels the application site (the Site) with surrounding area.
(e)	According to our record, there is existing drains connecting to manhole SCH1028770. Please indicate on drainage plan and update the manhole details.	It is indicated and updated.
(f)	The proposal should indicate how the runoff (the flow direction) within the site would be discharged to the proposed u-channel.	The fall direction is indicated.
(g)	The existing drainage facilities, to which the stormwater of the development from the subject site would discharge, should be	It is indicated and connection details are provided.

	indicated on plan. The relevant connection details should be provided for comment.	
(h)	Please clarify whether any walls or hoarding would be erected along the site boundary. Where walls or hoarding are erected/ laid along the site boundary, adequate opening should be provided to intercept the existing overland flow passing through the site.	Fence wall with bottom opening would be erected on the Site. Typical details of fence wall are provided.
(i)	Cross sections showing the existing and proposed ground levels of the captioned site with respect to the adjacent areas should be given.	Cross sections are provided.
(j)	The development should neither obstruct overland flow nor adversely affect existing natural streams, village drains, ditches and the adjacent areas, etc.	Noted.
(k)	The applicant(s) shall resolve any conflict/disagreement with relevant lot owner(s) and seek LandsD's permission for laying new drains/channels and/or modifying/upgrading existing ones in other private lots or on Government land (where required) outside the application site(s).	Noted.
(l)	It appears that the discharge point is at a DSD's existing u-channel. If the applicant wishes to make any other connection to the public drainage system in the area, please clarify whether the applicant agrees to abide the following: The applicant shall furnish me with their connection proposal for agreement. After obtaining my agreement, the applicant shall submit a duly completed Form HBP1 with a cross cheque covering the technical audit fee and a plan showing the details of the proposed drainage connection works to this Division for the formal application for the	It is agreed by the applicant.

	required connection. Upon my acceptance of the connection application, the applicant shall carry out the proposed connection works in accordance with DSD Standard Drawings at the resources of the applicant. The connection pipe outside the lot boundaries shall be handed over to DSD for maintenance after satisfactory technical audit by DSD.	
2. Comments of the Director of Agriculture, Fisheries and Conservation (DAFC) (Contact Person: Ms. WONG Cheuk-ling; Tel.: 2150 6933)		
(a)	There is a watercourse located to the north of the subject site. The applicant shall clarify whether any measure will be implemented to avoid disturbance to the watercourse nearby during land filling and operation.	2.5m high boundary fencing will be erected along the periphery of the Site to avoid any disturbance caused by the proposed development. The applicant has submitted a drainage proposal to provide drainage facilities within the Site, including the provision of peripheral u-channels and catchpits, to mitigate the potential adverse drainage impact. During the operation of the proposed development, surface run-off will be discharged into storm drains through appropriately designed sand/silt removal facilities such as sand traps, silt traps, and sediment basins. Silt removal facilities, channels, and catchpits will be maintained, and the deposited silt and grit will be removed on a regular basis, at the start and end of each rainstorm, to ensure that these facilities are always operational. Therefore, disturbance to the watercourse nearby should <u>not</u> be anticipated.
3. Comments of the Director of Fire Services (D of FS) (Contact Person: Mr. CHUNG Wing-hei; Tel.: 2733 7737)		
(a)	With regard to the submitted FSI proposal, he has the following comments: (i) The floor area of structures B5 and B8 shall be indicated on plan; and (ii) Legend of all FSIs shall be provided.	Please refer to the revised fire service installations (FSIs) proposal (**Annex II**). The floor area of structure B5 and B8 are indicated. The legends of all FSIs are provided.

4. Comments of the District Lands Officer/Yuen Long, Lands Department (DLO/YL, LandsD) (Contact Person: Ms. S. L. Cheng; Tel.: 2443 1072)		
(a)	There is /are unauthorized structure(s) and uses on Lot Nos. 1750A5 RP and 1750A6 RP in D.D. 107. The lot owner(s) should immediately rectify/apply for regularization on the lease breaches and this office reserves the rights to take necessary lease enforcement action against the breaches without further notice.	The applicant will submit Short Term Wavier (STW) application to rectify the applied use after planning approval has been obtained from the Town Planning Board. No structure is proposed for domestic use.
(b)	If the planning application is approved, the STW holder(s) will need to apply to this office for modification for the STW conditions where appropriate and the lot owner(s) shall apply to this office for an STW to permit the structure(s) erected within Lot Nos. 1750 A5 RP and 1750A6 RP in D.D. 107. The application(s) for STW will be considered by the Government in its capacity as a landlord and there is no guarantee that it will be approved. The STW, if approved, will be subject to such terms and conditions including the payment of waiver fee and administrative fee as considered appropriate by LandsD. Besides, given the proposed use is temporary in nature, only erection of temporary structure(s) will be considered.	
5. Comments of the Commissioner for Transport (C for T) (Contact Person: Mr. Phil CAI; Tel.: 2399 2421)		
(a)	Pre-booking system shall be considered to avoid illegal parking near the site and unexpected overflow traffic.	Visitors are required to make appointments in advance to access the Site, which would help to prevent excessive number of visitors and affect the public, walk in visitors will not be served.
(b)	The applicant should note the local access between Chi Ho Road and the site is not managed by this Department.	Noted.

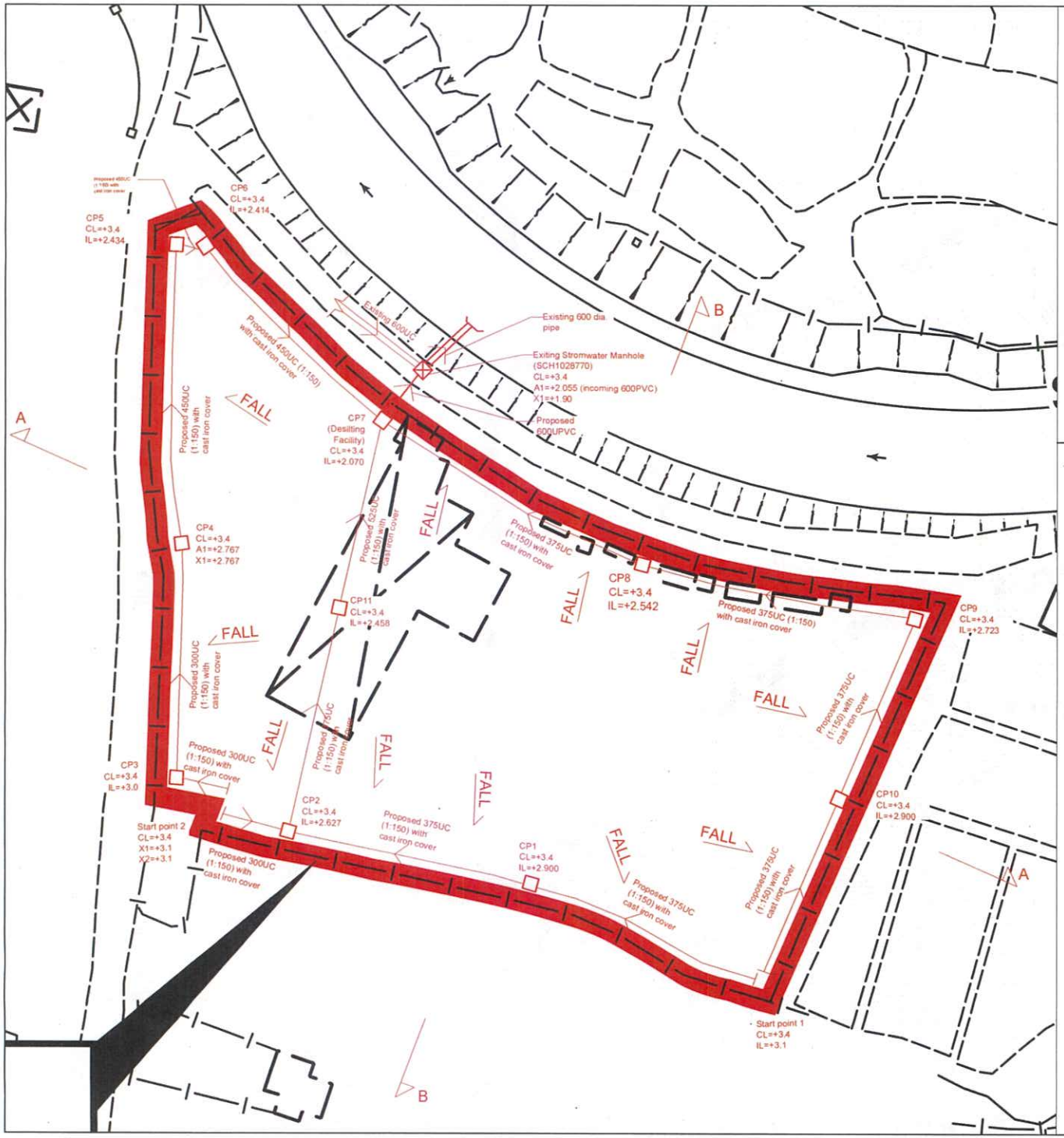

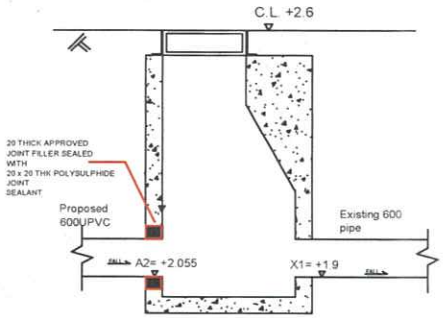

Connection Details of Existing Stormwater Manhole SCH1028769
(For Typical Existing Stormwater Manhole)

Note:

1. Catchpit (CP7) with desilting facility shall follow CEDD standard drawing No. C2406I.

2. Catchpit and UC follows Typical Details of Geotechnical Manual for Slope Fig.8.10 and Fig.8.11 respectively.

3. All UCs are covered by cast iron

4. The inverted level of the connection point shall be verified on site prior the commencement of work

Legend

- Proposed 300UC/375UC 450UC/525UC(1:150) with cast iron cover
- Proposed Catchpit
- Existing Stormwater Manhole

Company:

恒協工程有限公司
Handship Engineering Company Limited

Project:

Proposed Temporary Place of Recreation, Sports or Culture (Hobby Farm) for a Period of 5 Years at Lots 1750A4 RP (Part), 1750A5 RP and 1750A6 RP (Part) in D.D. 107, Fung Kat Heung, Kam Tin, Yuen Long

OZP:
Application No. A/YL-KTN/1049

Zoning:
Agriculture

Title:

Drainage Proposal-Layout

Dwg No:

Fig.1

File:

DD107
Lot1750

Date:

17-10-2024

Annex I

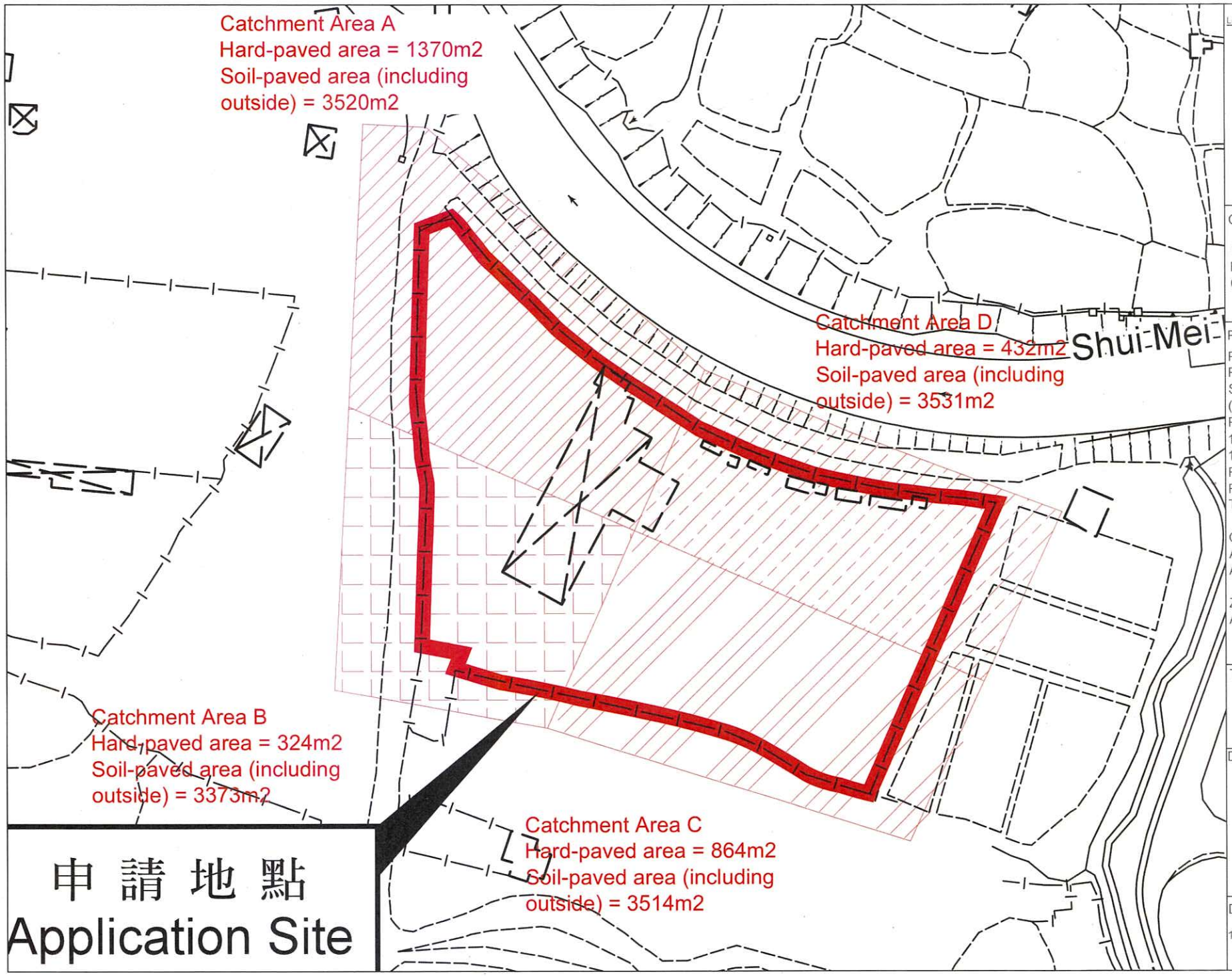

Legend:

- Proposed 300UC/375UC 450UC/525UC(1:150) with cast iron cover
- Proposed Catchpit
- Existing Stormwater Manhole

Company:

恆協工程有限公司
Handship Engineering Company Limited

Project:

Proposed Temporary Place of Recreation, Sports or Culture (Hobby Farm) for a Period of 5 Years at Lots 1750A4 RP (Part), 1750A5 RP and 1750A6 RP (Part) in D.D. 107, Fung Kat Heung, Kam Tin, Yuen Long

OZP:
Application No. A/YL-KTN/1049

Zoning:
Agriculture

Title:

Catchment Area

Dwg No:	File:
Fig.2	DD107 Lot1750
Date: 17-10-2024	

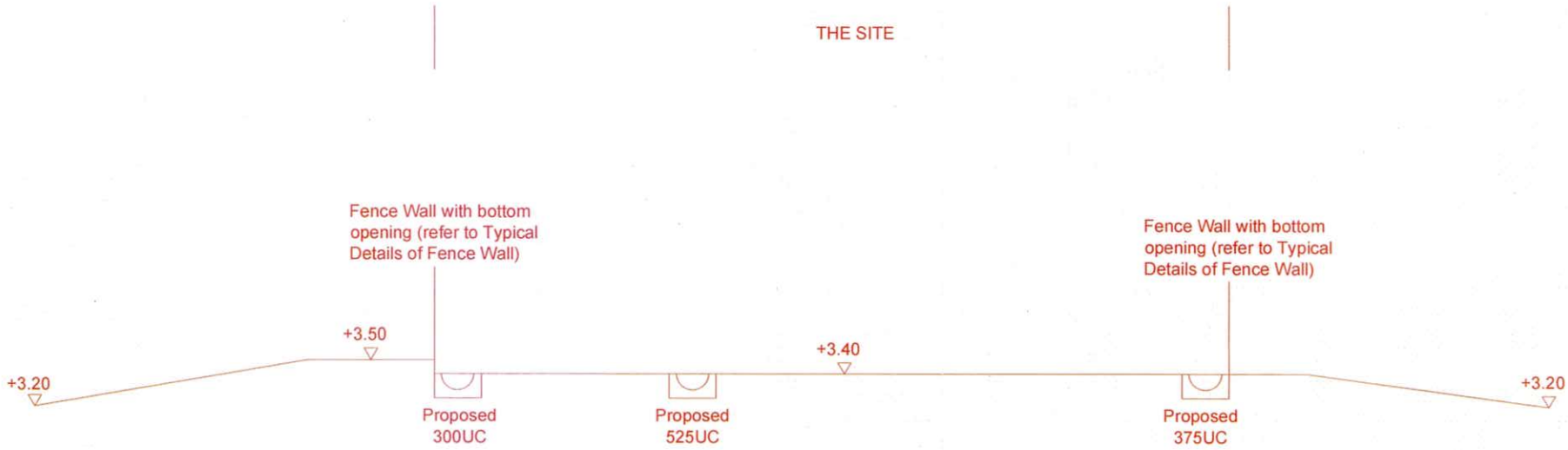

SECTION A-A

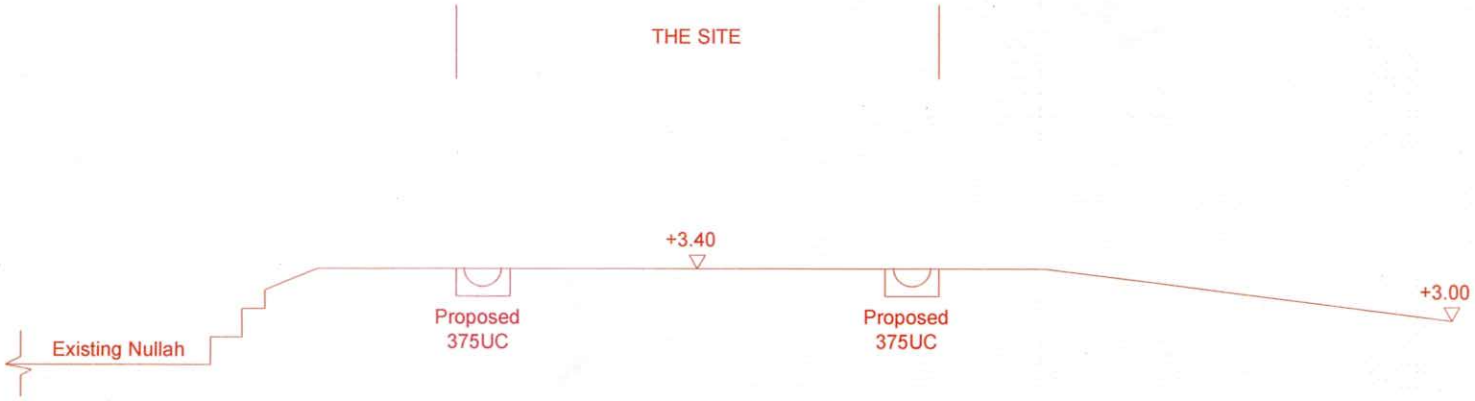

SECTION B-B

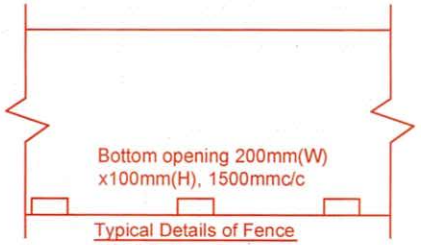

Typical Details of Fence Wall Bottom Opening

Legend:

- Proposed 300UC/375UC 450UC/525UC(1:150) with cast iron cover
- Proposed Catchpit
- Existing Stormwater Manhole

Company:

恆協工程有限公司
Handship Engineering Company Limited

Project:

Proposed Temporary Place of Recreation, Sports or Culture (Hobby Farm) for a Period of 5 Years at Lots 1750A4 RP (Part), 1750A5 RP and 1750A6 RP (Part) in D.D. 107, Fung Kat Heung, Kam Tin, Yuen Long

OZP:
Application No. A/YL-KTN/1049

Zoning:
Agriculture

Title:

Section

Dwg No:

Fig.3

File:

DD107
Lot1750

Date:

17-10-2024

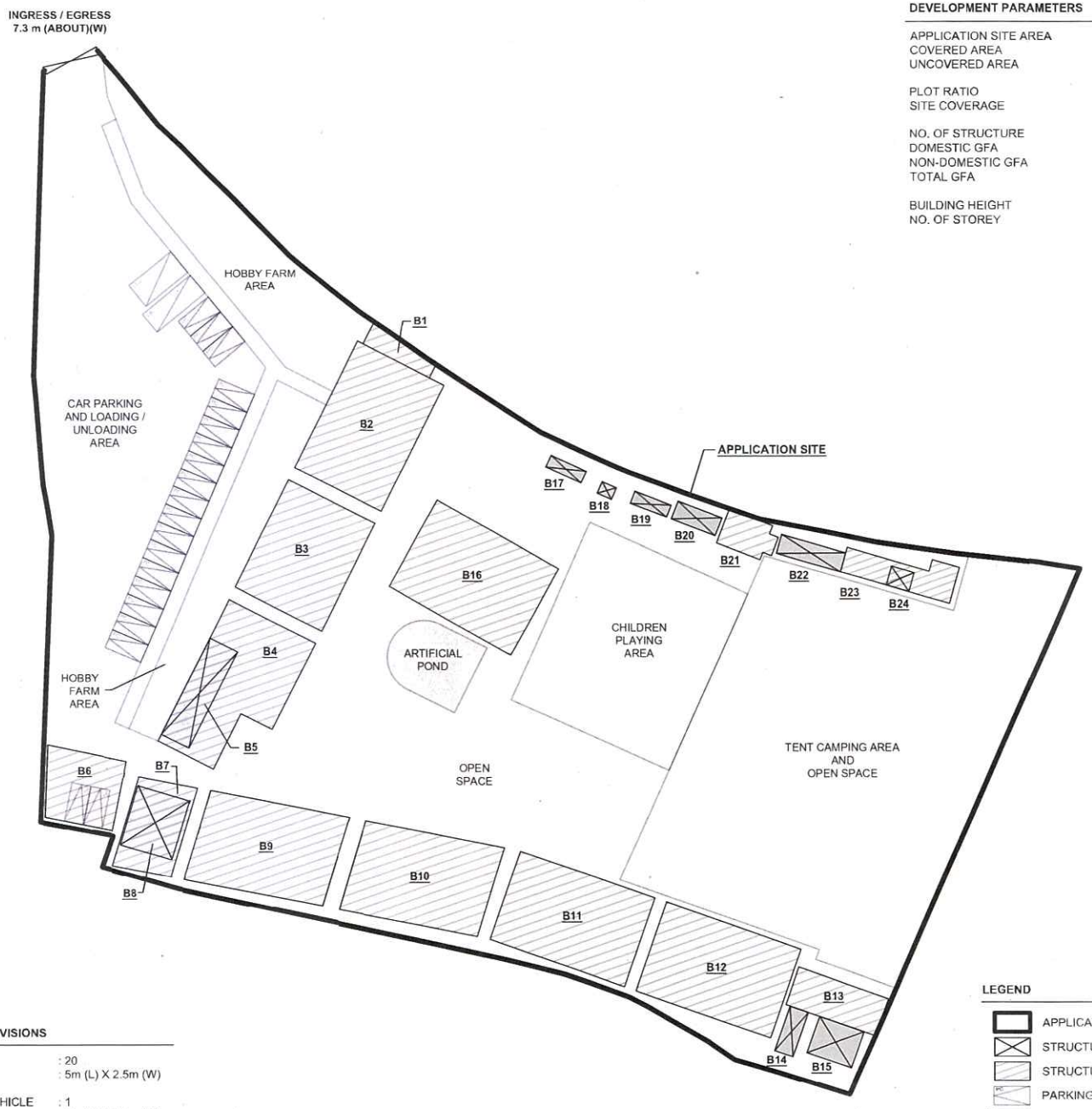

DEVELOPMENT PARAMETERS

APPLICATION SITE AREA	: 9,375 m^2	(ABOUT)
COVERED AREA	: 2,208 m^2	(ABOUT)
UNCOVERED AREA	: 7,167 m^2	(ABOUT)
PLOT RATIO	: 0.24	(ABOUT)
SITE COVERAGE	: 24 %	(ABOUT)
NO. OF STRUCTURE	: 24	
DOMESTIC GFA	: NOT APPLICABLE	
NON-DOMESTIC GFA	: 2,208 m^2	(ABOUT)
TOTAL GFA	: 2,208 m^2	(ABOUT)
BUILDING HEIGHT	: 2.8m - 5m	(ABOUT)
NO. OF STOREY	: 1	

PARKING AND LOADING/UNLOADING PROVISIONS

NO. OF PRIVATE CAR PARKING SPACE	: 20
DIMENSION OF PARKING SPACE	: 5m (L) X 2.5m (W)
NO. OF L/UL SPACE FOR LIGHT GOODS VEHICLE	: 1
DIMENSION OF L/UL SPACE	: 7m (L) X 3.5m (W)
NO. OF L/UL SPACE FOR LIGHT BUS	: 1
DIMENSION OF L/UL SPACE	: 8m (L) X 3m (W)

LEGEND

- APPLICATION SITE
- STRUCTURE (ENCLOSED)
- STRUCTURE (CANOPY)
- PARKING SPACE (PC)
- LOADING / UNLOADING SPACE (LGV)
- LOADING / UNLOADING SPACE (LB)
- INGRESS / EGRESS

NORTH
W E
S

PLANNING CONSULTANT

R-Riches Property Consultants Ltd.

PROJECT

TEMPORARY PLACE OF RECREATION, SPORTS OR CULTURE (HOBBY FARM, FISHING AND PRAWNING GROUND), BARBECUE SITE, HOLIDAY CAMP AND SHOP AND SERVICES WITH ANCILLARY FACILITIES FOR A PERIOD OF 3 YEARS AND ASSOCIATED FILLING OF LAND

SITE LOCATION

VARIOUS LOTS IN D.D. 107, KAM TIN, YUEN LONG, NEW TERRITORIES

SCALE	1 : 800 @ A4
DRAWN BY: MN	DATE: 12.8.2024
REVISED BY	DATE
APPROVED BY	DATE
DWG. TITLE	LAYOUT PLAN
DWG NO. PLAN 4	VER. 001

STRUCTURE	USE	COVERED AREA	GROSS FLOOR AREA	BUILDING HEIGHT
B1	STORAGE OF TOOLS	24m^2 (ABOUT)	24m^2 (ABOUT)	3m (ABOUT)(1-STOREY)
B2*	RAIN SHELTER FOR CHILDREN PLAYING AREA	227m^2 (ABOUT)	227m^2 (ABOUT)	5m (ABOUT)(1-STOREY)
B3*	RAIN SHELTER FOR BARBECUE	193m^2 (ABOUT)	193m^2 (ABOUT)	5m (ABOUT)(1-STOREY)
B4*	RAIN SHELTER FOR BARBECUE	221m^2 (ABOUT)	221m^2 (ABOUT)	5m (ABOUT)(1-STOREY)
B5	SHOP AND SERVICES	COVERED BY B4	COVERED BY B4	3m (ABOUT)(1-STOREY)
B6*	RAIN SHELTER FOR PARKING SPACE	88m^2 (ABOUT)	88m^2 (ABOUT)	4m (ABOUT)(1-STOREY)
B7*	RAIN SHELTER	93m^2 (ABOUT)	93m^2 (ABOUT)	5m (ABOUT)(1-STOREY)
B8	STORAGE OF TOOLS, RECEPTION	COVERED BY B7	COVERED BY B7	5m (ABOUT)(1-STOREY)
B9*	RAIN SHELTER FOR PRAWNING	219m^2 (ABOUT)	219m^2 (ABOUT)	5m (ABOUT)(1-STOREY)
B10*	RAIN SHELTER FOR PRAWNING	219m^2 (ABOUT)	219m^2 (ABOUT)	5m (ABOUT)(1-STOREY)
B11*	RAIN SHELTER FOR BARBECUE	221m^2 (ABOUT)	221m^2 (ABOUT)	5m (ABOUT)(1-STOREY)
B12*	RAIN SHELTER FOR BARBECUE	221m^2 (ABOUT)	221m^2 (ABOUT)	5m (ABOUT)(1-STOREY)
B13*	RAIN SHELTER	62m^2 (ABOUT)	62m^2 (ABOUT)	4m (ABOUT)(1-STOREY)
B14	ACTIVITIES ROOM	31m^2 (ABOUT)	31m^2 (ABOUT)	3m (ABOUT)(1-STOREY)
B15	ACTIVITIES ROOM	15m^2 (ABOUT)	15m^2 (ABOUT)	3m (ABOUT)(1-STOREY)
B16*	RAIN SHELTER FOR FISHING	227m^2 (ABOUT)	227m^2 (ABOUT)	5m (ABOUT)(1-STOREY)
B17	PORTABLE TOILET	8m^2 (ABOUT)	8m^2 (ABOUT)	2.8m (ABOUT)(1-STOREY)
B18	PORTABLE TOILET	3m^2 (ABOUT)	3m^2 (ABOUT)	2.8m (ABOUT)(1-STOREY)
B19	PORTABLE TOILET	8m^2 (ABOUT)	8m^2 (ABOUT)	2.8m (ABOUT)(1-STOREY)
B20	PORTABLE TOILET	15m^2 (ABOUT)	15m^2 (ABOUT)	3m (ABOUT)(1-STOREY)
B21	RAIN SHELTER	31m^2 (ABOUT)	31m^2 (ABOUT)	3.5m (ABOUT)(1-STOREY)
B22	STORAGE OF TOOLS	22m^2 (ABOUT)	22m^2 (ABOUT)	3m (ABOUT)(1-STOREY)
B23	RAIN SHELTER	60m^2 (ABOUT)	60m^2 (ABOUT)	3m (ABOUT)(1-STOREY)
B24	METER ROOM	COVERED BY B23	COVERED BY B23	3m (ABOUT)(1-STOREY)
	TOTAL	**2,208 m^2 (ABOUT)**	**2,208 m^2 (ABOUT)**	

*4 SIDE OPENED SHELTER

PLANNING CONSULTANT

R-Riches Property Consultants Ltd.

PROJECT

TEMPORARY PLACE OF RECREATION, SPORTS OR CULTURE (HOBBY FARM, FISHING AND PRAWNING GROUND), BARBECUE SITE, HOLIDAY CAMP AND SHOP AND SERVICES WITH ANCILLARY FACILITIES FOR A PERIOD OF 3 YEARS AND ASSOCIATED FILLING OF LAND

SITE LOCATION

VARIOUS LOTS IN D.D. 107, KAM TIN, YUEN LONG, NEW TERRITORIES

SCALE

-

DRAWN BY	DATE
MN	12.8.2024
REVISED BY	DATE
APPROVED BY	DATE

DWG. TITLE

DETAILS OF STRUCTURES

DWG NO.	VER.
PLAN 5	001

Company: Handship Engineering Company Limited
Project: Proposed drainage at Lots 1750A4 RP (Par t), 1750A5 RP and 1750A6 RP (Part) in D.D. 107, Fung Kat Heung, Kam Tin, Yuen Long
Date: 17/10/2024

Calculation for Design of Channels:

Catchment Area :						c		i		Peak runoff			
	m^2	km^2								liter/min	liter/min	m^3/s	m^3/s
A(Hard-paved)	1370	0.00137				0.95		226.8		4924	8253	0.0821	0.138
A(Soil-paved)	3520	0.00352				0.25		226.8		3329		0.0555	
B(Hard-paved)	324	0.000324				0.95		226.8		1165	4355	0.0194	0.073
B(Soil-paved)	3373	0.003373	X	0.278	X	0.25	X	226.8	=	3190		0.0532	
C(Hard-paved)	864	0.000864				0.95		226.8		3105	6429	0.0518	0.107
C(Soil-paved)	3514	0.003514				0.25		226.8		3324		0.0554	
D(Hard-paved)	432	0.000432				0.95		226.8		1553	4892	0.0259	0.082
D(Soil-paved)	3531	0.003531				0.25		226.8		3340		0.0557	
									Total =	23929		0.3988	

According to (Figure 8.7 - Chart for the Rapid Design of Channels),
For gradient 1:150, 375UC or above will be suitable for A
For gradient 1:150, 300UC or above will be suitable for B
For gradient 1:150, 375UC or above will be suitable for C
For gradient 1:150, 300UC or above will be suitable for D

Total Peak runoff for B and C = 10784 liter/min
For gradient 1:150, 375UC or above will be suitable for B and C

Total Peak runoff for C and D = 11321 liter/min
For gradient 1:150, 375UC or above will be suitable for B and C

Total Peak runoff for A and B = 12608 liter/min
For gradient 1:150, 450UC or above will be suitable for A and B

Total Peak runoff for the whole site = 23929 liter/min
For gradient 1:150, 525UC or above will be suitable for B and C

$t = 0.14465\ L/H^{0.2}A^{0.1}$
$= 0.14465*65/1^{0.2}*169280^{0.1}$
$= 3.551$ min

$i = 1.111*a/(t+b)^{c}$
$= 454.9/(3.551+3.44)^{0.412}$
$= 226.8$ mm/hr

(10 yrs return period, Table 3d, Corrigendum 2024, SDM)

(11.1% increase due to climate change)

Figure 1 - Chart for the rapid design of U-shaped and half-round channels up to 600 mm

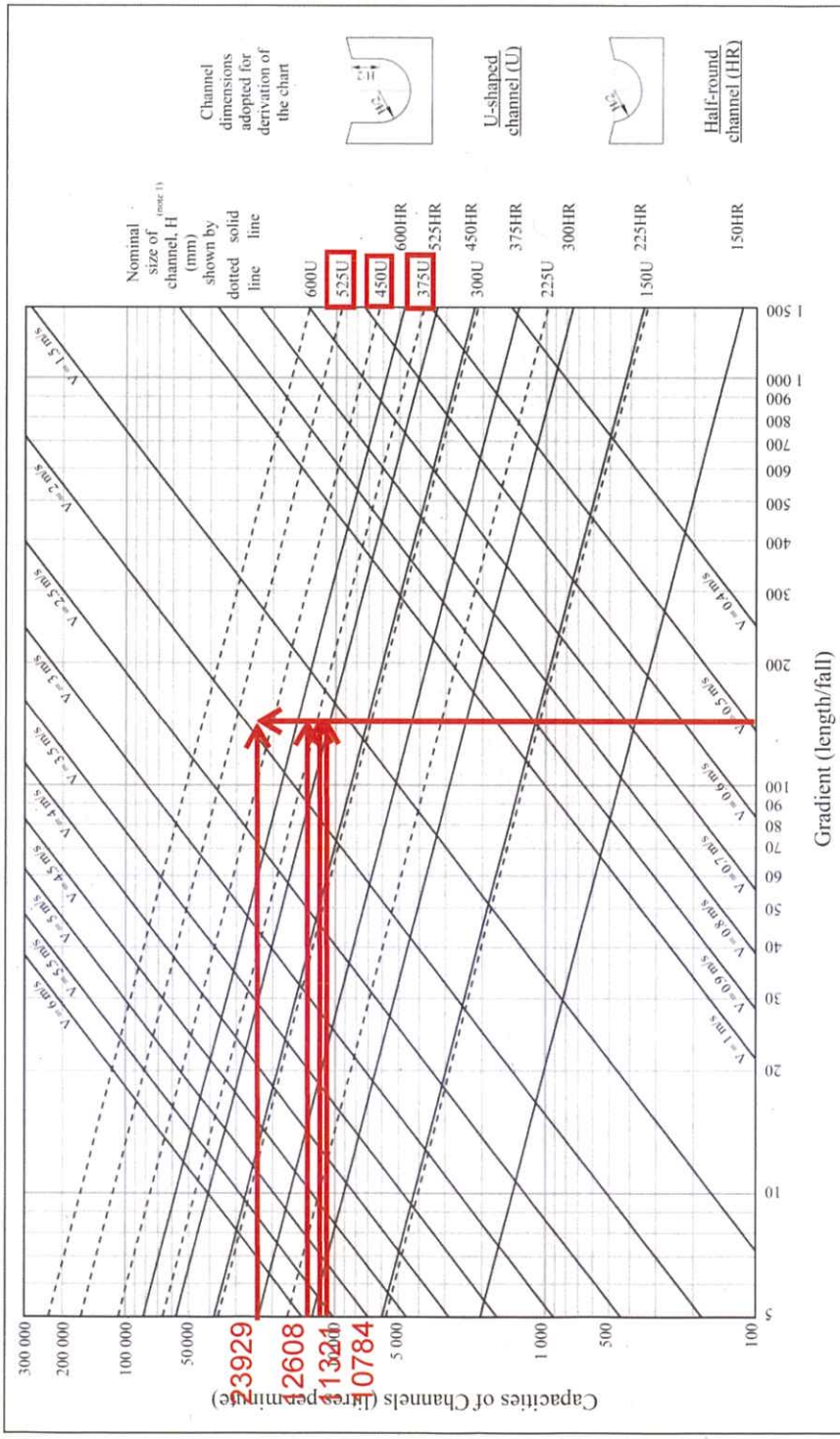

Note: (1) Refer to the latest CEDD Standard Drawings for the details of U-shaped (U) and half-round (HR) channels.

Figure 1 - Chart for the rapid design of U-shaped and half-round channels up to 600 mm

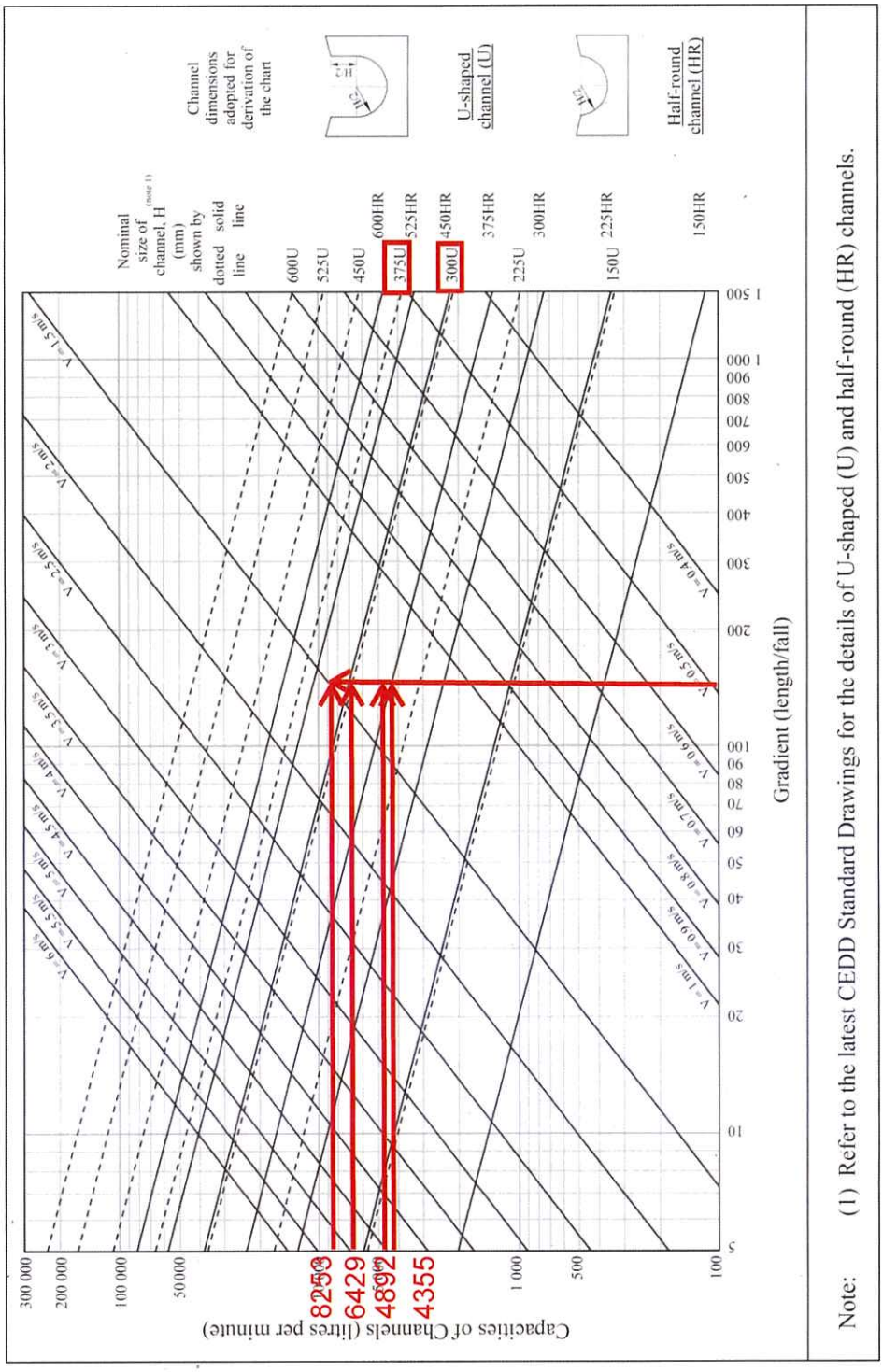

Note: (1) Refer to the latest CEDD Standard Drawings for the details of U-shaped (U) and half-round (HR) channels.

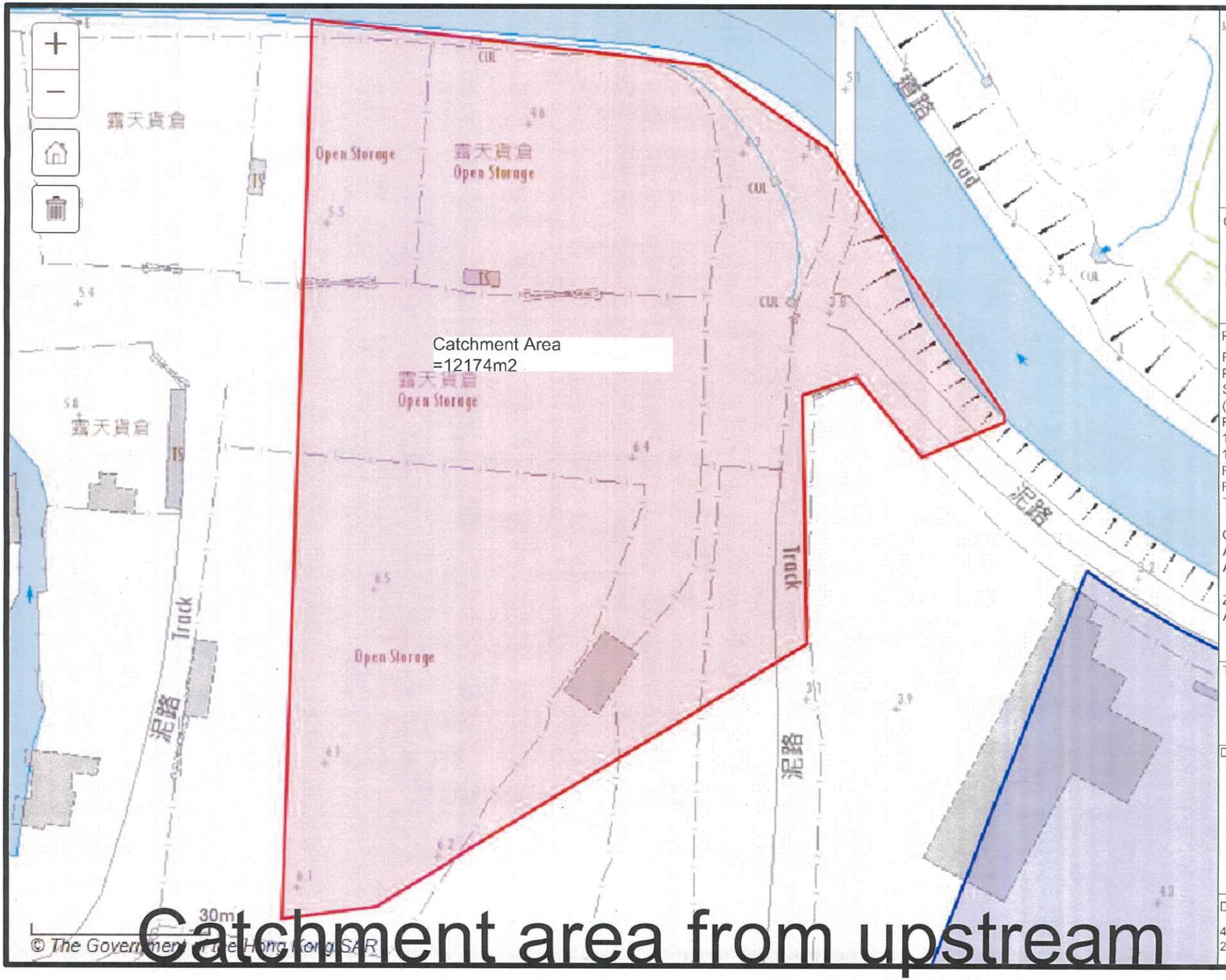

Legend:

- Proposed 300UC/375UC 450UC(1:150) with cast iron cover
- Existing UPVC
- Proposed Catchpit
- Existing Stormwater Manhole

Company:

恆協工程有限公司
Handship Engineering Company Limited

Project:

Proposed Temporary Place of Recreation, Sports or Culture (Hobby Farm) for a Period of 5 Years at Lots 1750A4 RP (Part), 1750A5 RP and 1750A6 RP (Part) in D.D. 107, Fung Kat Heung, Kam Tin, Yuen Long

OZP:
Application No.
A/YL-KTN/1049

Zoning:
Agriculture

Title:

Catchment Area (Con't)

Dwg No: Fig.3b

File: DD107 Lot1750

Date: 4th Dec 2020

Catchment area from upstream

Company:	Handship Engineering Company Limited
Project:	Proposed drainage at Lots 1750A4 RP (Par t), 1750A5 RP and 1750A6 RP (Part) in D.D. 107, Fung Kat Heung, Kam Tin, Yuen Long
Date:	17/10/2024

CHECK EXISTING 600mm dia pipes (SWD1065691)

Upstream flow from 375UC and 600UC

Upstream, Catchment Area	=	12174	m^2
	=	0.012174	km^2

Peak runoff in m^3/s	=	0.278	x	0.25	x	250	mm/hr	x	0.012174	km^2
	=	0.211523	m^3/s							
	=	12691	liter/min							

For gradient 1:100, existing 375UC has adequate capacity for stormwater collection system

Total Peak runoff to SWD1065691	=	0.6	m^3/s	=	36621	liter/min

(Site catchment and upstream area)
Check existing 600mm dia. Pipes (SWD1065691) by Colebrook-White Equation

$$V = -\sqrt{(8gDs)}\log\left(\frac{ks}{3.7D} + \frac{2.51v}{D\sqrt{(2gDs)}}\right)$$

where :

V	=			mean velocity (m/s)
g	=	9.81	m/s2	gravitational acceleration (m/s2)
D	=	0.6	m	internal pipe diameter (m)
ks	=	0.00015	m	hydraulic pipeline roughness (m) (Table 5, from DSD Sewerage Manual, concrete pipe)
v	=	1.14E-06	m2/s	kinematic viscosity of fluid (m2/s)
s	=	0.01		hydraulic gradient
Pipe area	=	0.283	m2	
10% reduction of flow area	=	0.254	m2	

Therefore, design V of pipe capacity	=	2.806	m/s	>	Design velocity	=	0.6103	m3/s	/	0.254
						=	2.15866	m/s		==>O.K.

Exsiting 600mm dia. Pipe have spare capacity to accommodate the flow from the application site

Figure 1 - Chart for the rapid design of U-shaped and half-round channels up to 600 mm

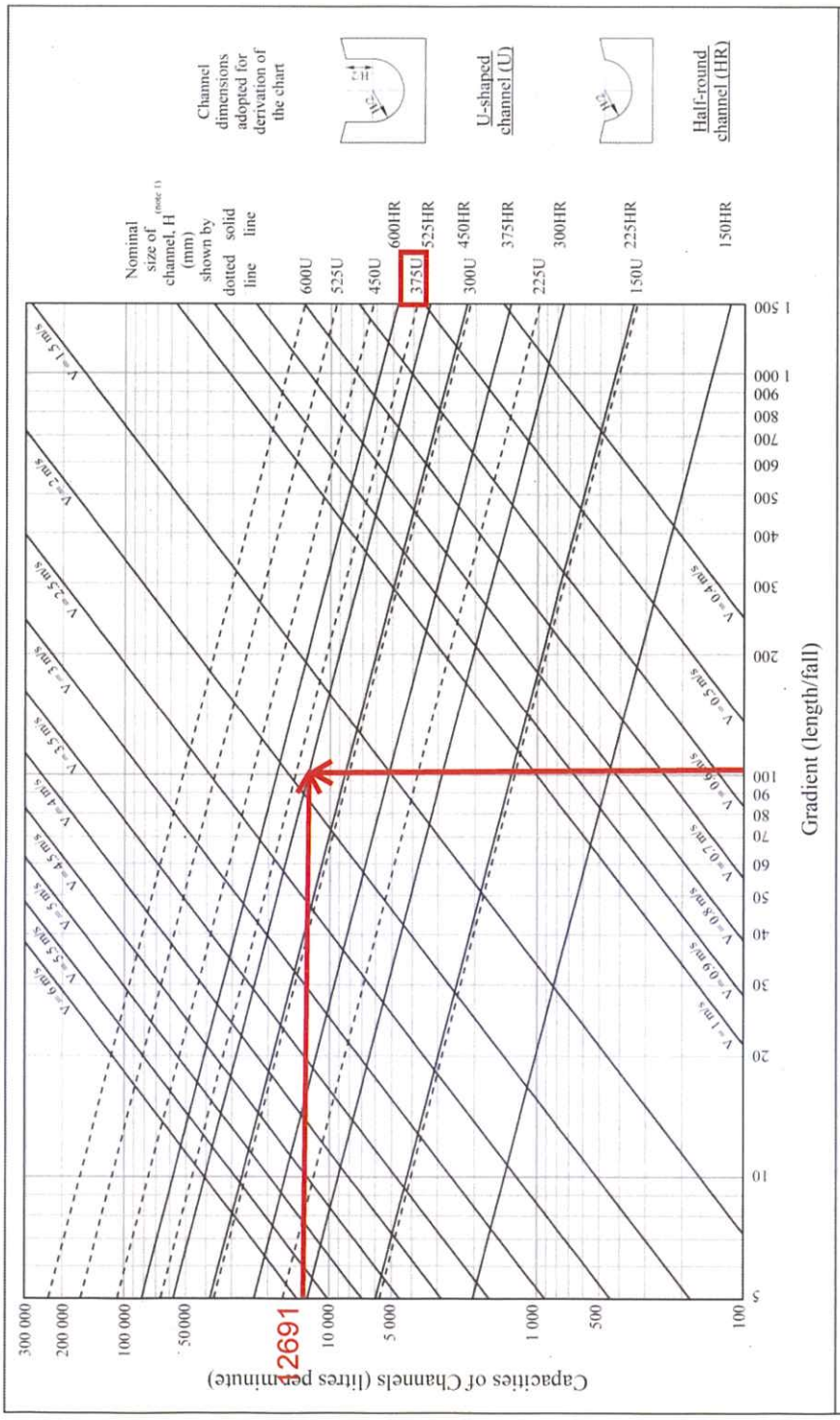

Note: (1) Refer to the latest CEDD Standard Drawings for the details of U-shaped (U) and half-round (HR) channels.

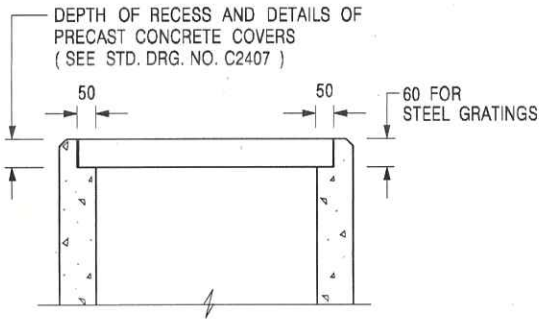

ALTERNATIVE TOP SECTION FOR PRECAST CONCRETE COVERS / GRATINGS

NOTES:

1. ALL DIMENSIONS ARE IN MILLIMETRES.
2. ALL CONCRETE SHALL BE GRADE 20 /20.
3. CONCRETE SURFACE FINISH SHALL BE CLASS U2 OR F2 AS APPROPRIATE.
4. FOR DETAILS OF JOINT, REFER TO STD. DRG. NO. C2413.
5. CONCRETE TO BE COLOURED AS SPECIFIED.
6. UNLESS REQUESTED BY THE MAINTENANCE PARTY AND AS DIRECTED BY THE ENGINEER, CATCHPIT WITH TRAP IS NORMALLY NOT PREFERRED DUE TO PONDING PROBLEM.
7. UPON THE REQUEST FROM MAINTENANCE PARTY, DRAIN PIPES AT CATCHPIT BASE CAN BE USED BUT THIS IS FOR CATCHPITS LOCATED AT SLOPE TOE ONLY AND AS DIRECTED BY THE ENGINEER.
8. FOR CATCHPITS CONSTRUCTED ON OR ADJACENT TO A FOOTPATH, STEEL GRATINGS (SEE DETAIL 'A' ON STD. DRG. NO. C2405) OR CONCRETE COVERS (SEE STD. DRG. NO. C2407) SHALL BE PROVIDED AS DIRECTED BY THE ENGINEER.
9. IF INSTRUCTED BY THE ENGINEER, HANDRAILING (SEE DETAIL 'G' ON STD. DRG. NO. C2405; EXCEPT ON THE UPSLOPE SIDE) IN LIEU OF STEEL GRATINGS OR CONCRETE COVERS CAN BE ACCEPTED AS AN ALTERNATIVE SAFETY MEASURE FOR CATCHPITS NOT ON A FOOTPATH NOR ADJACENT TO IT. TOP OF THE HANDRAILING SHALL BE 1 000 mm MIN. MEASURED FROM THE ADJACENT GROUND LEVEL.
10. MINIMUM INTERNAL CATCHPIT WIDTH SHALL BE 1 000 mm FOR CATCHPITS WITH A HEIGHT EXCEEDING 1 000 mm MEASURED FROM THE INVERT LEVEL TO THE ADJACENT GROUND LEVEL. AND, STEP IRONS (SEE DSD STD. DRG. NO. DS1043) AT 300 c/c STAGGERED SHALL BE PROVIDED. THICKNESS OF CATCHPIT WALL FOR INSTALLATION OF STEP IRONS SHALL BE INCREASED TO 150 mm.
11. FOR RETROFITTING AN EXISTING CATCHPIT WITH STEEL GRATING, SEE DETAIL 'F' ON STD. DRG. NO. C2405.
12. SUBJECT TO THE APPROVAL OF THE ENGINEER, OTHER MATERIALS CAN ALSO BE USED AS COVERS / GRATINGS.

REF.	REVISION	SIGNATURE	DATE
-	FORMER DRG. NO. C2406J.	Original Signed	03.2015

CATCHPIT WITH TRAP

(SHEET 2 OF 2)

CEDD CIVIL ENGINEERING AND DEVELOPMENT DEPARTMENT

SCALE 1 : 20

DATE JAN 1991

DRAWING NO. C2406 /2

卓越工程 建設香港

We Engineer Hong Kong's Development

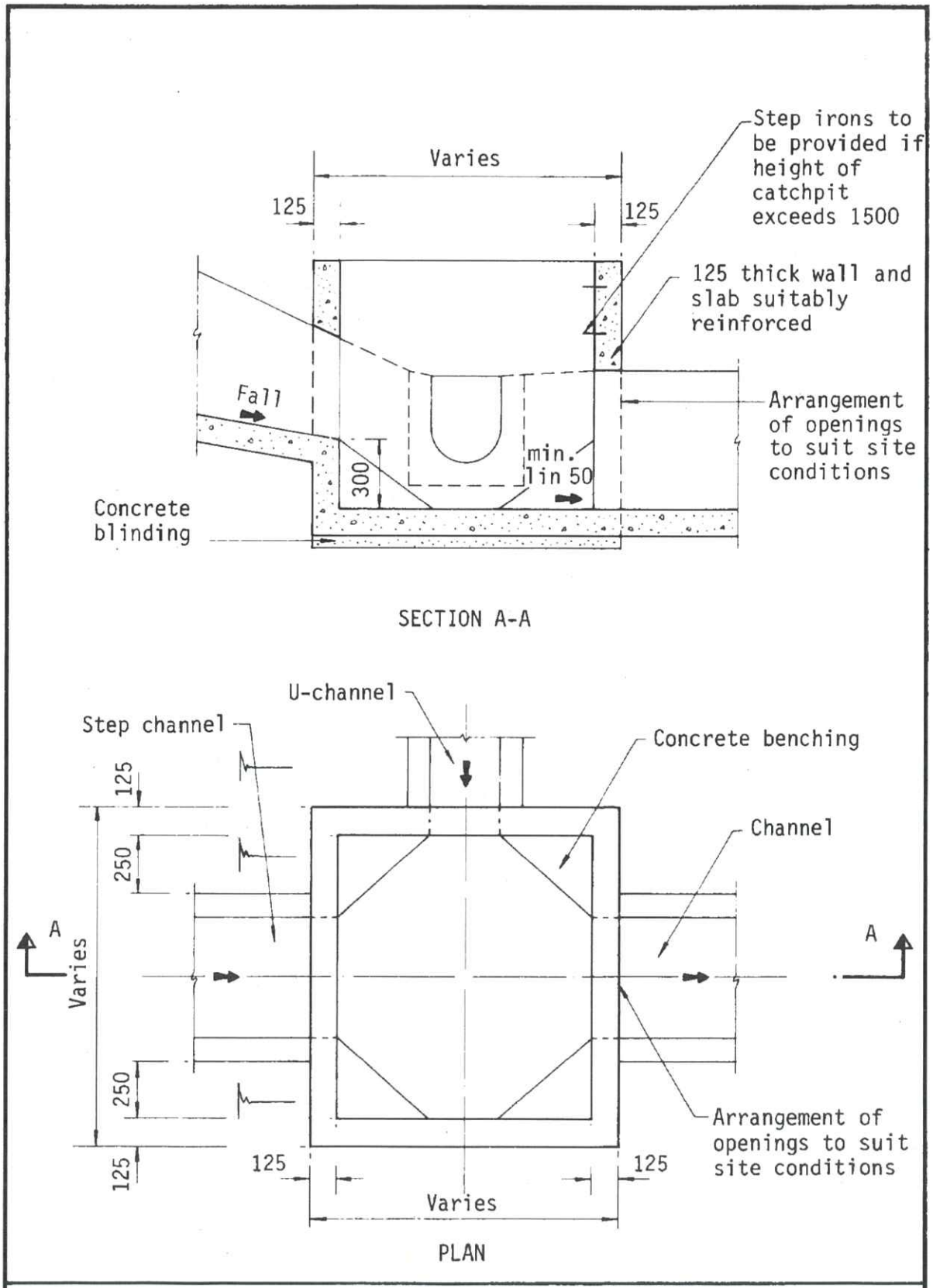

Note : All dimensions in millimetres

Figure 8.10 - Typical Details of Catchpits

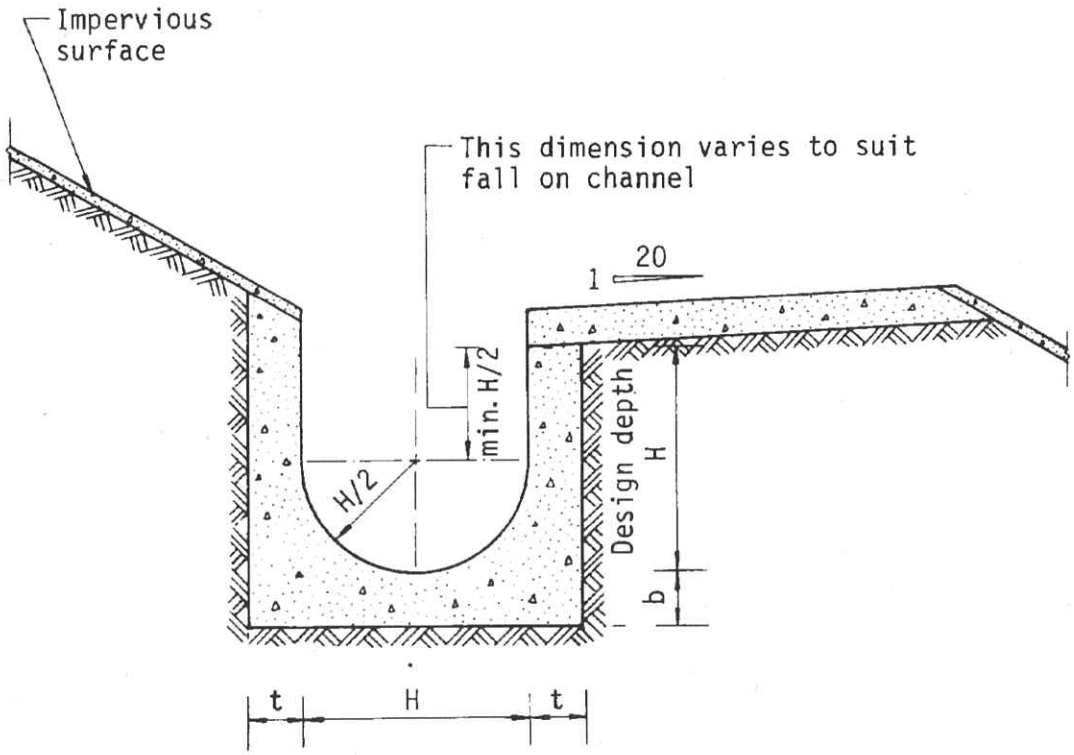

Dimensions of U - channel

Nominal size of channel H (mm)	Thickness t (mm)	Thickness b (mm)
225 to 600	150	150
675 to 1200	175	225

Figure 8.11 - Typical U-channel Details

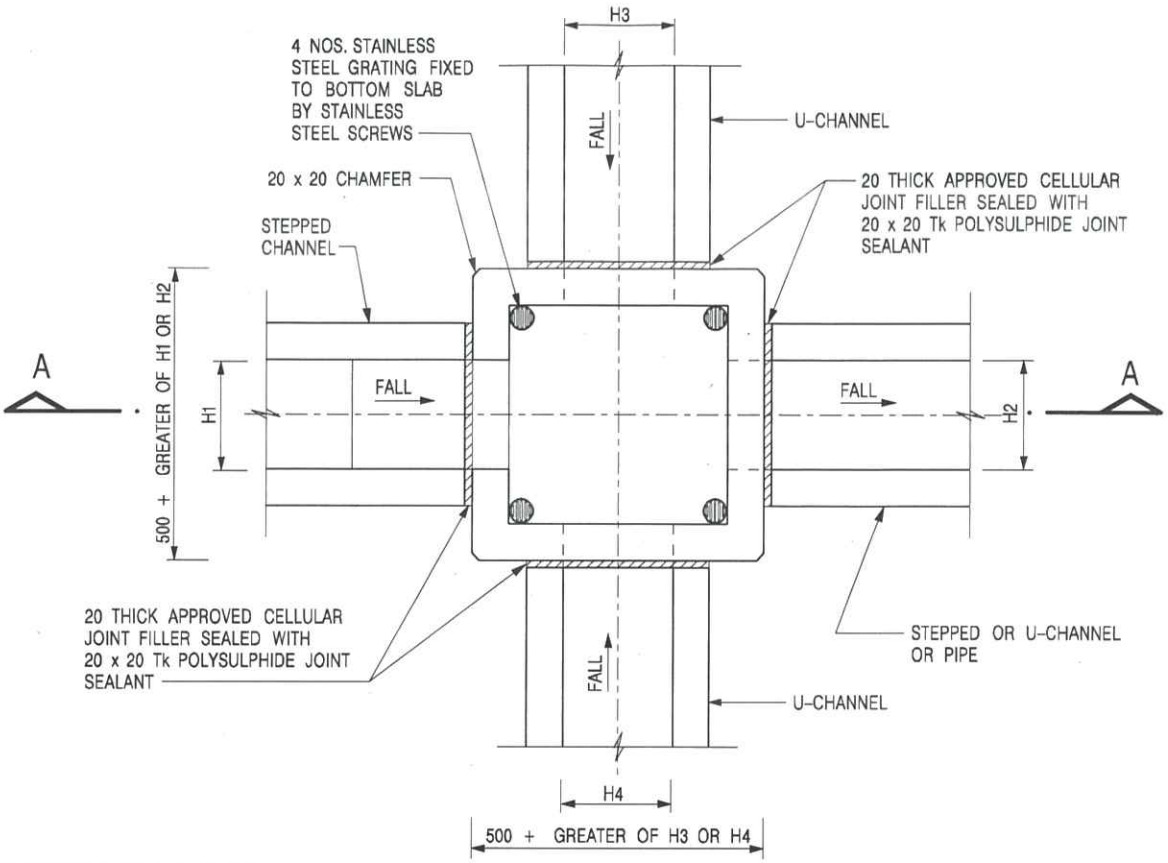

PLAN

NOMINAL SIZE (LARGEST OF H1, H2, H3 & H4)	B
300 – 600	150
675 – 900	175

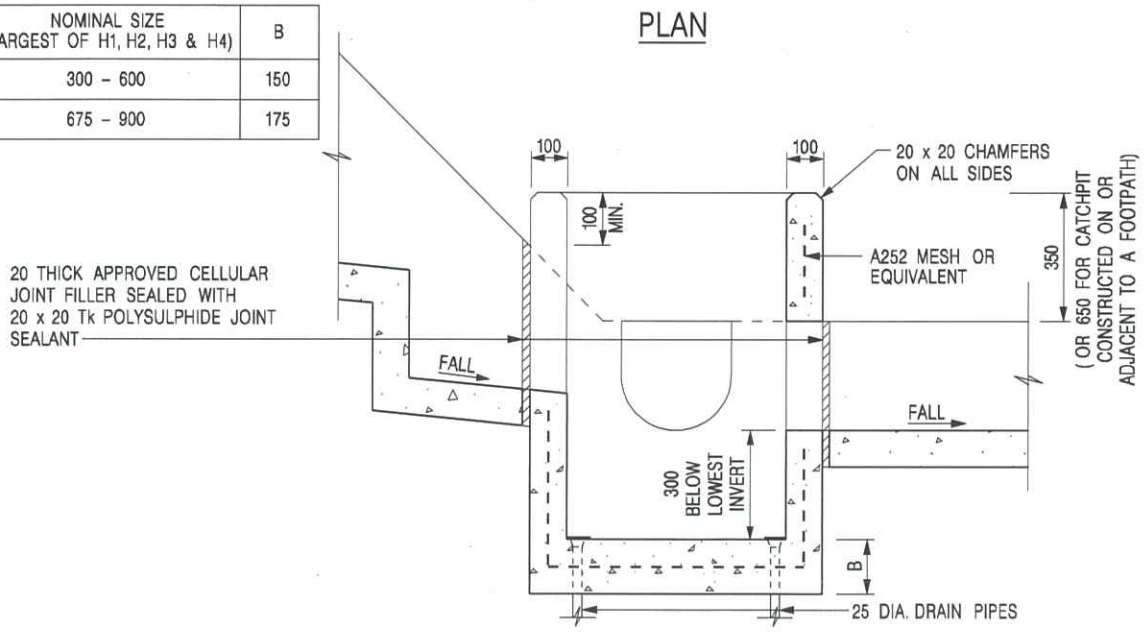

SECTION A – A

NOTES:

1. ALL DIMENSIONS ARE IN MILLIMETRES.
2. REFER TO SHEET 2 FOR OTHER NOTES.

REF.	REVISION	SIGNATURE	DATE
–	FORMER DRG. NO. C2406J.	Original Signed	03.2015

CATCHPIT WITH TRAP

(SHEET 1 OF 2)

CEDD CIVIL ENGINEERING AND DEVELOPMENT DEPARTMENT

SCALE 1 : 20

DATE JAN 1991

DRAWING NO. C2406 /1

卓越工程 建設香港

We Engineer Hong Kong's Development

FIRE SERVICES NOTES:

1. HOSE REEL SYSTEM

1.1 HOSE REEL SHALL BE PROVIDED AT POSITIONS AS INDICATED ON PLANS.
1.2 THERE SHALL BE SUFFICIENT HOSE REELS TO ENSURE THAT EVERY PART OF THE BUILDING CAN BE REACHED BY A LENGTH OF NOT MORE THAN 30M OF HOSE REEL TUBING. ONE ACTUATING POINT AND ONE AUDIO WARNING DEVICE TO BE LOCATED AT EACH HR POINT. THE ACTUATING POINT SHOULD INCLUDE FACILITIES FOR THE FIRE PUMP START DEVICE INITIATION.
1.3 A MODIFIED HOSE REEL SYSTEM OF 2,000 LITRES WATER TANK TO BE PROVIDED FOR THE ENTIRE BUILDING AS INDICATED ON PLAN.
1.4 NO FIRE SERVICES INLET TO BE PROVIDED FOR THE MODIFIED HOSE REEL SYSTEM.
1.5 WATER SUPPLY FOR THE MODIFIED HOSE REEL SYSTEM TO BE SINGLE END FEED FROM THE GOVERNMENT TOWN MAIN.
1.6 TWO FIXED FIRE PUMPS (DUTY/STANDBY) TO BE PROVIDED AT F.S. & PUMP ROOM.
1.7 THE HR SYSTEM INSTALLED SHOULD BE IN ACCORDANCE WITH PARA. 5.14 OF THE CODE OF PRACTICE FOR MINIMUM FIRE SERVICE INSTALLATION AND EQUIPMENT 2022.
1.8 AN INSTRUCTION PLATE SHALL BE PROVIDED NEXT TO THE BREAK GLASS UNIT FOR OPERATION OF HOSE REEL.

2. FIRE ALARM SYSTEM

2.1 FIRE ALARM SYSTEM SHALL BE PROVIDED THROUGHOUT THE ENTIRE BUILDING IN ACCORDANCE WITH BS 5839-1: 2017 AND FSD CIRCULAR LETTER N0.6/2021. ONE ACTUATING POINT AND ONE AUDIO WARNING DEVICE SHOULD BE LOCATED AT EACH HOSE REEL POINT. THE ACTUATION POINT SHOULD INCLUDE FACILITIES FOR FIRE PUMP START AND AUDIO / VISUAL WARNING DEVICE INITIATION.
2.2 AN ADDRESSABLE TYPE FIRE ALARM PANEL TO BE PROVIDED AND LOCATED INSIDE G/F F.S. PUMP ROOM.

3. MISCELLANEOUS F.S. INSTALLATION

3.1 PORTABLE FIRE EXTINGUISHER WITH SPECIFIED TYPE AND CAPACITY TO BE PROVIDED AT LOCATIONS AS INDICATED ON PLANS.
3.2 SUFFICIENT EMERGENCY LIGHTING SHALL BE PROVIDED THROUGHOUT THE ENTIRE BUILDINGS/STRUCTURES IN ACCORDANCE WITH BS 5266-1:2016, BS EN 1838:2013 AND FSD CL 4/2021.
3.3 SUFFICIENT DIRECTIONAL AND EXIT SIGN SHALL BE PROVIDED IN ACCORDANCE WITH BS 5266: PART 1 AND FSD CIRCULAR LETTER 5/2008.
3.4 NO EMERGENCY GENERATOR TO BE PROVIDED FOR SERVING THE EMERGENCY POWER. DUPLICATED POWER SUPPLIES FOR ALL FIRE SERVICES INSTALLATIONS COMPRISING A CABLE CONNECTED FROM ELECTRICITY MAINS DIRECTLY BEFORE THE MAIN SWITCH.
3.5 WHEN A VENTILATION/ AIR CONDITIONING CONTROL SYSTEM TO A BUILDING IS PROVIDED, IT SHALL STOP MECHANICALLY INDUCED AIR MOVEMENT WITHIN A DESIGNATED FIRE COMPARTMENT.
3.6 NO DYNAMIC SMOKE EXTRACTION SYSTEM SHALL BE PROVIDED SINCE FIRE COMPARTMENT NOT EXCEEDING 7000 CUBIC METRES AND THE AGGREGATE AREA OF OPENABLE WINDOWS OF THE RESPECTIVE COMPARTMENT EXCEEDS 6.25% OF THE FLOOR AREA OF THAT COMPARTMENT.

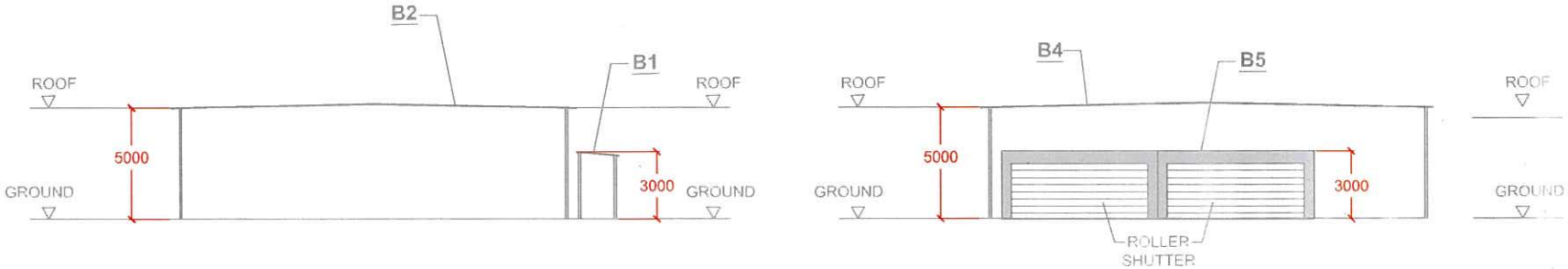

SECTION PLAN OF STRUCTURE B1 - B2 AND B4 - B5

(INDICATIVE ONLY)

NORTH
W E
S

PLANNING CONSULTANT
R-Riches Property Consultants Ltd.

PROJECT
TEMPORARY PLACE OF RECREATION, SPORTS OR CULTURE (HOBBY FARM, FISHING AND PRAWNING GROUND), BARBECUE SITE, HOLIDAY CAMP AND SHOP AND SERVICES WITH ANCILLARY FACILITIES FOR A PERIOD OF 3 YEARS AND ASSOCIATED FILLING OF LAND

SITE LOCATION
VARIOUS LOTS IN D.D. 107, KAM TIN, YUEN LONG, NEW TERRITORIES

SCALE: NOT TO SCALE

DRAWN BY	DATE
MN	12.8.2024
CHECKED BY	DATE
APPROVED BY	DATE

DWG. TITLE: FSIs PROPOSAL (1/2)

DWG NO: Annex II | VER: 001

DEVELOPMENT PARAMETERS

APPLICATION SITE AREA	: 9,375 m^2	(ABOUT)
COVERED AREA	: 2,208 m^2	(ABOUT)
UNCOVERED AREA	: 7,167 m^2	(ABOUT)
PLOT RATIO	: 0.24	(ABOUT)
SITE COVERAGE	: 24 %	(ABOUT)
NO. OF STRUCTURE	: 24	
DOMESTIC GFA	: NOT APPLICABLE	
NON-DOMESTIC GFA	2,208 m^2	(ABOUT)
TOTAL GFA	: 2,208 m^2	(ABOUT)
BUILDING HEIGHT	: 2.8m - 5m	(ABOUT)
NO. OF STOREY	: 1	

PARKING AND LOADING/UNLOADING PROVISIONS

NO. OF PRIVATE CAR PARKING SPACE	: 18
DIMENSION OF PARKING SPACE	: 5m (L) X 2.5m (W)
NO. OF L/UL SPACE FOR LIGHT GOODS VEHICLE	: 1
DIMENSION OF L/UL SPACE	: 7m (L) X 3.5m (W)
NO. OF L/UL SPACE FOR LIGHT BUS	: 1
DIMENSION OF L/UL SPACE	: 8m (L) X 3m (W)

STRUCTURE	USE	COVERED AREA	GROSS FLOOR AREA	BUILDING HEIGHT
B1	STORAGE OF TOOLS	24m^2 (ABOUT)	24m^2 (ABOUT)	3m (ABOUT)(1-STOREY)
B2*	RAIN SHELTER FOR CHILDREN PLAYING AREA	227m^2 (ABOUT)	227m^2 (ABOUT)	5m (ABOUT)(1-STOREY)
B3*	RAIN SHELTER FOR BARBECUE	193m^2 (ABOUT)	193m^2 (ABOUT)	5m (ABOUT)(1-STOREY)
B4*	RAIN SHELTER FOR BARBECUE	221m^2 (ABOUT)	221m^2 (ABOUT)	5m (ABOUT)(1-STOREY)
B5	SHOP AND SERVICES	COVERED BY B4	56m^2 (COVERED BY B4)	3m (ABOUT)(1-STOREY)
B6*	RAIN SHELTER FOR PARKING SPACE	88m^2 (ABOUT)	88m^2 (ABOUT)	4m (ABOUT)(1-STOREY)
B7*	RAIN SHELTER	93m^2 (ABOUT)	93m^2 (ABOUT)	5m (ABOUT)(1-STOREY)
B8	STORAGE OF TOOLS, RECEPTION	COVERED BY B7	56m^2 (COVERED BY B7)	5m (ABOUT)(1-STOREY)
B9*	RAIN SHELTER FOR PRAWNING	219m^2 (ABOUT)	219m^2 (ABOUT)	5m (ABOUT)(1-STOREY)
B10*	RAIN SHELTER FOR PRAWNING	219m^2 (ABOUT)	219m^2 (ABOUT)	5m (ABOUT)(1-STOREY)
B11*	RAIN SHELTER FOR BARBECUE	221m^2 (ABOUT)	221m^2 (ABOUT)	5m (ABOUT)(1-STOREY)
B12*	RAIN SHELTER FOR BARBECUE	221m^2 (ABOUT)	221m^2 (ABOUT)	5m (ABOUT)(1-STOREY)
B13*	RAIN SHELTER	62m^2 (ABOUT)	62m^2 (ABOUT)	4m (ABOUT)(1-STOREY)
B14	ACTIVITIES ROOM	31m^2 (ABOUT)	31m^2 (ABOUT)	3m (ABOUT)(1-STOREY)
B15	ACTIVITIES ROOM	15m^2 (ABOUT)	15m^2 (ABOUT)	3m (ABOUT)(1-STOREY)
B16*	RAIN SHELTER FOR FISHING	227m^2 (ABOUT)	227m^2 (ABOUT)	5m (ABOUT)(1-STOREY)
B17	PORTABLE TOILET	8m^2 (ABOUT)	8m^2 (ABOUT)	2.8m (ABOUT)(1-STOREY)
B18	PORTABLE TOILET	3m^2 (ABOUT)	3m^2 (ABOUT)	2.8m (ABOUT)(1-STOREY)
B19	PORTABLE TOILET	8m^2 (ABOUT)	8m^2 (ABOUT)	2.8m (ABOUT)(1-STOREY)
B20	PORTABLE TOILET	15m^2 (ABOUT)	15m^2 (ABOUT)	3m (ABOUT)(1-STOREY)
B21	RAIN SHELTER	31m^2 (ABOUT)	31m^2 (ABOUT)	3.5m (ABOUT)(1-STOREY)
B22	STORAGE OF TOOLS	22m^2 (ABOUT)	22m^2 (ABOUT)	3m (ABOUT)(1-STOREY)
B23	RAIN SHELTER	60m^2 (ABOUT)	60m^2 (ABOUT)	3m (ABOUT)(1-STOREY)
B24	METER ROOM	COVERED BY B23	8m^2 (COVERED BY B23)	3m (ABOUT)(1-STOREY)
	TOTAL	2,208 m^2 (ABOUT)	2,208 m^2 (ABOUT)	

*4 SIDE OPENED SHELTER

FIRE SERVICE INSTALLATIONS

- EXIT SIGN
- EMERGENCY LIGHT
- 5 KG CO2 TYPE FIRE EXTINGUISHER
- 4 KG DRY POWER TYPE FIRE EXTINGUISHER
- 2,000 LITRES FIBRE GLASS F.S. WATER TANK
- HOSE REEL SET

LEGEND

- APPLICATION SITE
- STRUCTURE (ENCLOSED)
- STRUCTURE (CANOPY)
- PARKING SPACE (PC)
- LOADING / UNLOADING SPACE (LGV)
- LOADING / UNLOADING SPACE (LB)
- INGRESS / EGRESS

PLANNING CONSULTANT: R-Riches Property Consultants Ltd

PROJECT: TEMPORARY PLACE OF RECREATION, SPORTS OR CULTURE (HOBBY FARM, FISHING AND PRAWNING GROUND), BARBECUE SITE, HOLIDAY CAMP AND SHOP AND SERVICES WITH ANCILLARY FACILITIES FOR A PERIOD OF 3 YEARS AND ASSOCIATED FILLING OF LAND

SITE LOCATION: VARIOUS LOTS IN D.D. 107, KAM TIN, YUEN LONG, NEW TERRITORIES

SCALE: 1 : 500 @ A3

DRAWN BY: MN	DATE: 12.8.2024
CHECKED BY:	DATE:
APPROVED BY:	DATE:

DWG. TITLE: FSIs PROPOSAL (2/2)

DWG. NO.: Annex II | VER.: 001

寄件者: Louis Tse [redacted]
寄件日期: 2024年11月08日星期五 11:00
收件者: tpbpd/PLAND
副本: Andrea Wing Yin YAN/PLAND; Jet Sze Jet CHEUNG/PLAND; Bon Tang; Matthew Ng; Christian Chim; Danny Ng; Grace Wong; Kevin Lam
主旨: [FI] S.16 Application No. A/YL-KTN/1049 - FI to address departmental comments
附件: FI2 for A_YL-KTN_1049 (20241108).pdf

郵件標幟: 待處理
標幟狀態: 已標幟

類別: Internet Email

Dear Sir,

Attached herewith the further information to address departmental comments of the subject application.

Should you require more information, please do not hesitate to contact me. Thank you for your kind attention.

Kind Regards,

Louis TSE | Town Planner
R-riches Group (HK) Limited

R-riches Property Consultants Limited | R-riches Planning Limited | R-riches Construction Limited
[redacted]

R-Riches
Property Consultants Ltd.

盈卓物業
顧問有限公司

Our Ref. : DD107 Lot 1750A4 RP & VL
Your Ref. : TPB/A/YL-KTN/1049

The Secretary,
Town Planning Board,
15/F, North Point Government Offices,
333 Java Road,
North Point, Hong Kong

By Email

8 November 2024

Dear Sir,

2nd Further Information

Temporary Place of Recreation, Sports or Culture (Hobby Farm, Fishing and Prawning Ground and Barbecur Site), Shop and Services and Holiday Camp with Ancillary Facilities for a Period of 3 Years and Associated Filling of Land in "Agriculture" Zone, Various Lots in D.D. 107, Kam Tin, Yuen Long, New Territories

(S.16 Planning Application No. A/YL-KTN/1049)

We are writing to submit further information to address departmental comments on the subject application (**Appendix I**).

Should you require more information regarding the application, please contact our Mr. Danny NG at [redacted] or the undersigned at your convenience. Thank you for your kind attention.

Yours faithfully,

For and on behalf of
R-riches Property Consultants Limited

Louis TSE
Town Planner

cc DPO/FSYLE, PlanD (Attn.: Ms. Andrea YAN email: awyyan@pland.gov.hk)
(Attn.: Mr. Jet CHEUNG email: jsjcheung@pland.gov.hk)

Responses-to-Comments

Temporary Place of Recreation, Sports or Culture (Hobby Farm, Fishing and Prawning Ground and Barbecur Site), Shop and Services and Holiday Camp with Ancillary Facilities for a Period of 3 Years and Associated Filling of Land in "Agriculture" Zone, Various Lots in D.D. 107, Kam Tin, Yuen Long, New Territories

(Application No. A/YL-KTN/1049)

(i) A RtoC Table:

Departmental Comments		Applicant's Responses
1. Comments of the Director of Fire Services (D of FS) (Contact Person: Mr. CHUNG Wing-hei; Tel.: 2733 7737)		
(a)	Legend of all FSIs (i.e. modified hose reel system, fire alarm system, emergency lighting, directional and exit signs and portable fire extinguishers) shall be provided.	Legend of all fire service installations (FSIs) are provided. Please refer to the revised FSIs proposal (**Annex I**).

FIRE SERVICES NOTES:

1. HOSE REEL SYSTEM

1.1 HOSE REEL SHALL BE PROVIDED AT POSITIONS AS INDICATED ON PLANS.
1.2 THERE SHALL BE SUFFICIENT HOSE REELS TO ENSURE THAT EVERY PART OF THE BUILDING CAN BE REACHED BY A LENGTH OF NOT MORE THAN 30M OF HOSE REEL TUBING. ONE ACTUATING POINT AND ONE AUDIO WARNING DEVICE TO BE LOCATED AT EACH HR POINT. THE ACTUATING POINT SHOULD INCLUDE FACILITIES FOR THE FIRE PUMP START DEVICE INITIATION.
1.3 A MODIFIED HOSE REEL SYSTEM OF 2,000 LITRES WATER TANK TO BE PROVIDED FOR THE ENTIRE BUILDING AS INDICATED ON PLAN.
1.4 NO FIRE SERVICES INLET TO BE PROVIDED FOR THE MODIFIED HOSE REEL SYSTEM.
1.5 WATER SUPPLY FOR THE MODIFIED HOSE REEL SYSTEM TO BE SINGLE END FEED FROM THE GOVERNMENT TOWN MAIN.
1.6 TWO FIXED FIRE PUMPS (DUTY/STANDBY) TO BE PROVIDED AT F.S. & PUMP ROOM.
1.7 THE HR SYSTEM INSTALLED SHOULD BE IN ACCORDANCE WITH PARA. 5.14 OF THE CODE OF PRACTICE FOR MINIMUM FIRE SERVICE INSTALLATION AND EQUIPMENT 2022.
1.8 AN INSTRUCTION PLATE SHALL BE PROVIDED NEXT TO THE BREAK GLASS UNIT FOR OPERATION OF HOSE REEL.

2. FIRE ALARM SYSTEM

2.1 FIRE ALARM SYSTEM SHALL BE PROVIDED THROUGHOUT THE ENTIRE BUILDING IN ACCORDANCE WITH BS 5839-1: 2017 AND FSD CIRCULAR LETTER N0.6/2021. ONE ACTUATING POINT AND ONE AUDIO WARNING DEVICE SHOULD BE LOCATED AT EACH HOSE REEL POINT. THE ACTUATION POINT SHOULD INCLUDE FACILITIES FOR FIRE PUMP START AND AUDIO / VISUAL WARNING DEVICE INITIATION.
2.2 AN ADDRESSABLE TYPE FIRE ALARM PANEL TO BE PROVIDED AND LOCATED INSIDE G/F F.S. PUMP ROOM.

3. MISCELLANEOUS F.S. INSTALLATION

3.1 PORTABLE FIRE EXTINGUISHER WITH SPECIFIED TYPE AND CAPACITY TO BE PROVIDED AT LOCATIONS AS INDICATED ON PLANS.
3.2 SUFFICIENT EMERGENCY LIGHTING SHALL BE PROVIDED THROUGHOUT THE ENTIRE BUILDINGS/STRUCTURES IN ACCORDANCE WITH BS 5266-1:2016, BS EN 1838:2013 AND FSD CL 4/2021.
3.3 SUFFICIENT DIRECTIONAL AND EXIT SIGN SHALL BE PROVIDED IN ACCORDANCE WITH BS 5266: PART 1 AND FSD CIRCULAR LETTER 5/2008.
3.4 NO EMERGENCY GENERATOR TO BE PROVIDED FOR SERVING THE EMERGENCY POWER. DUPLICATED POWER SUPPLIES FOR ALL FIRE SERVICES INSTALLATIONS COMPRISING A CABLE CONNECTED FROM ELECTRICITY MAINS DIRECTLY BEFORE THE MAIN SWITCH.
3.5 WHEN A VENTILATION/ AIR CONDITIONING CONTROL SYSTEM TO A BUILDING IS PROVIDED, IT SHALL STOP MECHANICALLY INDUCED AIR MOVEMENT WITHIN A DESIGNATED FIRE COMPARTMENT.
3.6 NO DYNAMIC SMOKE EXTRACTION SYSTEM SHALL BE PROVIDED SINCE FIRE COMPARTMENT NOT EXCEEDING 7000 CUBIC METRES AND THE AGGREGATE AREA OF OPENABLE WINDOWS OF THE RESPECTIVE COMPARTMENT EXCEEDS 6.25% OF THE FLOOR AREA OF THAT COMPARTMENT.

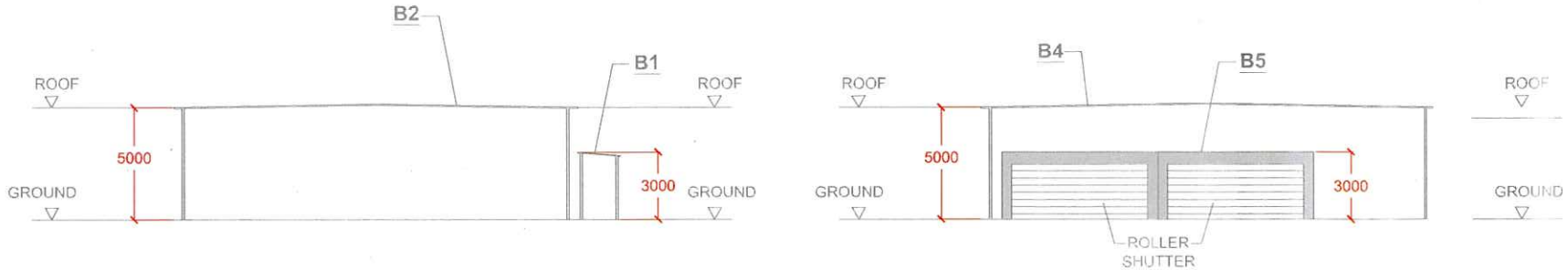

SECTION PLAN OF STRUCTURE B1 - B2 AND B4 - B5

(INDICATIVE ONLY)

NORTH
W E
S

PLANNING CONSULTANT
R-Riches Property Consultants Ltd.

PROJECT
TEMPORARY PLACE OF RECREATION, SPORTS OR CULTURE (HOBBY FARM, FISHING AND PRAWNING GROUND), BARBECUE SITE, HOLIDAY CAMP AND SHOP AND SERVICES WITH ANCILLARY FACILITIES FOR A PERIOD OF 3 YEARS AND ASSOCIATED FILLING OF LAND

SITE LOCATION
VARIOUS LOTS IN D.D. 107, KAM TIN, YUEN LONG, NEW TERRITORIES

SCALE
NOT TO SCALE

DRAWN BY	DATE
MN	5.11.2024
CHECKED BY	DATE
APPROVED BY	DATE

DWG. TITLE
FSIs PROPOSAL (1/2)

DWG NO.	VER
ANNEX I	003

DEVELOPMENT PARAMETERS

APPLICATION SITE AREA	: 9,375 m^2	(ABOUT)
COVERED AREA	: 2,208 m^2	(ABOUT)
UNCOVERED AREA	: 7,167 m^2	(ABOUT)
PLOT RATIO	: 0.24	(ABOUT)
SITE COVERAGE	: 24 %	(ABOUT)
NO. OF STRUCTURE	: 24	
DOMESTIC GFA	: NOT APPLICABLE	
NON-DOMESTIC GFA	: 2,208 m^2	(ABOUT)
TOTAL GFA	: 2,208 m^2	(ABOUT)
BUILDING HEIGHT	: 2.8m - 5m	(ABOUT)
NO. OF STOREY	: 1	

PARKING AND LOADING/UNLOADING PROVISIONS

NO. OF PRIVATE CAR PARKING SPACE	: 18
DIMENSION OF PARKING SPACE	: 5m (L) X 2.5m (W)
NO. OF L/UL SPACE FOR LIGHT GOODS VEHICLE	: 1
DIMENSION OF L/UL SPACE	: 7m (L) X 3.5m (W)
NO. OF L/UL SPACE FOR LIGHT BUS	: 1
DIMENSION OF L/UL SPACE	: 8m (L) X 3m (W)

STRUCTURE	USE	COVERED AREA	GROSS FLOOR AREA	BUILDING HEIGHT
B1	STORAGE OF TOOLS	24m^2 (ABOUT)	24m^2 (ABOUT)	3m (ABOUT)(1-STOREY)
B2*	RAIN SHELTER FOR CHILDREN PLAYING AREA	227m^2 (ABOUT)	227m^2 (ABOUT)	5m (ABOUT)(1-STOREY)
B3*	RAIN SHELTER FOR BARBECUE	193m^2 (ABOUT)	193m^2 (ABOUT)	5m (ABOUT)(1-STOREY)
B4*	RAIN SHELTER FOR BARBECUE	221m^2 (ABOUT)	221m^2 (ABOUT)	5m (ABOUT)(1-STOREY)
B5	SHOP AND SERVICES	COVERED BY B4	56m^2 (COVERED BY B4)	3m (ABOUT)(1-STOREY)
B6*	RAIN SHELTER FOR PARKING SPACE	88m^2 (ABOUT)	88m^2 (ABOUT)	4m (ABOUT)(1-STOREY)
B7*	RAIN SHELTER	93m^2 (ABOUT)	93m^2 (ABOUT)	5m (ABOUT)(1-STOREY)
B8	STORAGE OF TOOLS, RECEPTION	COVERED BY B7	56m^2 (COVERED BY B7)	5m (ABOUT)(1-STOREY)
B9*	RAIN SHELTER FOR PRAWNING	219m^2 (ABOUT)	219m^2 (ABOUT)	5m (ABOUT)(1-STOREY)
B10*	RAIN SHELTER FOR PRAWNING	219m^2 (ABOUT)	219m^2 (ABOUT)	5m (ABOUT)(1-STOREY)
B11*	RAIN SHELTER FOR BARBECUE	221m^2 (ABOUT)	221m^2 (ABOUT)	5m (ABOUT)(1-STOREY)
B12*	RAIN SHELTER FOR BARBECUE	221m^2 (ABOUT)	221m^2 (ABOUT)	5m (ABOUT)(1-STOREY)
B13*	RAIN SHELTER	62m^2 (ABOUT)	62m^2 (ABOUT)	4m (ABOUT)(1-STOREY)
B14	ACTIVITIES ROOM	31m^2 (ABOUT)	31m^2 (ABOUT)	3m (ABOUT)(1-STOREY)
B15	ACTIVITIES ROOM	15m^2 (ABOUT)	15m^2 (ABOUT)	3m (ABOUT)(1-STOREY)
B16*	RAIN SHELTER FOR FISHING	227m^2 (ABOUT)	227m^2 (ABOUT)	5m (ABOUT)(1-STOREY)
B17	PORTABLE TOILET	8m^2 (ABOUT)	8m^2 (ABOUT)	2.8m (ABOUT)(1-STOREY)
B18	PORTABLE TOILET	3m^2 (ABOUT)	3m^2 (ABOUT)	2.8m (ABOUT)(1-STOREY)
B19	PORTABLE TOILET	8m^2 (ABOUT)	8m^2 (ABOUT)	2.8m (ABOUT)(1-STOREY)
B20	PORTABLE TOILET	15m^2 (ABOUT)	15m^2 (ABOUT)	3m (ABOUT)(1-STOREY)
B21	RAIN SHELTER	31m^2 (ABOUT)	31m^2 (ABOUT)	3.5m (ABOUT)(1-STOREY)
B22	STORAGE OF TOOLS	22m^2 (ABOUT)	22m^2 (ABOUT)	3m (ABOUT)(1-STOREY)
B23	RAIN SHELTER	60m^2 (ABOUT)	60m^2 (ABOUT)	3m (ABOUT)(1-STOREY)
B24	METER ROOM	COVERED BY B23	8m^2 (COVERED BY B23)	3m (ABOUT)(1-STOREY)
	TOTAL	2,208 m^2 (ABOUT)	2,208 m^2 (ABOUT)	

*4 SIDE OPENED SHELTER

FIRE SERVICE INSTALLATIONS

- EXIT SIGN
- EMERGENCY LIGHT
- 5 KG CO2 TYPE FIRE EXTINGUISHER
- 4 KG DRY POWER TYPE FIRE EXTINGUISHER
- SAND BUCKET
- 2,000 LITRES FIBRE GLASS F.S. WATER TANK
- VISUAL FIRE ALARM
- FIRE ALARM BELL
- MANUAL FIRE ALARM CALL POINT
- FIRE HOSE REEL
- FIRE HOSE REEL PUMP WITH ENCLOSURE
- FS CONTROL PANEL

LEGEND

- APPLICATION SITE
- STRUCTURE (ENCLOSED)
- STRUCTURE (CANOPY)
- PARKING SPACE (PC)
- LOADING / UNLOADING SPACE (LGV)
- LOADING / UNLOADING SPACE (LB)
- INGRESS / EGRESS

PLANNING CONSULTANT: R-Riches Property Consultants Ltd.

PROJECT: TEMPORARY PLACE OF RECREATION, SPORTS OR CULTURE (HOBBY FARM, FISHING AND PRAWNING GROUND), BARBECUE SITE, HOLIDAY CAMP AND SHOP AND SERVICES WITH ANCILLARY FACILITIES FOR A PERIOD OF 3 YEARS AND ASSOCIATED FILLING OF LAND

SITE LOCATION: VARIOUS LOTS IN D.D. 107, KAM TIN, YUEN LONG, NEW TERRITORIES

SCALE: 1 : 500 @ A3

DRAWN BY: MN	DATE: 5.11.2024
CHECKED BY	DATE
APPROVED BY	DATE

DWG. TITLE: FSIs PROPOSAL (2/2)

DWG NO.: ANNEX I	VER: 003

寄件者:	Louis Tse [redacted]
寄件日期:	2025年01月03日星期五 11:07
收件者:	tpbpd/PLAND
副本:	Andrea Wing Yin YAN/PLAND; Jet Sze Jet CHEUNG/PLAND; Bon Tang; Matthew Ng; Christian Chim; Danny Ng; Grace Wong; Kevin Lam
主旨:	[FI] S.16 Application No. A/YL-KTN/1049 - FI to address departmental comments
附件:	FI3 for A_YL-KTN_1049 (20250103).pdf
類別:	Internet Email

Dear Sir,

Attached herewith the further information to address departmental comments of the subject application.

Should you require more information, please do not hesitate to contact me. Thank you for your kind attention.

Kind Regards,

Louis TSE | Town Planner
R-riches Group (HK) Limited

R-riches Property Consultants Limited | R-riches Planning Limited | R-riches Construction Limited
[redacted]

R-Riches
Property Consultants Ltd.

盈卓物業顧問有限公司

Our Ref. : DD107 Lot 1750A4 RP & VL
Your Ref. : TPB/A/YL-KTN/1049

The Secretary,
Town Planning Board,
15/F, North Point Government Offices,
333 Java Road,
North Point, Hong Kong

By Email

3 January 2025

Dear Sir,

3rd Further Information

Temporary Place of Recreation, Sports or Culture (Hobby Farm, Fishing and Prawning Ground and Barbecue Site), Shop and Services and Holiday Camp with Ancillary Facilities for a Period of 3 Years and Associated Filling of Land in "Agriculture" Zone, Various Lots in D.D. 107, Kam Tin, Yuen Long, New Territories

(S.16 Planning Application No. A/YL-KTN/1049)

We are writing to submit further information to address departmental comments on the subject application (**Appendix I**).

Should you require more information regarding the application, please contact our Mr. Danny NG at [redacted] or the undersigned at your convenience. Thank you for your kind attention.

Yours faithfully,

For and on behalf of
R-riches Property Consultants Limited

Louis TSE
Town Planner

cc DPO/FSYLE, PlanD (Attn.: Ms. Andrea YAN email: awyyan@pland.gov.hk)
(Attn.: Mr. Jet CHEUNG email: jsjcheung@pland.gov.hk)

[redacted]

Responses-to-Comments

Temporary Place of Recreation, Sports or Culture (Hobby Farm, Fishing and Prawning Ground and Barbecue Site), Shop and Services and Holiday Camp with Ancillary Facilities for a Period of 3 Years and Associated Filling of Land in "Agriculture" Zone, Various Lots in D.D. 107, Kam Tin, Yuen Long, New Territories

(Application No. A/YL-KTN/1049)

(i) A RtoC Table:

Departmental Comments		Applicant's Responses
1. Comments of the Chief Engineer/Mainland North, Drainage Services Department (CE/MN, DSD) (Contact Person: Mr. Terence TANG; Tel.: 2300 1257)		
(a)	According to SDM, return period for 10 years is not correct. Please revise whole calculations.	50 years return period is adopted. Please refer to the revised drainage proposal for details (**Annex I**).
(b)	Sedimentation reduction should be considered.	0.8 factor is applied for sedimentation.
(c)	Please clearly state where the SDM Corrigendum No. 1/2022 was applied in the calculations.	They are adopted in the calculation of i value.
(d)	The ground levels do not tally with available record. Please justify all ground levels indicated in cross sections.	Level justification is presented in the proposal.
(e)	Please justify the proportion of hard paved and soil paved areas in the calculations, and clearly show the proportion in catchment area drawing.	The proportion of hard-paved and soil-paved are revised and presented in the proposal.
(f)	The opening for fence wall should be along the fence wall bottom without horizontal separation.	Revised accordingly.
(g)	Check existing 600mm dia. Pipe: SDM Corrigendum No. 1/2022 and 1/2024 should be considered in the proposed 600mm dia. Pipe checking.	SDM Corrigendum No. 1/2022 and 1/2024 have been considered.

(h)	Check existing 600mm dia. Pipe: Runoff coefficient for hard paved area should not be 0.25 which is underestimated.	Revised accordingly.
(i)	Check existing 600mm dia. Pipe: Please show details steps for total peak runoff conversion (i.e. from m^3/s to liter/min) for reference.	It is presented in the calculation. i.e. (1 m3=1000lit, 1 min=60s).
(j)	Check existing 600mm dia. Pipe: Please advise why total peak runoff to SWD1065691 is $0.6m^3/s$. All detailed steps and assumptions are required to be provided.	Q=0.8VA, it is presented in the calculation.
(k)	Please provide velocity checking for the proposed 600mm dia. UPVC pipe. The velocity should be within 0.7m/s to 3m/s.	Velocity checking is presented in the calculation.

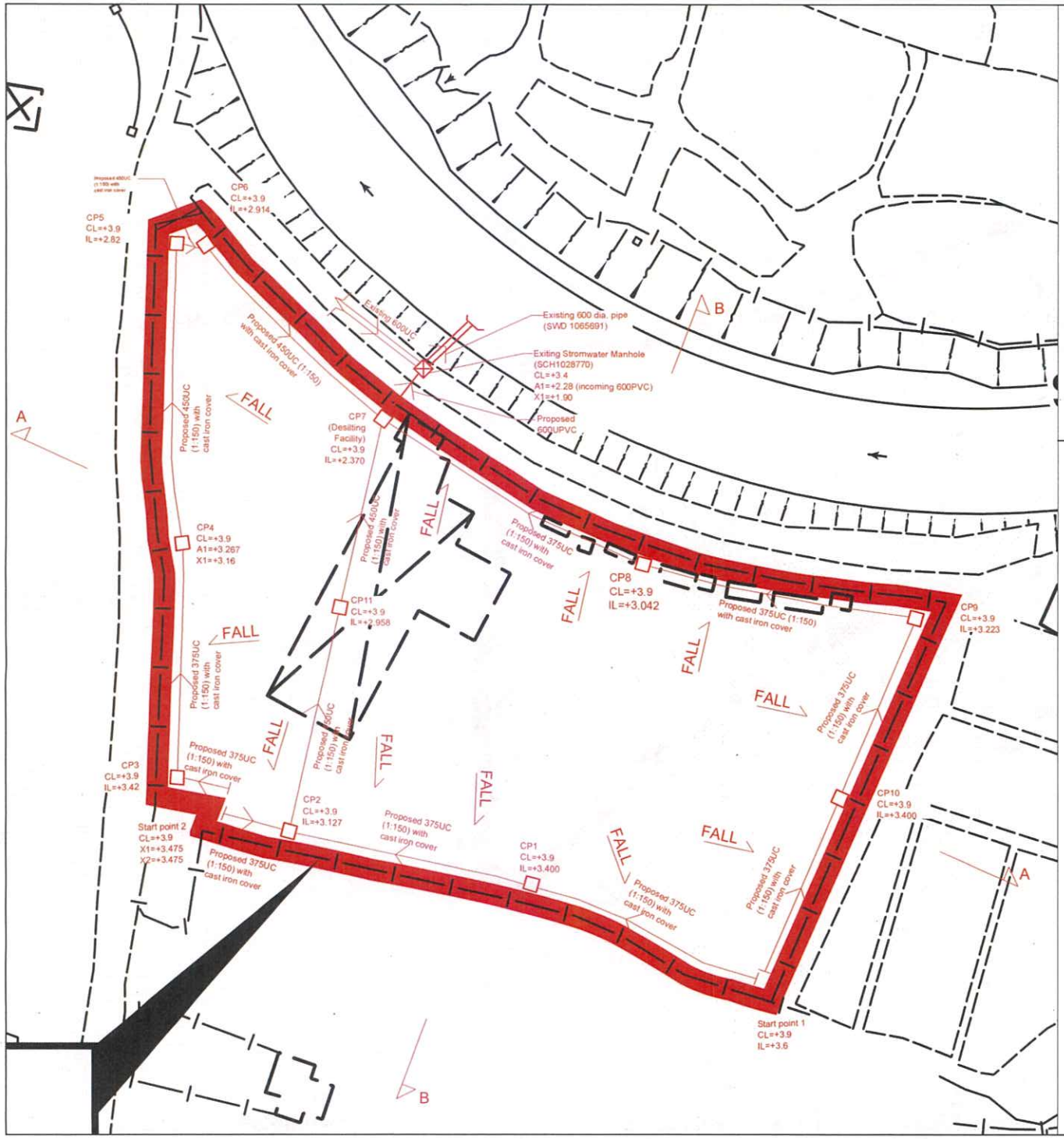

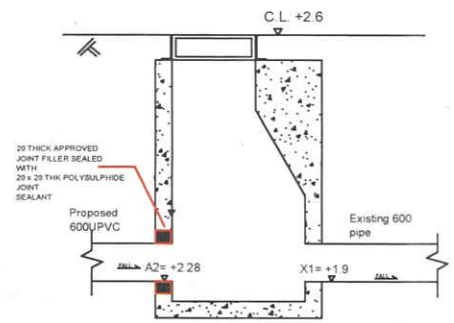

Connection Details of Existing Stormwater Manhole SCH1028769
(For Typical Existing Stormwater Manhole)

Note:

1. Catchpit (CP7) with desilting facility shall follow CEDD standard drawing No. C2406I.

2. Catchpit and UC follows Typical Details of Geotechnical Manual for Slope Fig.8.10 and Fig.8.11 respectively.

3. All UCs are covered by cast iron

4. The inverted level of the connection point shall be verified on site prior the commencement of work

Legend:

- Proposed 300UC/375UC 450UC(1:150) with cast iron cover
- Proposed Catchpit
- Existing Stormwater Manhole

Company:

恒協工程有限公司
Handship Engineering Company Limited

Project:

Proposed Temporary Place of Recreation, Sports or Culture (Hobby Farm) for a Period of 5 Years at Lots 1750A4 RP (Part), 1750A5 RP and 1750A6 RP (Part) in D.D. 107, Fung Kat Heung, Kam Tin, Yuen Long

OZP:
Application No.
A/YL-KTN/1049

Zoning:
Agriculture

Title:

Drainage Proposal-Layout

Dwg No:

Fig.1

File:

DD107
Lot1750

Date:

28-11-2024

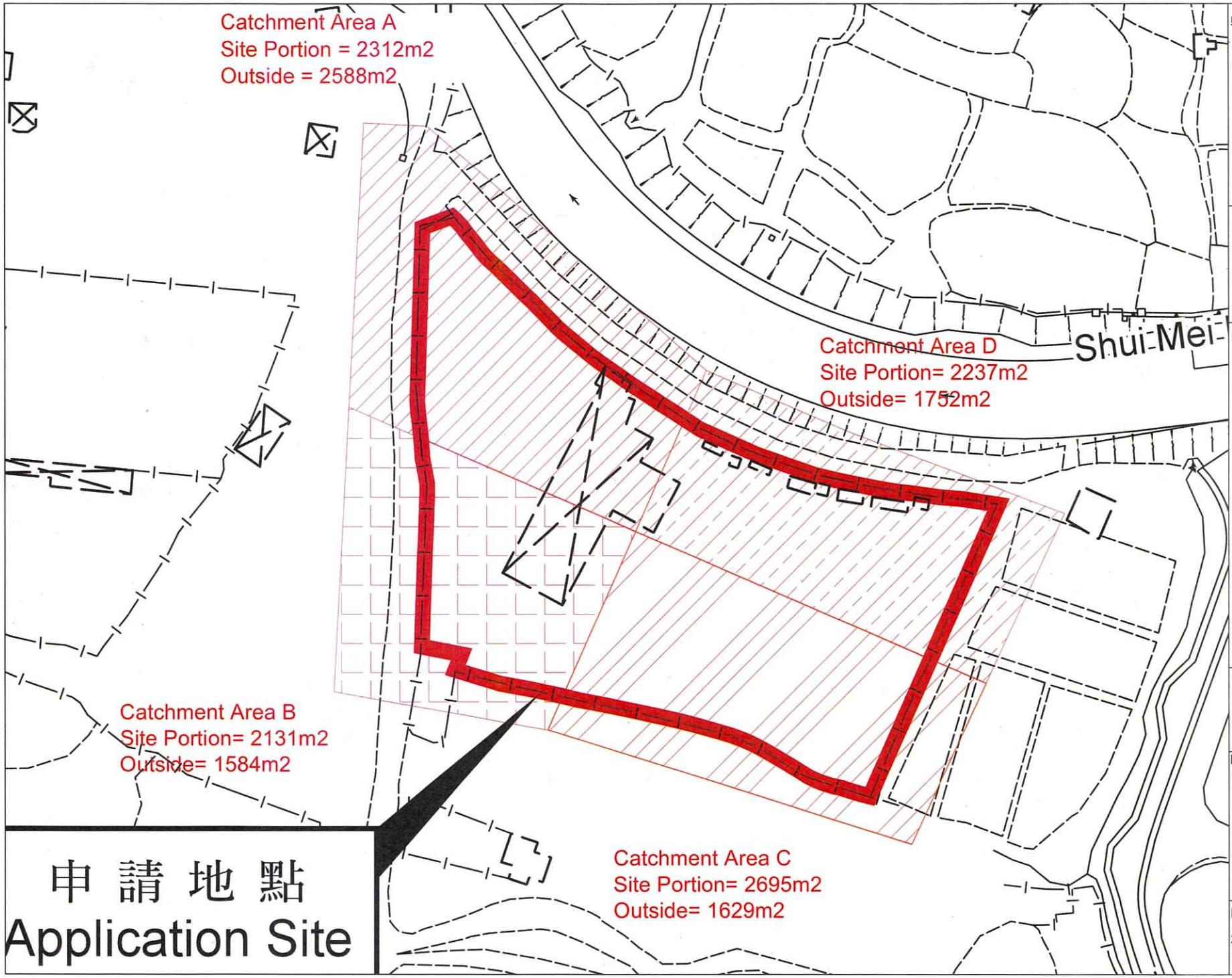

Legend:

- Proposed 300UC/375UC 450UC(1:150) with cast iron cover
- Proposed Catchpit
- Existing Stormwater Manhole

Company:

恆協工程有限公司
Handship Engineering Company Limited

Project:

Proposed Temporary Place of Recreation, Sports or Culture (Hobby Farm) for a Period of 5 Years at Lots 1750A4 RP (Part), 1750A5 RP and 1750A6 RP (Part) in D.D. 107, Fung Kat Heung, Kam Tin, Yuen Long

OZP:
Application No.
A/YL-KTN/1049

Zoning:
Agriculture

Title:

Catchment Area

Dwg No:

Fig.2

File:

DD107
Lot1750

Date:

28-11-2024

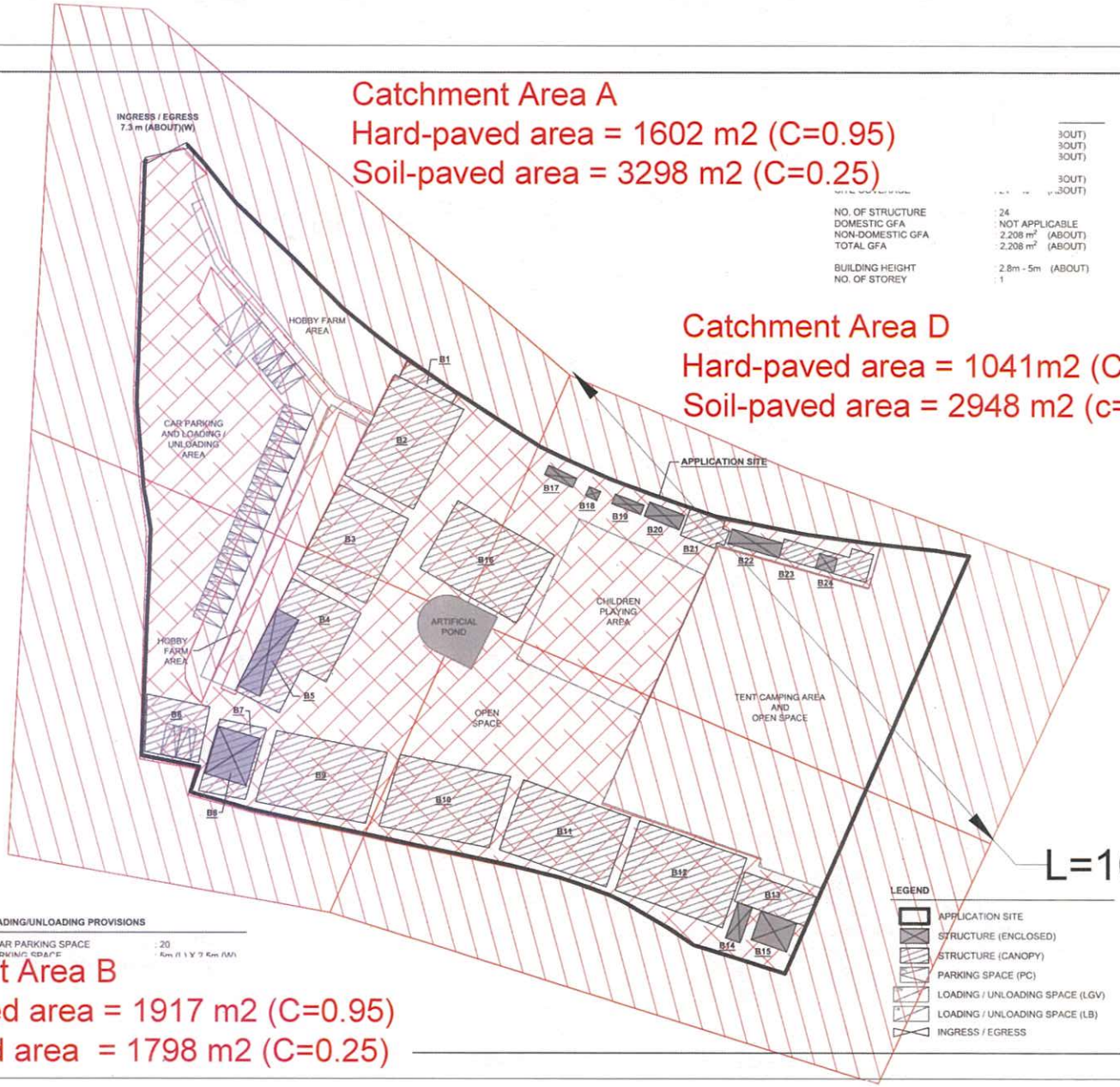

Legend:

Proposed 300UC/375UC 450UC(1:150) with cast iron cover

Proposed Catchpit

Existing Stormwater Manhole

Company:

恆協工程有限公司
Handship Engineering Company Limited

Project:

Proposed Temporary Place of Recreation, Sports or Culture (Hobby Farm) for a Period of 5 Years at Lots 1750A4 RP (Part), 1750A5 RP and 1750A6 RP (Part) in D.D. 107, Fung Kat Heung, Kam Tin, Yuen Long

OZP:
Application No. A/YL-KTN/1049

Zoning:
Agriculture

Title:

Catchment Area

Dwg No:

Fig.3

File:

DD107
Lot1750

Date:

2-1-2025

Hard-paved Area (C=0.95)

Soil-paved Area (C=0.25)

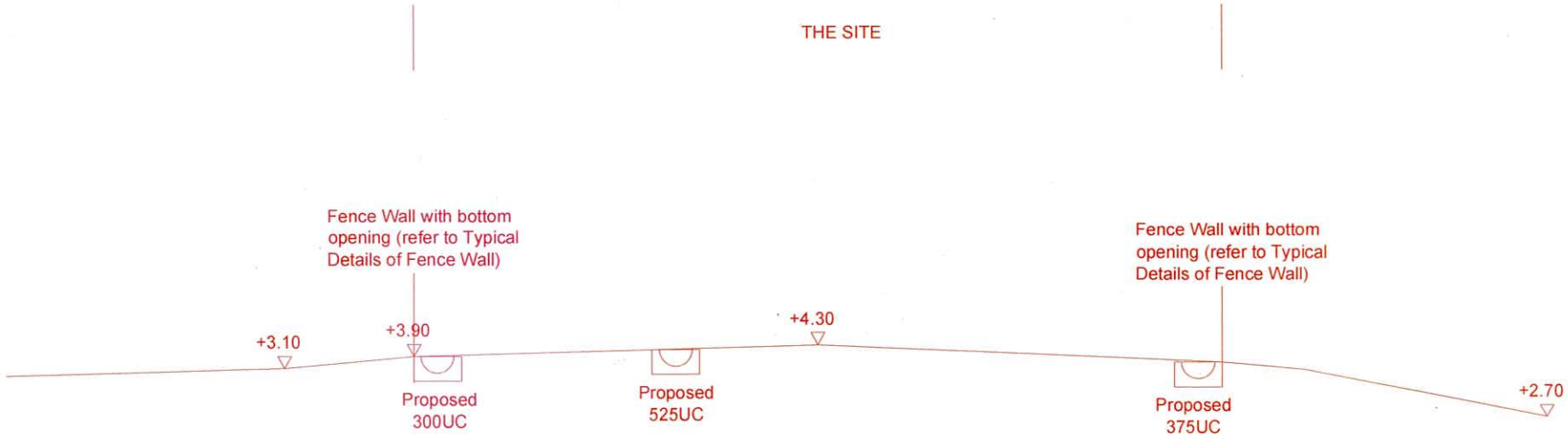

SECTION A-A

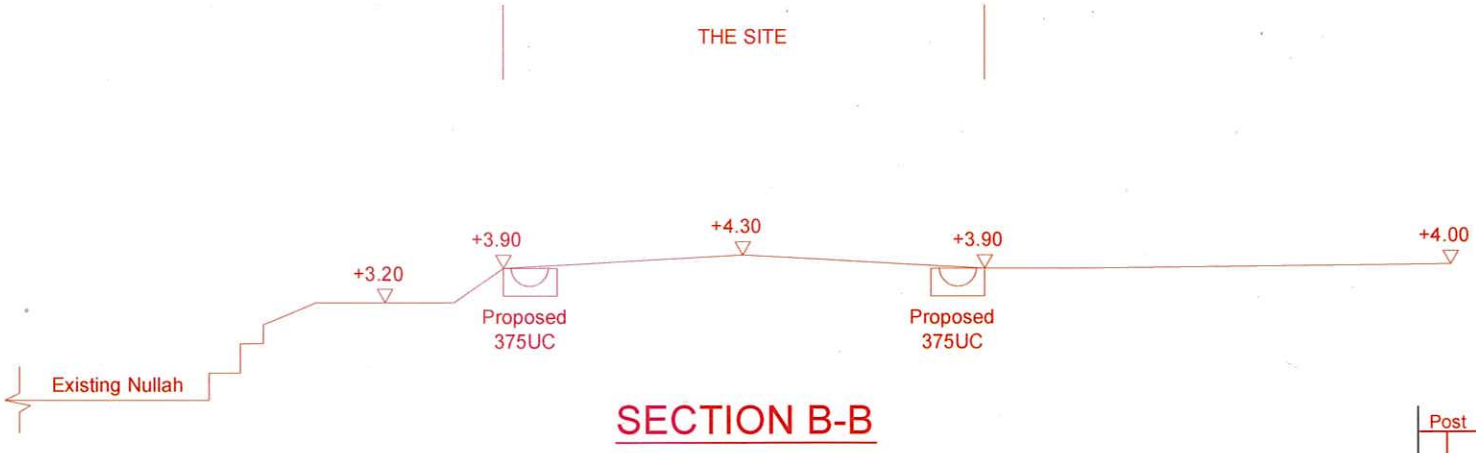

SECTION B-B

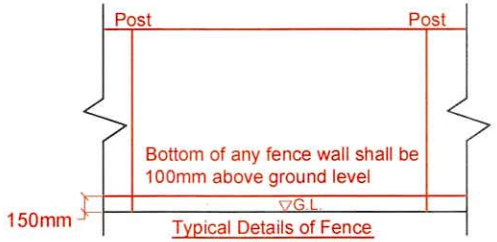

Typical Details of Fence Wall Bottom Opening

Legend:

- Proposed 300UC/375UC 450UC(1:150) with cast iron cover
- Proposed Catchpit
- Existing Stormwater Manhole

Company:

恆協工程有限公司
Handship Engineering Company Limited

Project:

Proposed Temporary Place of Recreation, Sports or Culture (Hobby Farm) for a Period of 5 Years at Lots 1750A4 RP (Part), 1750A5 RP and 1750A6 RP (Part) in D.D. 107, Fung Kat Heung, Kam Tin, Yuen Long

OZP:
Application No. A/YL-KTN/1049

Zoning:
Agriculture

Title:

Section

Dwg No:

Fig.4

File:

DD107
Lot1750

Date:

28-11-2024

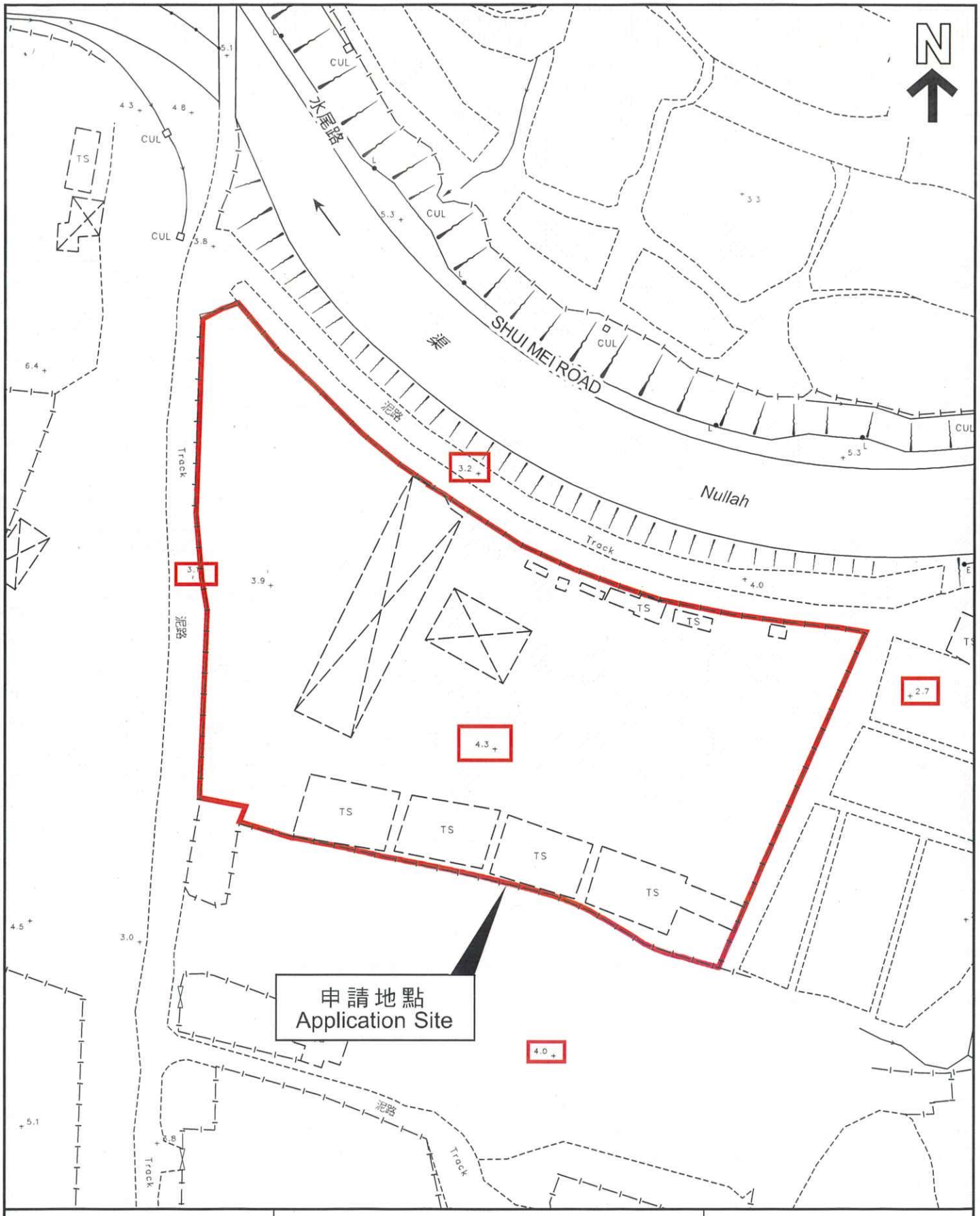

本摘要圖於2024年9月10日擬備，
所根據的資料為測量圖編號
6-NE-7A
EXTRACT PLAN PREPARED ON 10.9.2024
BASED ON SURVEY SHEET No.
6-NE-7A

平面圖 SITE PLAN

申請地點界線只作識別用
APPLICATION SITE BOUNDARY
FOR IDENTIFICATION PURPOSE ONLY

參考編號
REFERENCE No.
A/YL-KTN/1049

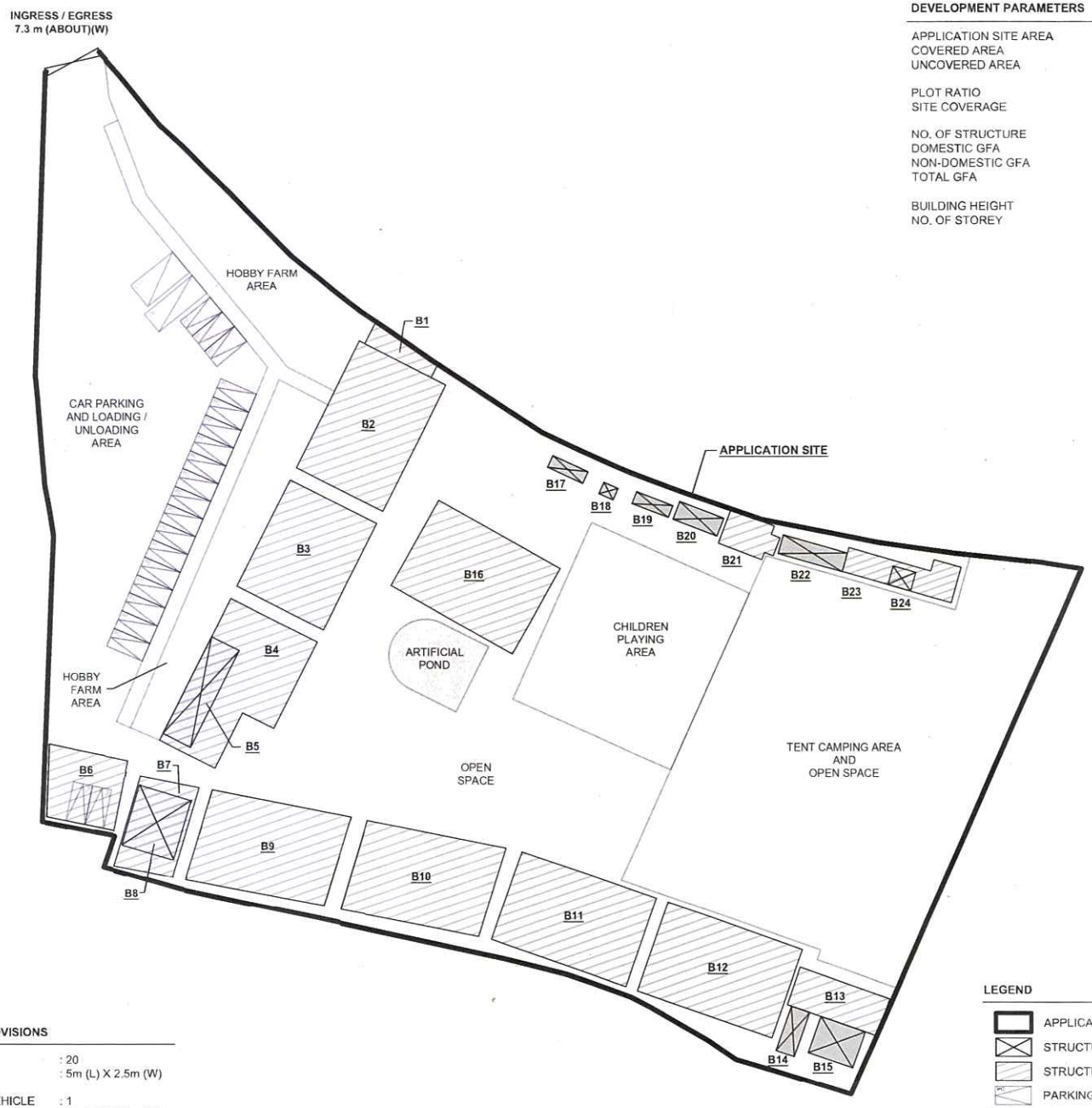

DEVELOPMENT PARAMETERS

APPLICATION SITE AREA	: 9,375 m^2	(ABOUT)
COVERED AREA	: 2,208 m^2	(ABOUT)
UNCOVERED AREA	: 7,167 m^2	(ABOUT)
PLOT RATIO	: 0.24	(ABOUT)
SITE COVERAGE	: 24 %	(ABOUT)
NO. OF STRUCTURE	: 24	
DOMESTIC GFA	: NOT APPLICABLE	
NON-DOMESTIC GFA	: 2,208 m^2	(ABOUT)
TOTAL GFA	: 2,208 m^2	(ABOUT)
BUILDING HEIGHT	: 2.8m - 5m	(ABOUT)
NO. OF STOREY	: 1	

PARKING AND LOADING/UNLOADING PROVISIONS

NO. OF PRIVATE CAR PARKING SPACE	: 20
DIMENSION OF PARKING SPACE	: 5m (L) X 2.5m (W)
NO. OF L/UL SPACE FOR LIGHT GOODS VEHICLE	: 1
DIMENSION OF L/UL SPACE	: 7m (L) X 3.5m (W)
NO. OF L/UL SPACE FOR LIGHT BUS	: 1
DIMENSION OF L/UL SPACE	: 8m (L) X 3m (W)

LEGEND

- APPLICATION SITE
- STRUCTURE (ENCLOSED)
- STRUCTURE (CANOPY)
- PARKING SPACE (PC)
- LOADING / UNLOADING SPACE (LGV)
- LOADING / UNLOADING SPACE (LB)
- INGRESS / EGRESS

NORTH
W E
S

PLANNING CONSULTANT

R-Riches Property Consultants Ltd.

PROJECT

TEMPORARY PLACE OF RECREATION, SPORTS OR CULTURE (HOBBY FARM, FISHING AND PRAWNING GROUND), BARBECUE SITE, HOLIDAY CAMP AND SHOP AND SERVICES WITH ANCILLARY FACILITIES FOR A PERIOD OF 3 YEARS AND ASSOCIATED FILLING OF LAND

SITE LOCATION

VARIOUS LOTS IN D.D. 107, KAM TIN, YUEN LONG, NEW TERRITORIES

SCALE: 1 : 800 @ A4	
DRAWN BY: MN	DATE: 12.8.2024
REVISED BY:	DATE:
APPROVED BY:	DATE:
DWG. TITLE: LAYOUT PLAN	
DWG NO.: PLAN 4	VER.: 001

Company: Handship Engineering Company Limited
Project: Proposed drainage at Lots 1750A4 RP (Par t), 1750A5 RP and 1750A6 RP (Part) in D.D. 107, Fung Kat Heung, Kam Tin, Yuen Long
Date: 29/11/2024

Calculation for Design of Channels:

Catchment Area						c		i		Peak runoff		
	m^2	km^2								liter/min	liter/min	m^3/s
A(Hard-paved)	1602	0.001602				0.95		239.2		6073	9362	0.1012
A(Soil-paved)	3298	0.003298				0.25		239.2		3290		0.0548
B(Hard-paved)	1917	0.001917				0.95		239.2		7267	9060	0.1211
B(Soil-paved)	1798	0.001798	X	0.278	X	0.25	X	239.2	=	1794		0.0299
C(Hard-paved)	2021	0.002021				0.95		239.2		7661	9958	0.1277
C(Soil-paved)	2303	0.002303				0.25		239.2		2297		0.0383
D(Hard-paved)	1041	0.001041				0.95		239.2		3946	6887	0.0658
D(Soil-paved)	2948	0.002948				0.25		239.2		2941		0.0490
Total= 16928									Total =	35267		0.5878

Peripheral Channel in Area A, Catchment Area A + B
Total Peak runoff = **18423** lit/min
Provide 450UC (1:150)

Peripheral Channel in Area B, Catchment Area B
Total Peak runoff = **9060** lit/min
Provide 375UC (1:150)

Peripheral Channel in Area C, Catchment Area C
Total Peak runoff = **9958** lit/min
Provide 375UC (1:150)

Peripheral Channel in Area D, Catchment Area C + D
Total Peak runoff = **16845** lit/min
Provide 450UC (1:150)

U-Channel From CP2 to CP7, Catchment Area B + C
Total Peak runoff = **19018** lit/min
Provide 450UC (1:150)

Pipe From CP7 to SCH1028770, Catchment Area A+ B + C + D
Total Peak runoff = **35267** lit/min

$t = 0.14465\, L/H^{0.2} A^{0.}$
$= 0.14465*101/1^{0.2}*16928^{0.}$
$= 5.518$ min

$i = 1.111*a/(t+b)^{c}$ **(50 yrs return period, Table 3d, Corrigendum 2024, SDM)**
$= 474.6/(5.551+2.9)^{0.81}$
$= 239.2$ mm/hr **(11.1% increase due to climate change, Corrigendum 2022, SDM)**

Colebrook-White Equation

$$V = -\sqrt{(8gDs)}\,\log\left(\frac{ks}{3.7D} + \frac{2.51\nu}{D\sqrt{(2gDs)}}\right)$$

where :

V	=			mean velocity (m/s)
g	=	9.81	m/s2	gravitational acceleration (m/s2)
D	=	0.6	m	internal pipe diameter (m)
ks	=	0.00015	m	hydraulic pipeline roughness (m) (Table 5, from DSD Sewerage Manual, concrete pipe)
v	=	1.14E-06	m2/s	kinematic viscosity of fluid (m2/s)
s	=	0.01		hydraulic gradient
Pipe area	=	0.283	m2	
10% reduction of flow area	=	0.254	m2	
Therefore, design V of pipe capacity	=	2.806	m/s	(Between 0.7 m/s and 3 m/s, OK)
Capacity of Proposed 600 mm dia pipe	=	0.8*V*A		(0.8 factor is adopted for sedimentation)
	=	0.635	m3/s	
	=	38080.94	lit/min	(1 m3 = 1000 lit and 1 min = 60s)
	>	35267	lit/min	OK

Figure 1 - Chart for the rapid design of U-shaped and half-round channels up to 600 mm

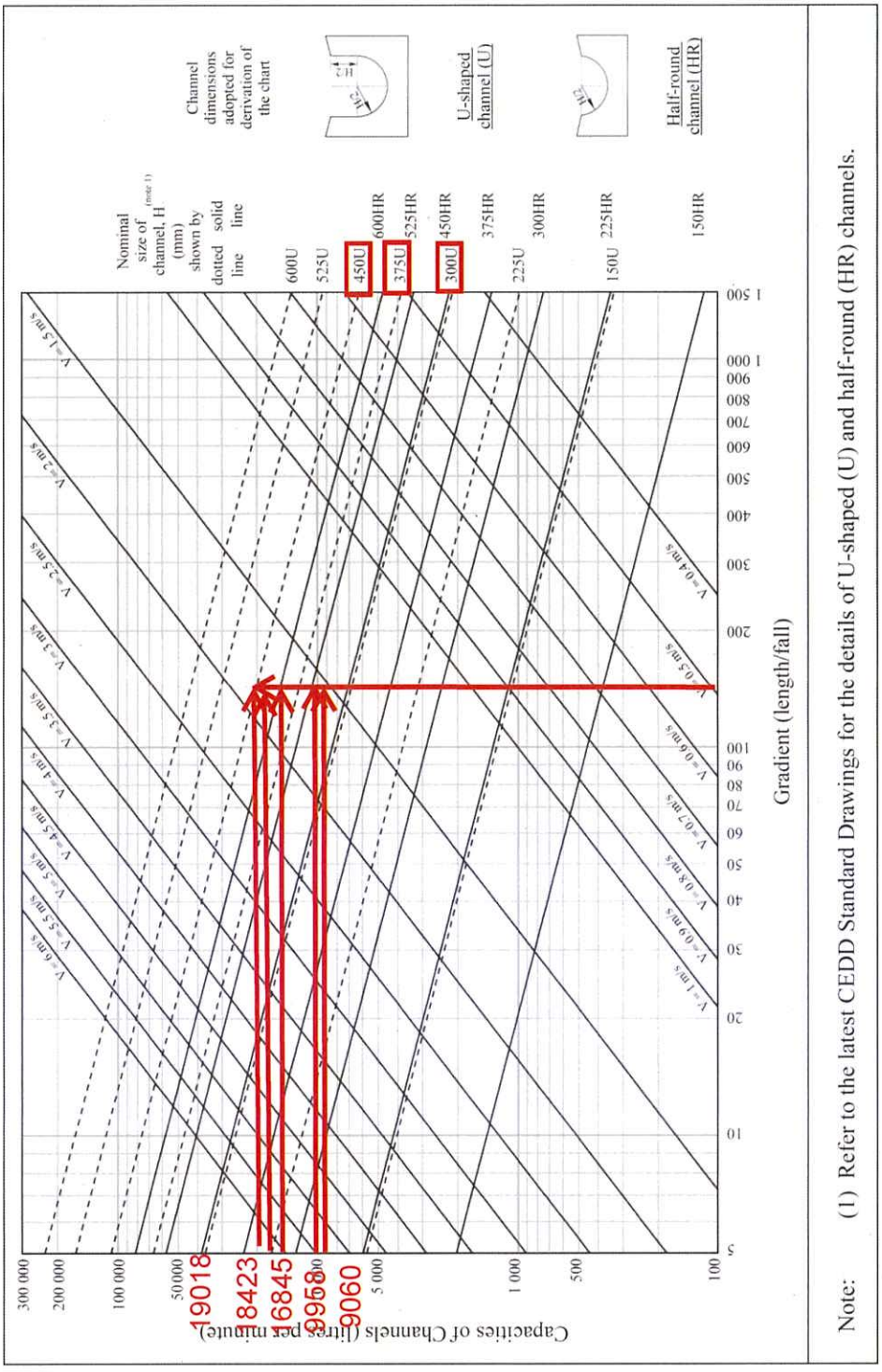

Note: (1) Refer to the latest CEDD Standard Drawings for the details of U-shaped (U) and half-round (HR) channels.

GEOINFO MAP
地理資訊地圖

前往地圖: https://www.map.gov.hk/gm/geo:22.4487,114.0579?z=2257

Total Catchment Area for Existing 600mm dia pipe (SWD1065691)

由「地理資訊地圖」網站提供: https://www.map.gov.hk

Company:	Handship Engineering Company Limited
Project:	Proposed drainage at Lots 1750A4 RP (Par t), 1750A5 RP and 1750A6 RP (Part) in D.D. 107, Fung Kat Heung, Kam Tin, Yuen Long
Date:	29/11/2024

Check Existing 600mm dia Pipe

Total Catchment Area	=	**27262**	**m2**						
Extra Catchment Area	=	27262	-	16928	=	10334	m2		
Extra Runoff	=	0.278CiA							
	=	0.278	*	0.25	*	239.22	*	10334	/1000000
	=	0.171808							
	=	10308.47							
Total Q	=	10308	+	35267					
	=	45575							

For gradient 1:100, existing 375UC has adequate capacity for stormwater collection system

Total Peak runoff to SWD1065691 = #REF! m^3/s = #REF! liter/min
(Site catchment and upstream area)
Check existing 600mm dia. Pipes (SWD1065691) by Colebrook-White Equation

$$V = -\sqrt{(8gDs)}\log\left(\frac{ks}{3.7D} + \frac{2.51v}{D\sqrt{(2gDs)}}\right)$$

where :

V	=			mean velocity (m/s)
g	=	9.81	m/s2	gravitational acceleration (m/s2)
D	=	0.6	m	internal pipe diameter (m)
ks	=	0.00015	m	hydraulic pipeline roughness (m)
v	=	1.14E-06	m2/s	kinematic viscosity of fluid (m2/s)
s	=	0.08		hydraulic gradient
Pipe area	=	0.283	m2	
10% reduction of flow area	=	0.254	m2	
Therefore, design V of pipe capacity	=	8.035	m/s	
Capacity of Existing 600mm dia pipe	=	0.8*V*A		(0.8 factor is adopted for sedimentation)
	=	1.82	m3/s	
	=	109046.1	lit/min	(1 m3 = 1000 lit and 1 min = 60s)
	>	45575	lit/min	OK

(Table 5, from DSD Sewerage Manual, concrete pipe)

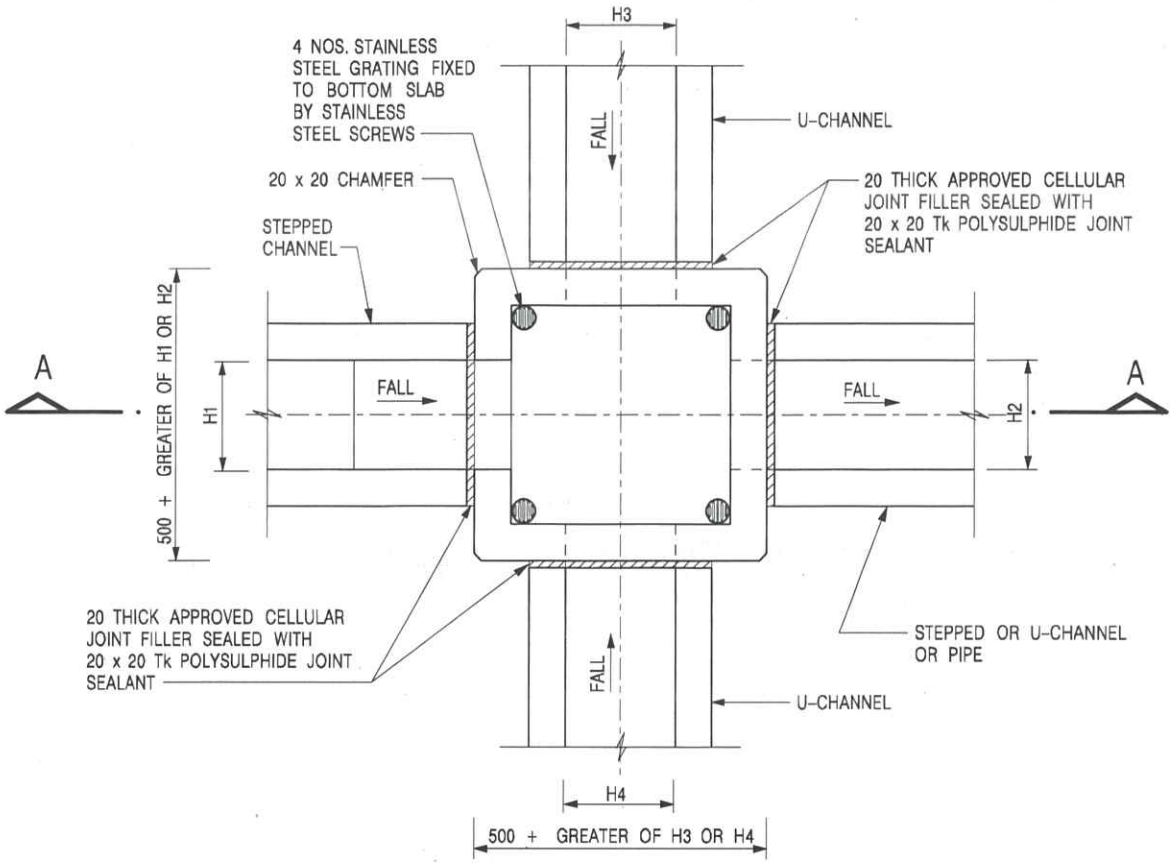

PLAN

NOMINAL SIZE (LARGEST OF H1, H2, H3 & H4)	B
300 – 600	150
675 – 900	175

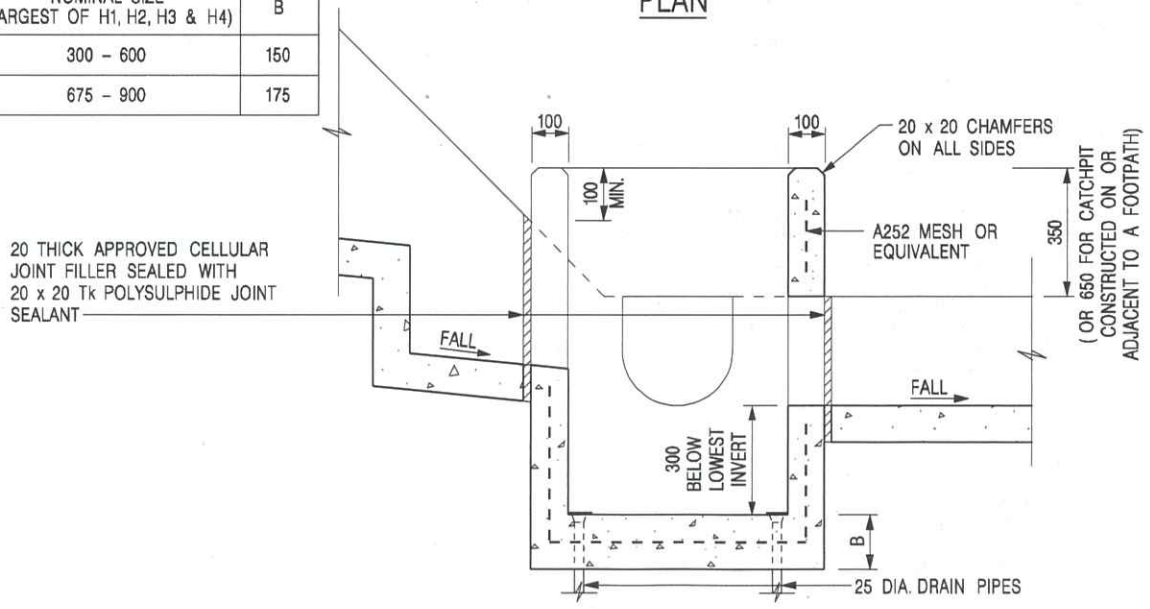

SECTION A – A

NOTES:

1. ALL DIMENSIONS ARE IN MILLIMETRES.
2. REFER TO SHEET 2 FOR OTHER NOTES.

REF.	REVISION	SIGNATURE	DATE
–	FORMER DRG. NO. C2406J.	Original Signed	03.2015

CATCHPIT WITH TRAP

(SHEET 1 OF 2)

CEDD CIVIL ENGINEERING AND DEVELOPMENT DEPARTMENT

SCALE 1 : 20

DATE JAN 1991

DRAWING NO. C2406 /1

卓越工程 建設香港

We Engineer Hong Kong's Development

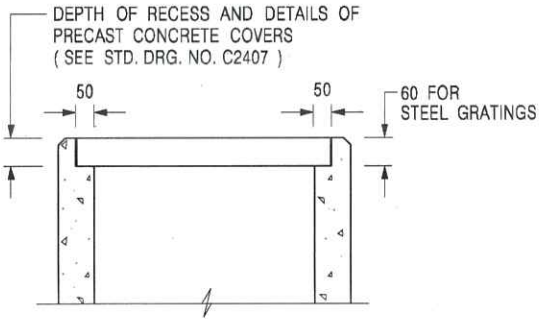

ALTERNATIVE TOP SECTION FOR PRECAST CONCRETE COVERS / GRATINGS

NOTES:

1. ALL DIMENSIONS ARE IN MILLIMETRES.
2. ALL CONCRETE SHALL BE GRADE 20 /20.
3. CONCRETE SURFACE FINISH SHALL BE CLASS U2 OR F2 AS APPROPRIATE.
4. FOR DETAILS OF JOINT, REFER TO STD. DRG. NO. C2413.
5. CONCRETE TO BE COLOURED AS SPECIFIED.
6. UNLESS REQUESTED BY THE MAINTENANCE PARTY AND AS DIRECTED BY THE ENGINEER, CATCHPIT WITH TRAP IS NORMALLY NOT PREFERRED DUE TO PONDING PROBLEM.
7. UPON THE REQUEST FROM MAINTENANCE PARTY, DRAIN PIPES AT CATCHPIT BASE CAN BE USED BUT THIS IS FOR CATCHPITS LOCATED AT SLOPE TOE ONLY AND AS DIRECTED BY THE ENGINEER.
8. FOR CATCHPITS CONSTRUCTED ON OR ADJACENT TO A FOOTPATH, STEEL GRATINGS (SEE DETAIL 'A' ON STD. DRG. NO. C2405) OR CONCRETE COVERS (SEE STD. DRG. NO. C2407) SHALL BE PROVIDED AS DIRECTED BY THE ENGINEER.
9. IF INSTRUCTED BY THE ENGINEER, HANDRAILING (SEE DETAIL 'G' ON STD. DRG. NO. C2405; EXCEPT ON THE UPSLOPE SIDE) IN LIEU OF STEEL GRATINGS OR CONCRETE COVERS CAN BE ACCEPTED AS AN ALTERNATIVE SAFETY MEASURE FOR CATCHPITS NOT ON A FOOTPATH NOR ADJACENT TO IT. TOP OF THE HANDRAILING SHALL BE 1 000 mm MIN. MEASURED FROM THE ADJACENT GROUND LEVEL.
10. MINIMUM INTERNAL CATCHPIT WIDTH SHALL BE 1 000 mm FOR CATCHPITS WITH A HEIGHT EXCEEDING 1 000 mm MEASURED FROM THE INVERT LEVEL TO THE ADJACENT GROUND LEVEL. AND, STEP IRONS (SEE DSD STD. DRG. NO. DS1043) AT 300 c/c STAGGERED SHALL BE PROVIDED. THICKNESS OF CATCHPIT WALL FOR INSTALLATION OF STEP IRONS SHALL BE INCREASED TO 150 mm.
11. FOR RETROFITTING AN EXISTING CATCHPIT WITH STEEL GRATING, SEE DETAIL 'F' ON STD. DRG. NO. C2405.
12. SUBJECT TO THE APPROVAL OF THE ENGINEER, OTHER MATERIALS CAN ALSO BE USED AS COVERS / GRATINGS.

REF.	REVISION	SIGNATURE	DATE
–	FORMER DRG. NO. C2406J.	Original Signed	03.2015

CATCHPIT WITH TRAP (SHEET 2 OF 2)

CEDD CIVIL ENGINEERING AND DEVELOPMENT DEPARTMENT

SCALE 1 : 20

DATE JAN 1991

DRAWING NO. C2406 /2

卓越工程 建設香港

We Engineer Hong Kong's Development

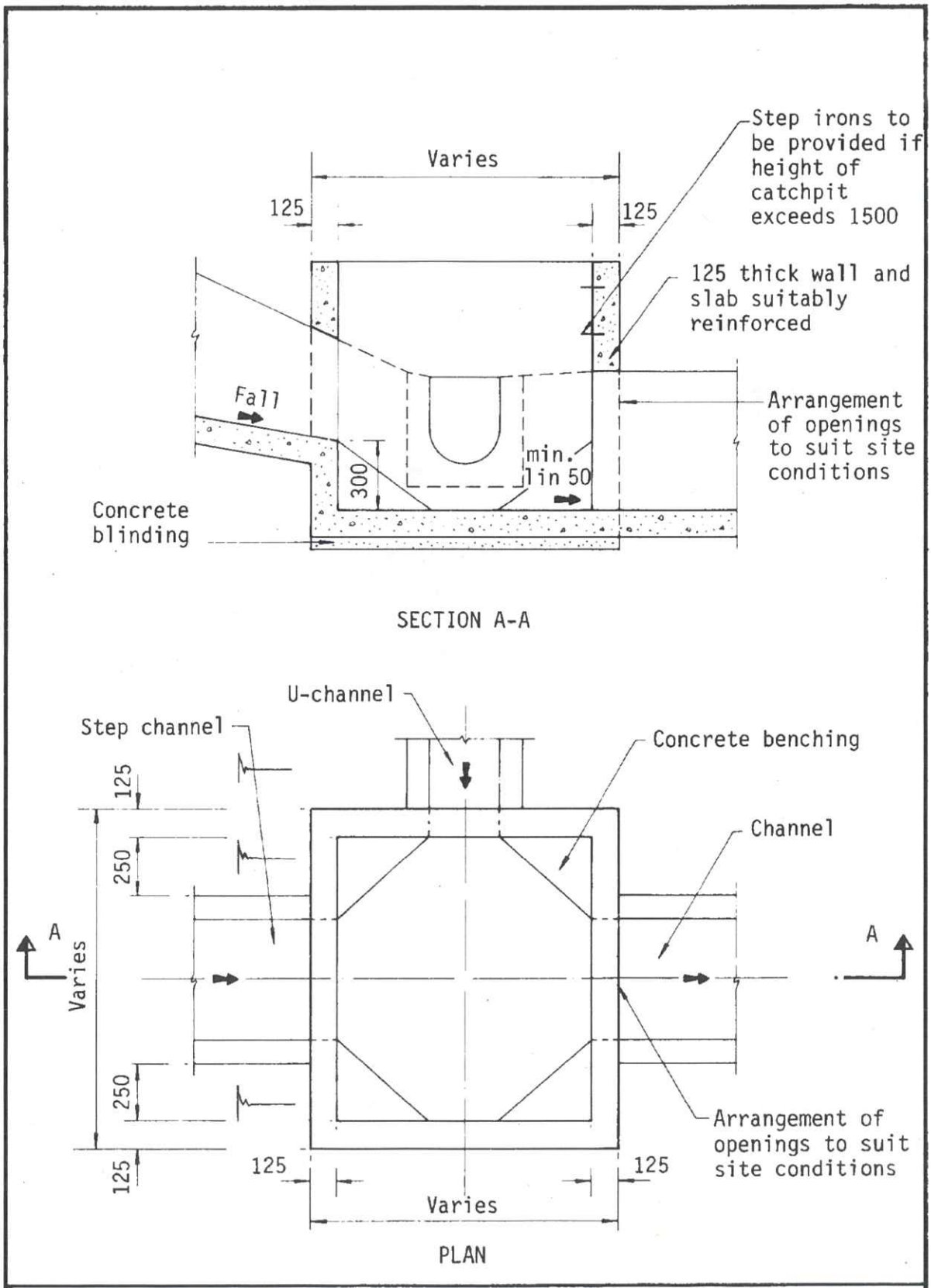

Note : All dimensions in millimetres

Figure 8.10 - Typical Details of Catchpits

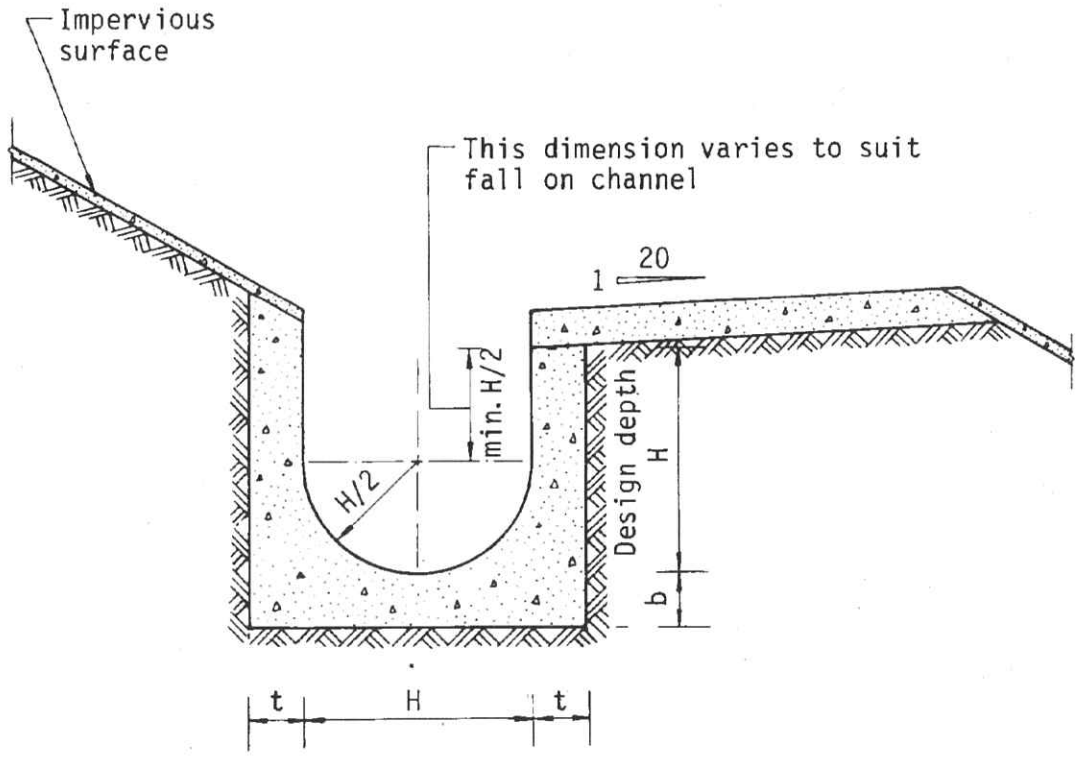

Dimensions of U - channel		
Nominal size of channel H (mm)	Thickness t (mm)	Thickness b (mm)
225 to 600	150	150
675 to 1200	175	225

Figure 8.11 - Typical U-channel Details

寄件者:	Louis Tse [redacted]
寄件日期:	2025年03月18日星期二 17:00
收件者:	tpbpd/PLAND
副本:	Andrea Wing Yin YAN/PLAND; Jet Sze Jet CHEUNG/PLAND; Bon Tang; Matthew Ng; Christian Chim; Danny Ng; Grace Wong; Kevin Lam
主旨:	[FI] S.16 Application No. A/YL-KTN/1049 - FI to address departmental comments
附件:	FI4 for A_YL-KTN_1049 (20250318).pdf
類別:	Internet Email

Dear Sir,

Attached herewith the further information to address departmental comments of the subject application.

Should you require more information, please do not hesitate to contact me. Thank you for your kind attention.

Kind Regards,

Louis TSE | Town Planner
R-riches Group (HK) Limited

[redacted]

R-Riches
Property Consultants Ltd.

盈卓物業
顧問有限公司

Our Ref. : DD107 Lot 1750A4 RP & VL
Your Ref. : TPB/A/YL-KTN/1049

The Secretary,
Town Planning Board,
15/F, North Point Government Offices,
333 Java Road,
North Point, Hong Kong

By Email

18 March 2025

Dear Sir,

4th Further Information

Temporary Place of Recreation, Sports or Culture (Hobby Farm, Fishing and Prawning Ground and Barbecue Site), Shop and Services and Holiday Camp with Ancillary Facilities for a Period of 3 Years and Associated Filling of Land in "Agriculture" Zone, Various Lots in D.D. 107, Kam Tin, Yuen Long, New Territories

(S.16 Planning Application No. A/YL-KTN/1049)

We are writing to submit further information to address departmental comments on the subject application (**Appendix I**).

Should you require more information regarding the application, please contact our Mr. Danny NG at [redacted] or the undersigned at your convenience. Thank you for your kind attention.

Yours faithfully,

For and on behalf of
R-riches Property Consultants Limited

Louis TSE
Town Planner

cc DPO/FSYLE, PlanD (Attn.: Ms. Andrea YAN email: awyyan@pland.gov.hk)
(Attn.: Mr. Jet CHEUNG email: jsjcheung@pland.gov.hk)

[redacted]

Responses-to-Comments

Temporary Place of Recreation, Sports or Culture (Hobby Farm, Fishing and Prawning Ground and Barbecue Site), Shop and Services and Holiday Camp with Ancillary Facilities for a Period of 3 Years and Associated Filling of Land in "Agriculture" Zone, Various Lots in D.D. 107, Kam Tin, Yuen Long, New Territories

(Application No. A/YL-KTN/1049)

(i) A RtoC Table:

Departmental Comments		Applicant's Responses
1. Comments of the Chief Engineer/Mainland North, Drainage Services Department (CE/MN, DSD) (Contact Person: Mr. Terence TANG; Tel.: 2300 1257)		
(a)	There is printing error in the calculation. Please revise.	It is revised accordingly. Please refer to the revised drainage proposal for details (**Annex I**).
(b)	The proposed u-channel size shown in cross sections does not tally with drainage plan.	U-channel size shown in cross sections is revised accordingly.
(c)	GEO TGN No. 43 - Please clarify why 300U is highlighted. Please remove to avoid confusion.	It is removed.
(d)	Calculation - rainfall intensity - Please advise why North District Area is adopted for storm constants. Please review the whole design calculations and size of drains.	Table 3a is adopted and correspondingly size of drains is revised and updated.
(e)	Checking for 600mm dia. pipe - Please review the rainfall intensity and SDM Corrigendum Nos. 1/2022 and 1/2024 should be considered. The rainfall intensity should not be identical with the one for application site as time of concentration is different. The outlet discharging pipe appears to be undersized. Please review and refer to our comment no. 6 below.	It is revised accordingly.
(f)	For recommended drain sizes, please make reference to the latest Technical Note No. 1 - Technical Note to prepare a Drainage Submission issued by DSD for more details in preparing the drainage proposal.	Noted.

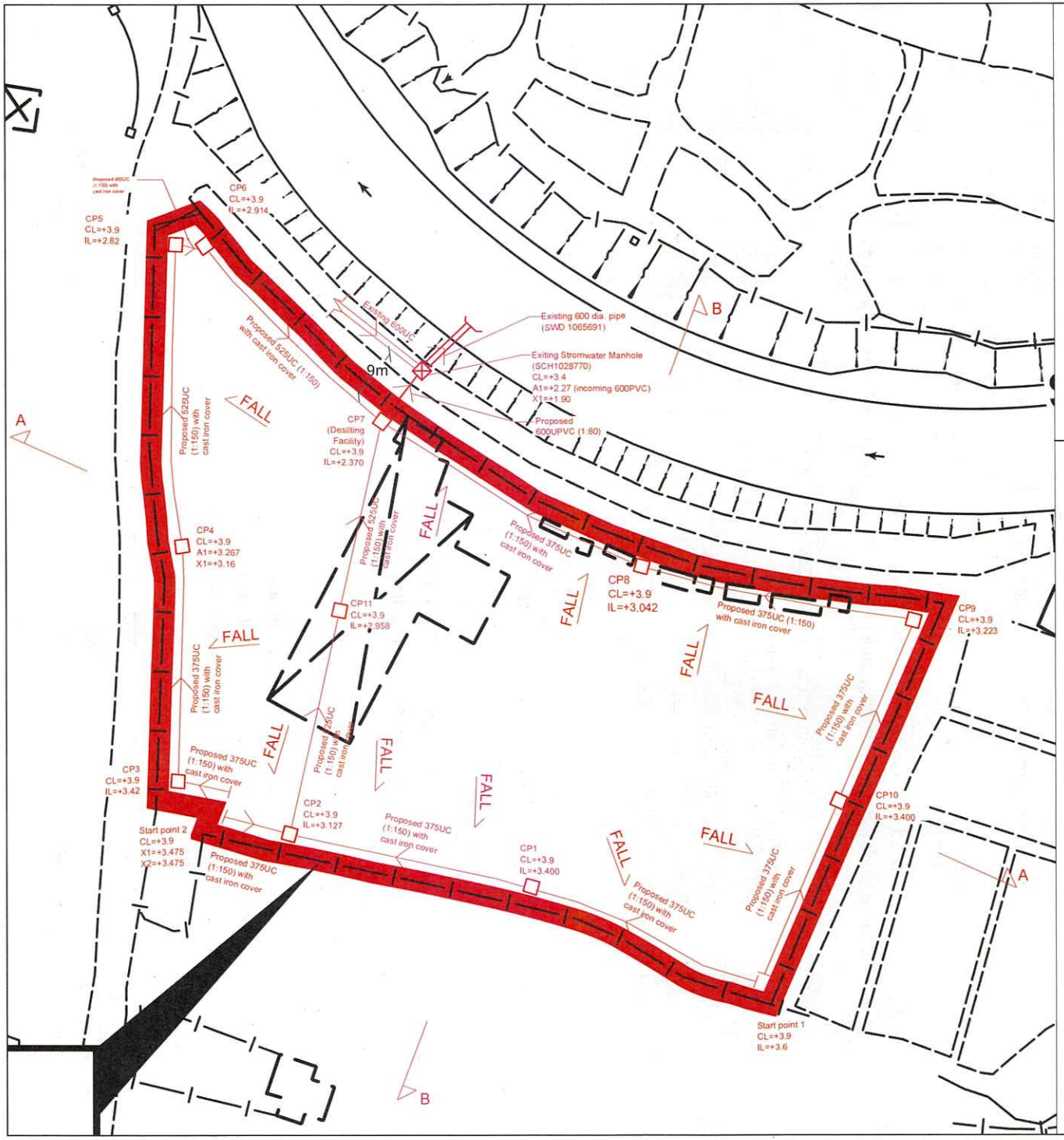

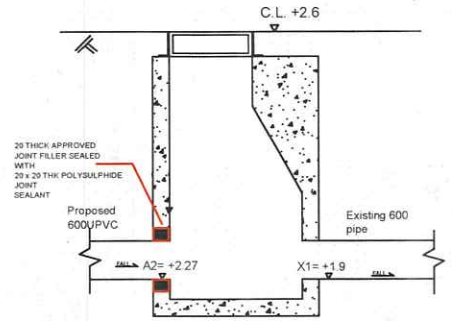

Connection Details of Existing Stormwater Manhole SCH1028769
(For Typical Existing Stormwater Manhole)

Note:

1. Catchpit (CP7) with desilting facility shall follow CEDD standard drawing No. C2406I.

2. Catchpit and UC follows Typical Details of Geotechnical Manual for Slope Fig.8.10 and Fig.8.11 respectively.

3. All UCs are covered by cast iron

4. The inverted level of the connection point shall be verified on site prior the commencement of work

Legend:

- Proposed 300UC/375UC/450UC(1:150) with cast iron cover/ 600PVC pipe (1:80)
- Proposed Catchpit
- Existing Stormwater Manhole

Company:

恒協工程有限公司
Handship Engineering Company Limited

Project:

Proposed Temporary Place of Recreation, Sports or Culture (Hobby Farm) for a Period of 5 Years at Lots 1750A4 RP (Part), 1750A5 RP and 1750A6 RP (Part) in D.D. 107, Fung Kat Heung, Kam Tin, Yuen Long

OZP:
Application No.
A/YL-KTN/1049

Zoning:
Agriculture

Title:

Drainage Proposal-Layout

Dwg No: Fig.1

File: DD107 Lot1750

Date: 20-2-2025

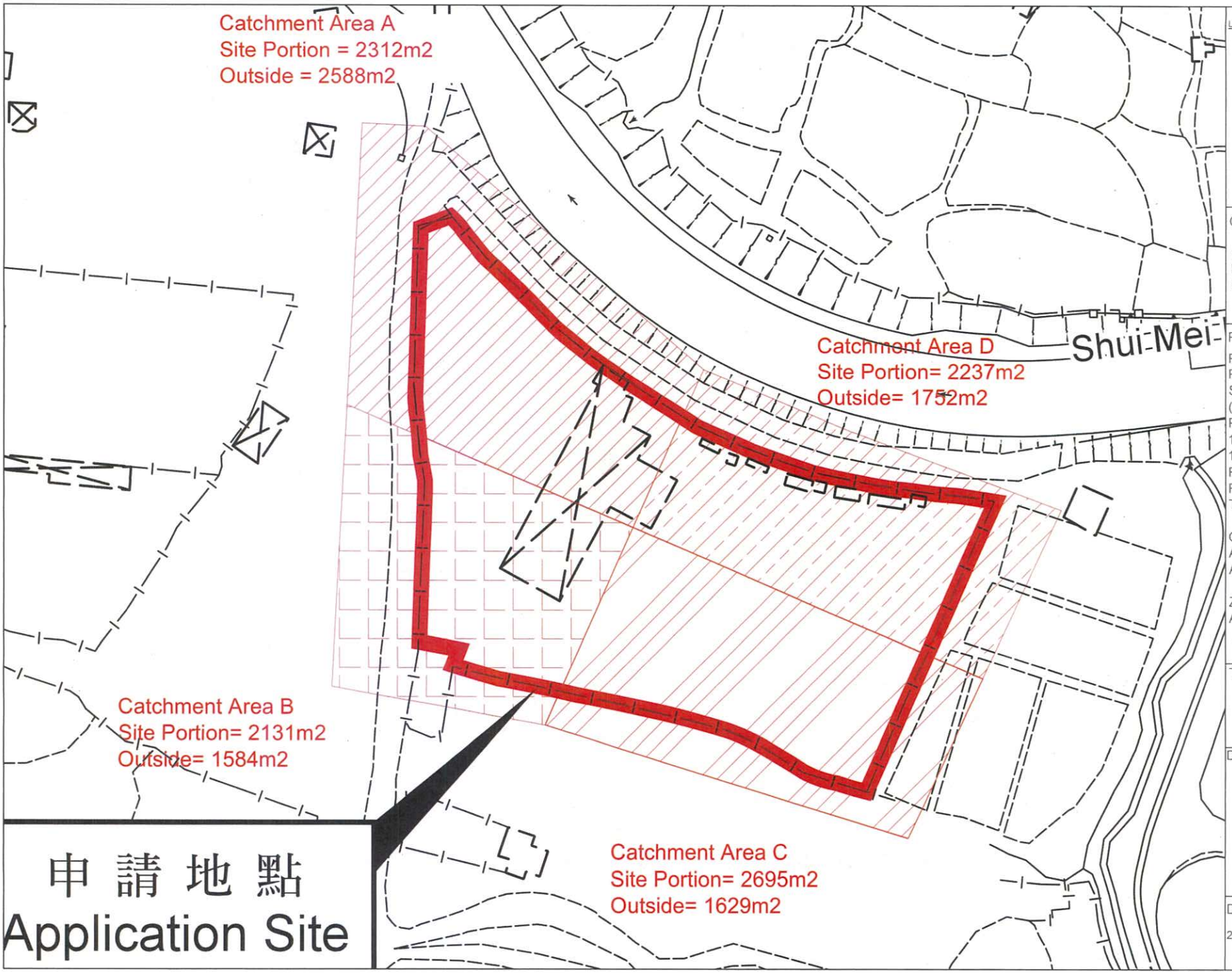

Legend:

- Proposed 300UC/375UC/450UC(1:150) with cast iron cover/ 600PVC pipe (1:80)
- Proposed Catchpit
- Existing Stormwater Manhole

Company:

恆協工程有限公司
Handship Engineering Company Limited

Project:

Proposed Temporary Place of Recreation, Sports or Culture (Hobby Farm) for a Period of 5 Years at Lots 1750A4 RP (Part), 1750A5 RP and 1750A6 RP (Part) in D.D. 107, Fung Kat Heung, Kam Tin, Yuen Long

OZP:
Application No. A/YL-KTN/1049

Zoning:
Agriculture

Title:

Catchment Area

Dwg No: Fig.2

File: DD107 Lot1750

Date: 20-2-2025

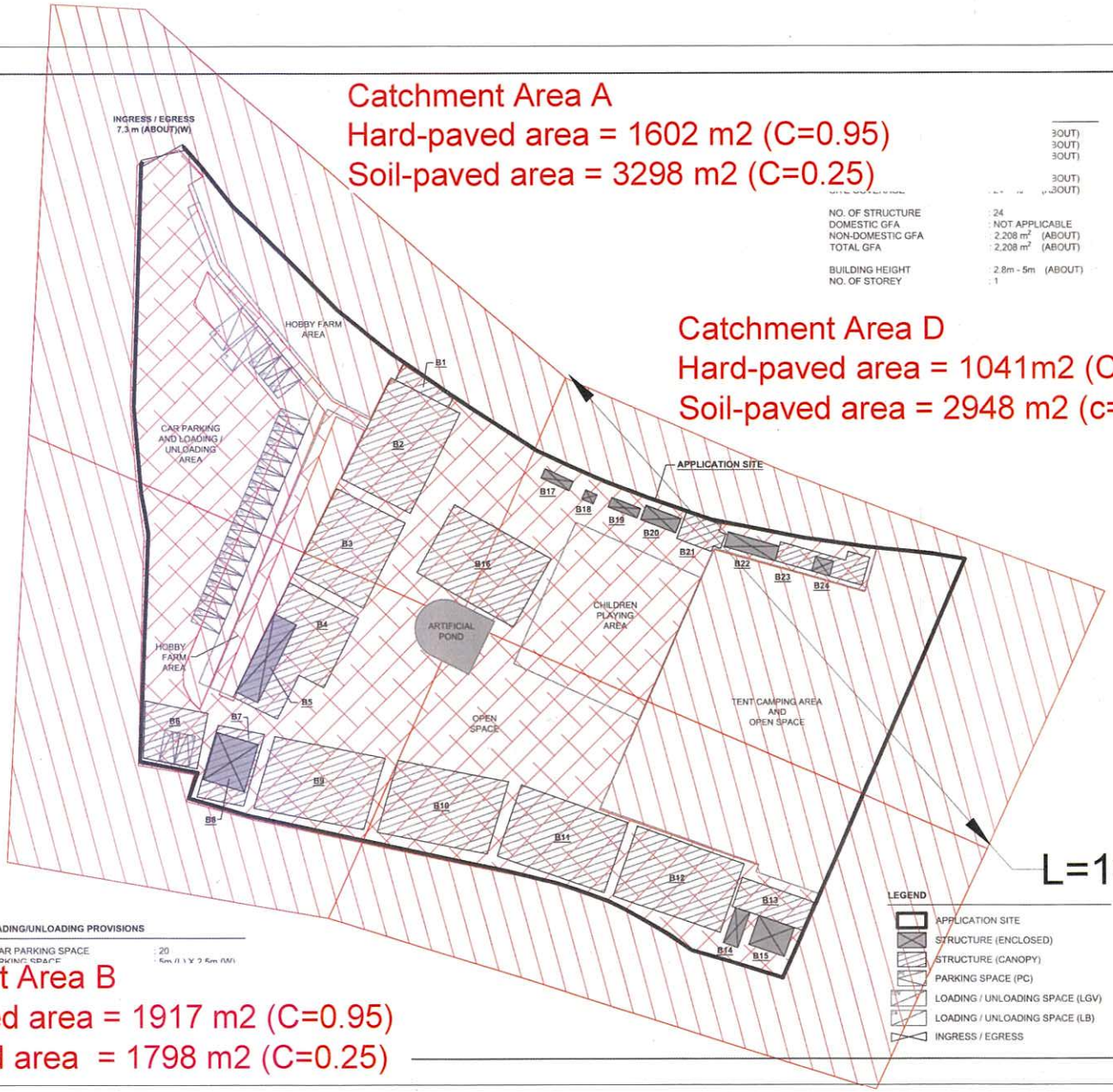

Legend:

- Proposed 300UC/375UC/450UC(1:150) with cast iron cover/ 600PVC pipe (1:80)
- Proposed Catchpit
- Existing Stormwater Manhole

Company:

恆協工程有限公司
Handship Engineering Company Limited

Project:

Proposed Temporary Place of Recreation, Sports or Culture (Hobby Farm) for a Period of 5 Years at Lots 1750A4 RP (Part), 1750A5 RP and 1750A6 RP (Part) in D.D. 107, Fung Kat Heung, Kam Tin, Yuen Long

OZP:
Application No. A/YL-KTN/1049

Zoning:
Agriculture

Title:

Catchment Area

Dwg No:

Fig.3

File:

DD107
Lot1750

Date:

20-2-2025

Hard-paved Area (C=0.95)

Soil-paved Area (C=0.25)

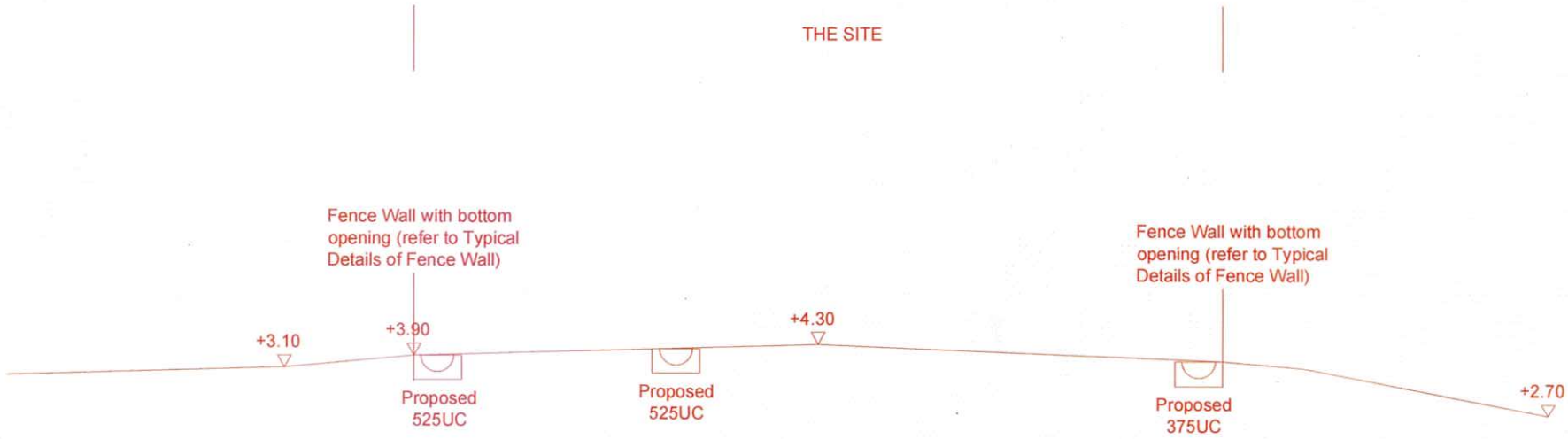

SECTION A-A

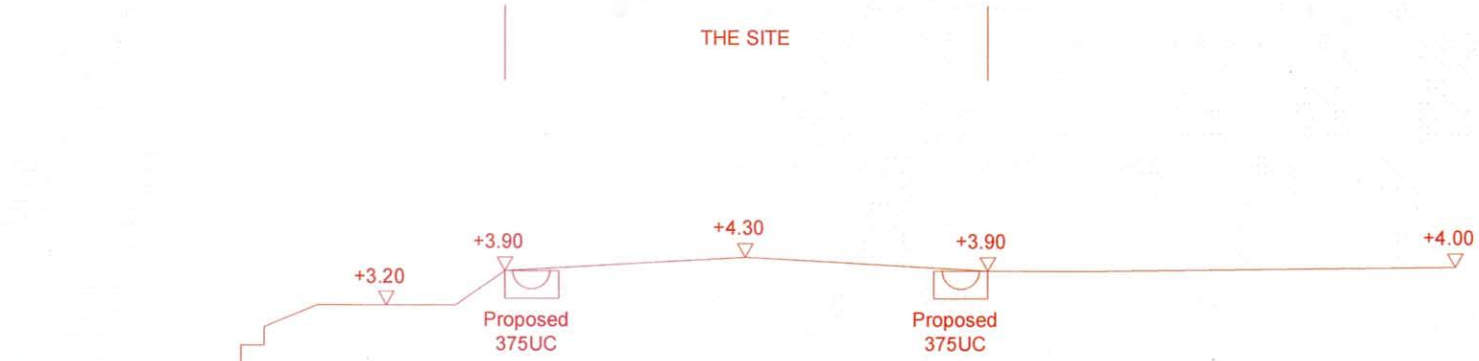

SECTION B-B

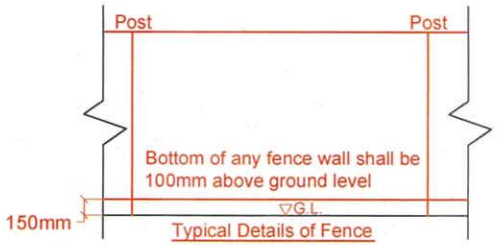

Typical Details of Fence Wall Bottom Opening

Legend:

- Proposed 300UC/375UC/450UC(1:150) with cast iron cover/ 600PVC pipe (1:80)
- Proposed Catchpit
- Existing Stormwater Manhole

Company:

恆協工程有限公司
Handship Engineering Company Limited

Project:

Proposed Temporary Place of Recreation, Sports or Culture (Hobby Farm) for a Period of 5 Years at Lots 1750A4 RP (Part), 1750A5 RP and 1750A6 RP (Part) in D.D. 107, Fung Kat Heung, Kam Tin, Yuen Long

OZP:
Application No. A/YL-KTN/1049

Zoning:
Agriculture

Title:

Section

Dwg No:

Fig.4

File:

DD107
Lot1750

Date:

20-2-2025

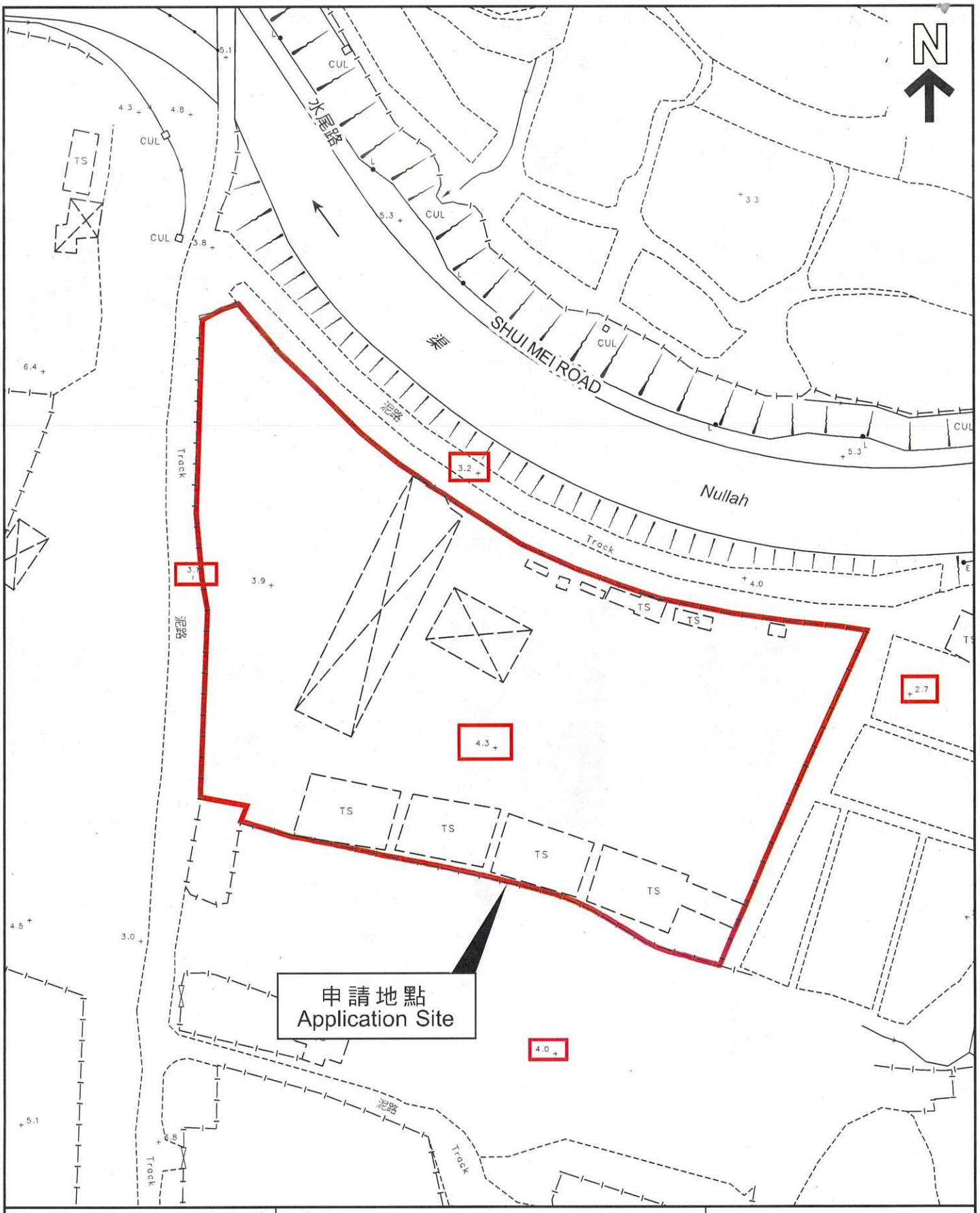

本摘要圖於2024年9月10日擬備，
所根據的資料為測量圖編號
6-NE-7A
EXTRACT PLAN PREPARED ON 10.9.2024
BASED ON SURVEY SHEET No.
6-NE-7A

平面圖 SITE PLAN

申請地點界線只作識別用
APPLICATION SITE BOUNDARY
FOR IDENTIFICATION PURPOSE ONLY

參考編號
REFERENCE No.
A/YL-KTN/1049

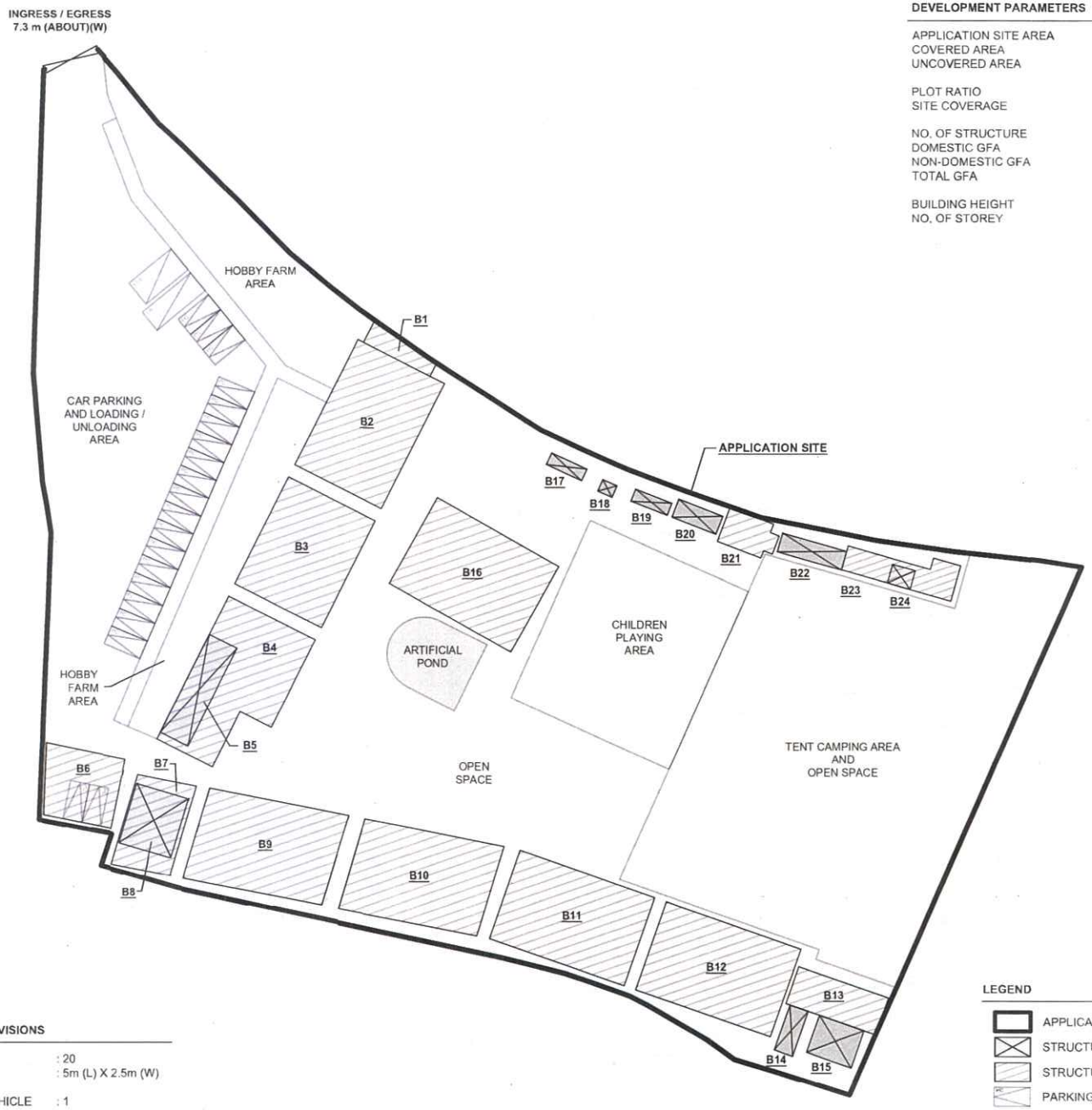

DEVELOPMENT PARAMETERS

APPLICATION SITE AREA	: 9,375 m^2	(ABOUT)
COVERED AREA	: 2,208 m^2	(ABOUT)
UNCOVERED AREA	: 7,167 m^2	(ABOUT)
PLOT RATIO	: 0.24	(ABOUT)
SITE COVERAGE	: 24 %	(ABOUT)
NO. OF STRUCTURE	: 24	
DOMESTIC GFA	: NOT APPLICABLE	
NON-DOMESTIC GFA	: 2,208 m^2	(ABOUT)
TOTAL GFA	: 2,208 m^2	(ABOUT)
BUILDING HEIGHT	: 2.8m - 5m	(ABOUT)
NO. OF STOREY	: 1	

PARKING AND LOADING/UNLOADING PROVISIONS

NO. OF PRIVATE CAR PARKING SPACE	: 20
DIMENSION OF PARKING SPACE	: 5m (L) X 2.5m (W)
NO. OF L/UL SPACE FOR LIGHT GOODS VEHICLE	: 1
DIMENSION OF L/UL SPACE	: 7m (L) X 3.5m (W)
NO. OF L/UL SPACE FOR LIGHT BUS	: 1
DIMENSION OF L/UL SPACE	: 8m (L) X 3m (W)

LEGEND

- APPLICATION SITE
- STRUCTURE (ENCLOSED)
- STRUCTURE (CANOPY)
- PARKING SPACE (PC)
- LOADING / UNLOADING SPACE (LGV)
- LOADING / UNLOADING SPACE (LB)
- INGRESS / EGRESS

NORTH
W E
S

PLANNING CONSULTANT

R-Riches Property Consultants Ltd.

PROJECT

TEMPORARY PLACE OF RECREATION, SPORTS OR CULTURE (HOBBY FARM, FISHING AND PRAWNING GROUND), BARBECUE SITE, HOLIDAY CAMP AND SHOP AND SERVICES WITH ANCILLARY FACILITIES FOR A PERIOD OF 3 YEARS AND ASSOCIATED FILLING OF LAND

SITE LOCATION

VARIOUS LOTS IN D.D. 107, KAM TIN, YUEN LONG, NEW TERRITORIES

SCALE	1 : 800 @ A4
DRAWN BY	MN
DATE	12.8.2024
REVISED BY	
DATE	
APPROVED BY	
DATE	
DWG. TITLE	LAYOUT PLAN
DWG NO	PLAN 4
VER.	001

Company: Handship Engineering Company Limited
Project: Proposed drainage at Lots 1750A4 RP (Part), 1750A5 RP and 1750A6 RP (Part) in D.D. 107, Fung Kat Heung, Kam Tin, Yuen Long
Date: 20/2/2025

Calculation for Design of Channels:

Catchment Area :						c		i		Peak runoff		
	m^2	km^2								liter/min	liter/min	m^3/s
A(Hard-paved)	1602	0.001602				0.95		259.4		6585	10153	0.1098
A(Soil-paved)	3298	0.003298				0.25		259.4		3568		0.0595
B(Hard-paved)	1917	0.001917				0.95		259.4		7880	9825	0.1313
B(Soil-paved)	1798	0.001798	X	0.278	X	0.25	X	259.4	=	1945		0.0324
C(Hard-paved)	2021	0.002021				0.95		259.4		8308	10799	0.1385
C(Soil-paved)	2303	0.002303				0.25		259.4		2491		0.0415
D(Hard-paved)	1041	0.001041				0.95		259.4		4279	7468	0.0713
D(Soil-paved)	2948	0.002948				0.25		259.4		3189		0.0532
Total= 16928									Total =	38246		0.6374

Peripheral Channel in Area A, Catchment Area A + B
Total Peak runoff = 19979 lit/min
Provide 525UC (1:150)

Peripheral Channel in Area B, Catchment Area B
Total Peak runoff = 9825 lit/min
Provide 375UC (1:150)

Peripheral Channel in Area C, Catchment Area C
Total Peak runoff = 10799 lit/min
Provide 375UC (1:150)

Peripheral Channel in Area D, Catchment Area C + D
Total Peak runoff = 18268 lit/min
Provide 450UC (1:150)

U-Channel From CP2 to CP7, Catchment Area B + C
Total Peak runoff = 20625 lit/min
Provide 525UC (1:150)

Pipe From CP7 to SCH1028770, Catchment Area A+ B + C + D
Total Peak runoff = 38246 lit/min

$t = 0.14465\ L/H^{0.2}A^{0.2}$
$= 0.14465*101/1^{0.2}*16928^{0.2}$
$= 5.518$ min

$i = 1.111*a/(t+b)^c$ **(50 yrs return period, Table 3a, Corrigendum 2024, SDM)**
$= 1.111*505.5/(5.518+3.29)^{0.2}$
$= 259.4$ mm/hr **(11.1% increase due to climate change, Corrigendum 2022, SDM)**

Colebrook-White Equation

$$V = -\sqrt{(8gDs)}\log\left(\frac{ks}{3.7D} + \frac{2.51\nu}{D\sqrt{(2gDs)}}\right)$$

where :

V	=			mean velocity (m/s)
g	=	9.81	m/s2	gravitational acceleration (m/s2)
D	=	0.6	m	internal pipe diameter (m)
ks	=	0.00015	m	hydraulic pipeline roughness (m)
v	=	1.14E-06	m2/s	kinematic viscosity of fluid (m2/s)
s	=	0.011111		hydraulic gradient (1:90)
Pipe area	=	0.283	m2	
10% reduction of flow area	=	0.254	m2	
Therefore, design V of pipe capacity	=	2.960	m/s	(Between 0.7 m/s and 3 m/s, OK)
Capacity of Proposed 600 mm dia pipe	=	0.8*V*A		(0.8 factor is adopted for sedimentation)
	=	0.670	m3/s	
	=	40178.33	lit/min	(1 m3 = 1000 lit and 1 min = 60s)
	>	38246	lit/min	OK

(Table 5, from DSD Sewerage Manual, concrete pipe)

Figure 1 - Chart for the rapid design of U-shaped and half-round channels up to 600 mm

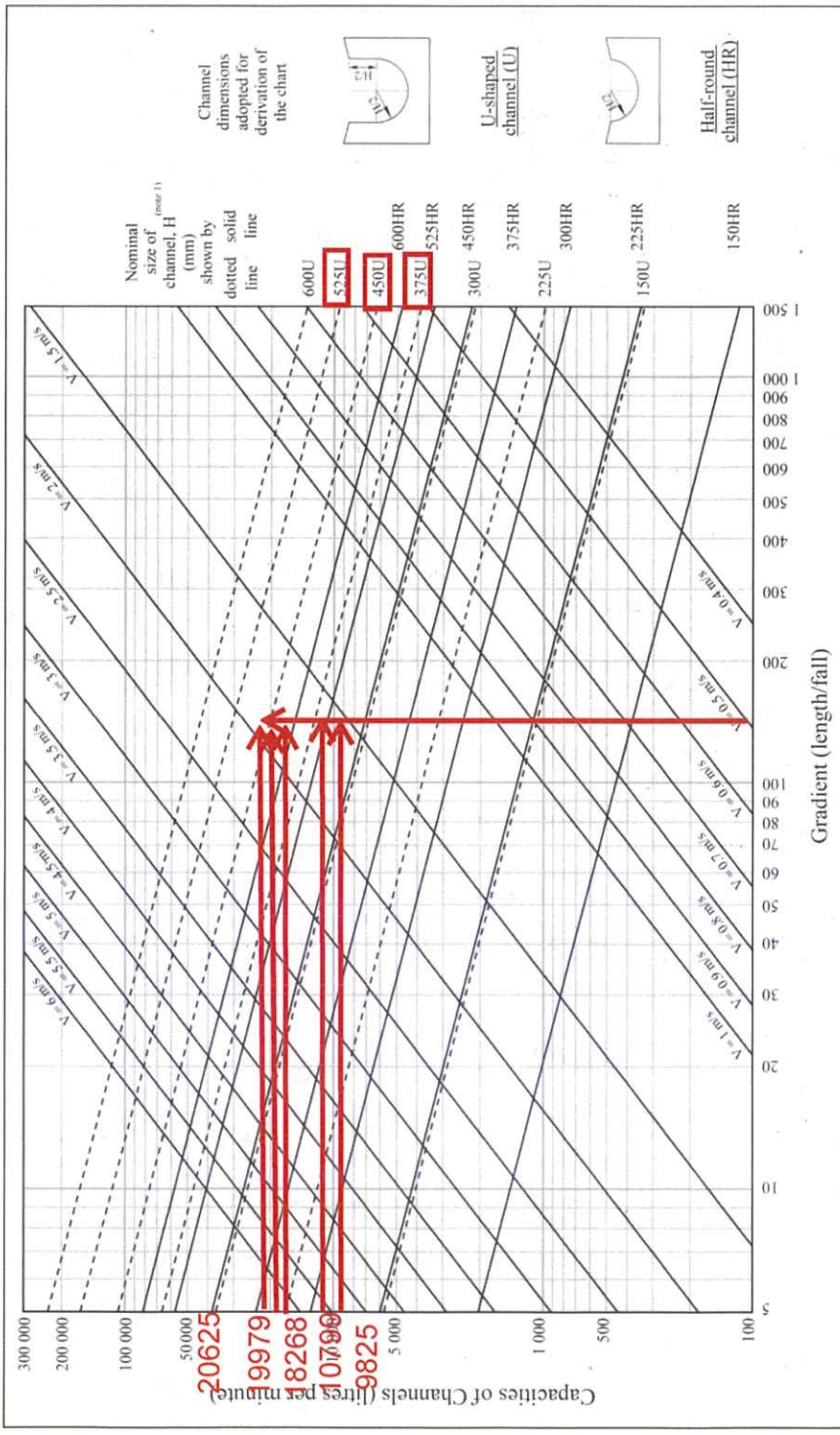

Note: (1) Refer to the latest CEDD Standard Drawings for the details of U-shaped (U) and half-round (HR) channels.

GEOINFO MAP
地理資訊地圖

前往地圖: https://www.map.gov.hk/gm/geo:22.4487,114.0579?z=2257

Total Catchment Area for Existing 600mm dia pipe (SWD1065691)

由「地理資訊地圖」網站提供: https://www.map.gov.hk

Company:	Handship Engineering Company Limited
Project:	Proposed drainage at Lots 1750A4 RP (Par t), 1750A5 RP and 1750A6 RP (Part) in D.D. 107, Fung Kat Heung, Kam Tin, Yuen Long
Date:	20/2/2025

Check Existing 600mm dia Pipe

Total Catchment Area	=	**27262**	**m2**						
Extra Catchment Area	=	27262	-	16928	=	10334	m2		
t	=	$0.14465\ L/H^{0.2}A^{0.1}$							
	=	$0.14465*180/1^{0.2}*27262^{0.1}$							
	=	5.261	min						
i	=	$1.111*a/(t+b)^{c}$							
	=	$1.111*505.5/(5.261+2.9)^{0.355}$							
	=	266.5	mm/hr						
Extra Runoff	=	0.278CiA							
	=	0.278	*	0.25	*	266.5	*	10334	/1000000
	=	0.191433	m3/s						
	=	11486	liter/min						
Total Q	=	11486	+	38246					
	=	49732	liter/min						

(50 yrs return period, Table 3a, Corrigendum 2024, SDM)

(11.1% increase due to climate change, Corrigendum 2022, SDM)

For gradient 1:100, existing 375UC has adequate capacity for stormwater collection system

Total Peak runoff to SWD1065691 = 49732 liter/min
(Site catchment and upstream area)
Check existing 600mm dia. Pipes (SWD1065691) by Colebrook-White Equation

$$V = -\sqrt{(8gDs)}\log\left(\frac{ks}{3.7D} + \frac{2.51v}{D\sqrt{(2gDs)}}\right)$$

where :

V	=			mean velocity (m/s)
g	=	9.81	m/s2	gravitational acceleration (m/s2)
D	=	0.6	m	internal pipe diameter (m)
ks	=	0.00015	m	hydraulic pipeline roughness (m)
v	=	1.14E-06	m2/s	kinematic viscosity of fluid (m2/s)
s	=	0.08		hydraulic gradient
Pipe area	=	0.283	m2	
10% reduction of flow area	=	0.254	m2	
Therefore, design V of pipe capacity	=	8.035	m/s	
Capacity of Existing 600mm dia pipe	=	0.8*V*A		(0.8 factor is adopted for sedimentation)
	=	1.82	m3/s	
	=	109046.1	lit/min	(1 m3 = 1000 lit and 1 min = 60s)
	>	49732	lit/min	OK

(Table 5, from DSD Sewerage Manual, concrete pipe)

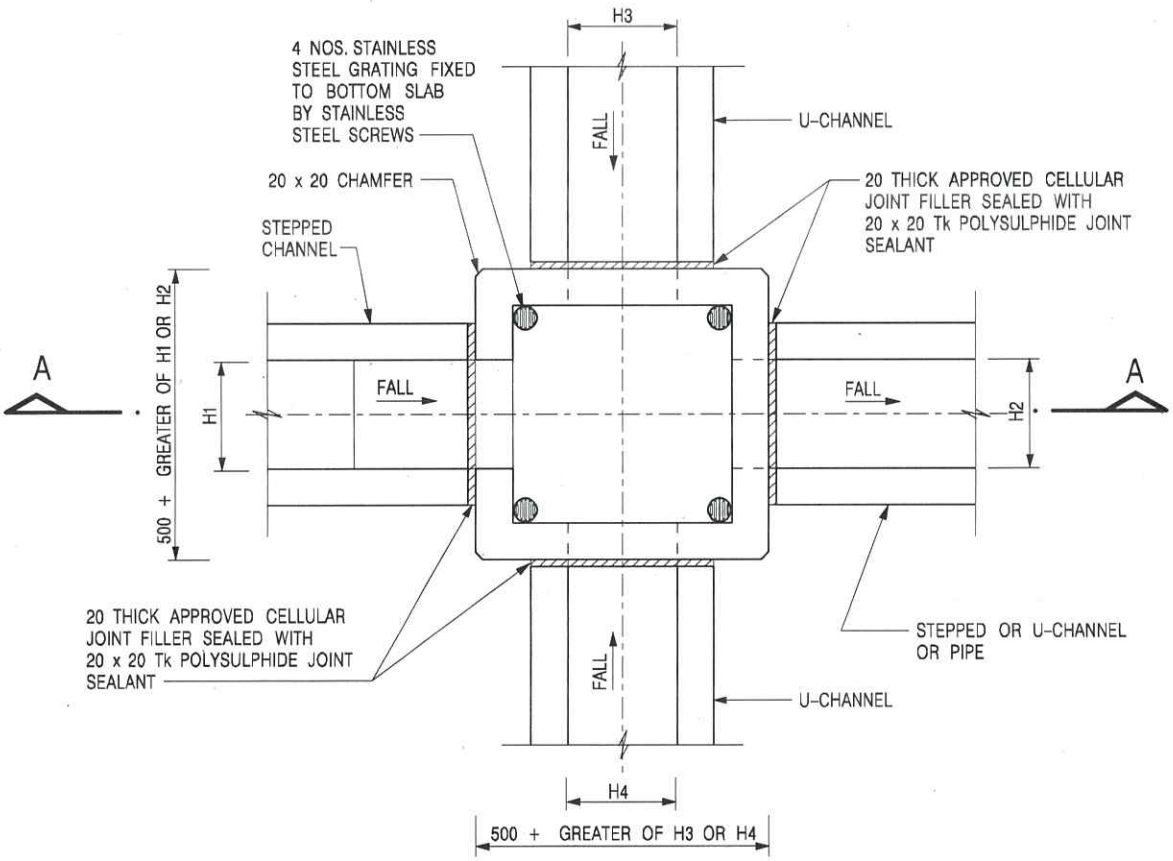

PLAN

NOMINAL SIZE (LARGEST OF H1, H2, H3 & H4)	B
300 – 600	150
675 – 900	175

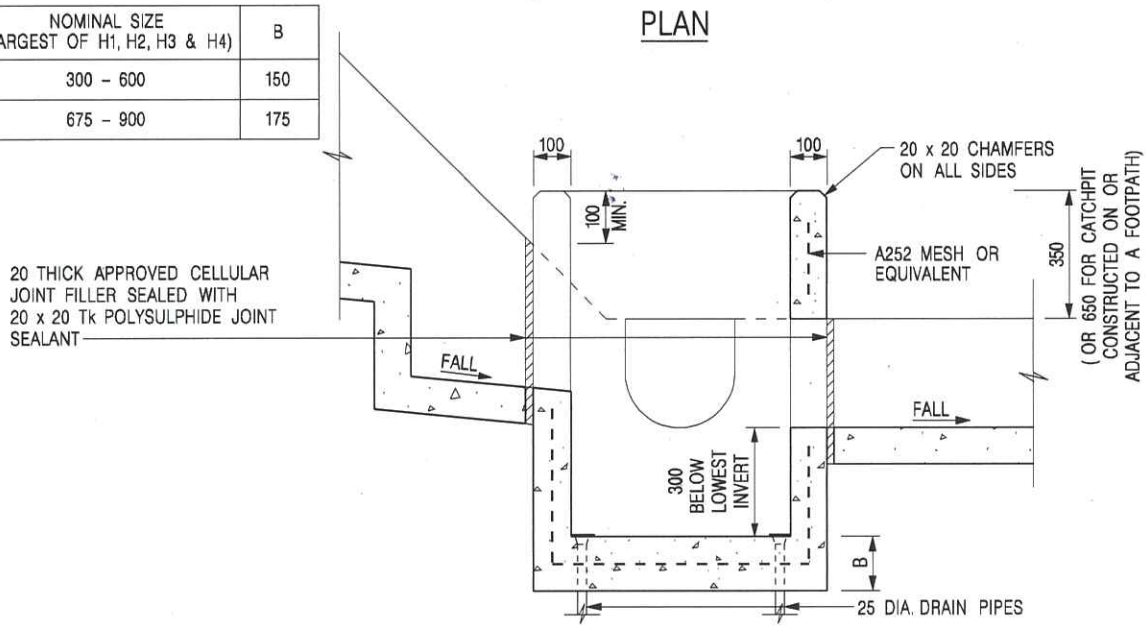

SECTION A – A

NOTES:

1. ALL DIMENSIONS ARE IN MILLIMETRES.
2. REFER TO SHEET 2 FOR OTHER NOTES.

REF.	REVISION	SIGNATURE	DATE
–	FORMER DRG. NO. C2406J.	Original Signed	03.2015

CATCHPIT WITH TRAP

(SHEET 1 OF 2)

CEDD CIVIL ENGINEERING AND DEVELOPMENT DEPARTMENT

SCALE 1 : 20

DATE JAN 1991

DRAWING NO. C2406 /1

卓越工程 建設香港

We Engineer Hong Kong's Development

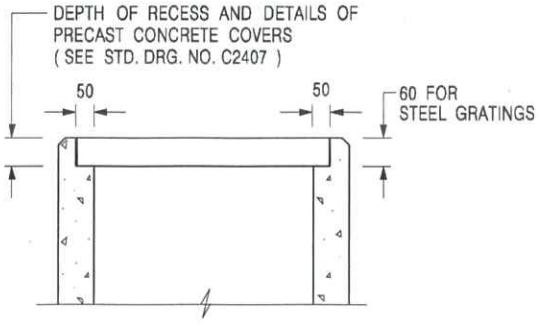

ALTERNATIVE TOP SECTION FOR PRECAST CONCRETE COVERS / GRATINGS

NOTES:

1. ALL DIMENSIONS ARE IN MILLIMETRES.
2. ALL CONCRETE SHALL BE GRADE 20 /20.
3. CONCRETE SURFACE FINISH SHALL BE CLASS U2 OR F2 AS APPROPRIATE.
4. FOR DETAILS OF JOINT, REFER TO STD. DRG. NO. C2413.
5. CONCRETE TO BE COLOURED AS SPECIFIED.
6. UNLESS REQUESTED BY THE MAINTENANCE PARTY AND AS DIRECTED BY THE ENGINEER, CATCHPIT WITH TRAP IS NORMALLY NOT PREFERRED DUE TO PONDING PROBLEM.
7. UPON THE REQUEST FROM MAINTENANCE PARTY, DRAIN PIPES AT CATCHPIT BASE CAN BE USED BUT THIS IS FOR CATCHPITS LOCATED AT SLOPE TOE ONLY AND AS DIRECTED BY THE ENGINEER.
8. FOR CATCHPITS CONSTRUCTED ON OR ADJACENT TO A FOOTPATH, STEEL GRATINGS (SEE DETAIL 'A' ON STD. DRG. NO. C2405) OR CONCRETE COVERS (SEE STD. DRG. NO. C2407) SHALL BE PROVIDED AS DIRECTED BY THE ENGINEER.
9. IF INSTRUCTED BY THE ENGINEER, HANDRAILING (SEE DETAIL 'G' ON STD. DRG. NO. C2405; EXCEPT ON THE UPSLOPE SIDE) IN LIEU OF STEEL GRATINGS OR CONCRETE COVERS CAN BE ACCEPTED AS AN ALTERNATIVE SAFETY MEASURE FOR CATCHPITS NOT ON A FOOTPATH NOR ADJACENT TO IT. TOP OF THE HANDRAILING SHALL BE 1 000 mm MIN. MEASURED FROM THE ADJACENT GROUND LEVEL.
10. MINIMUM INTERNAL CATCHPIT WIDTH SHALL BE 1 000 mm FOR CATCHPITS WITH A HEIGHT EXCEEDING 1 000 mm MEASURED FROM THE INVERT LEVEL TO THE ADJACENT GROUND LEVEL. AND, STEP IRONS (SEE DSD STD. DRG. NO. DS1043) AT 300 c/c STAGGERED SHALL BE PROVIDED. THICKNESS OF CATCHPIT WALL FOR INSTALLATION OF STEP IRONS SHALL BE INCREASED TO 150 mm.
11. FOR RETROFITTING AN EXISTING CATCHPIT WITH STEEL GRATING, SEE DETAIL 'F' ON STD. DRG. NO. C2405.
12. SUBJECT TO THE APPROVAL OF THE ENGINEER, OTHER MATERIALS CAN ALSO BE USED AS COVERS / GRATINGS.

REF.	REVISION	SIGNATURE	DATE
–	FORMER DRG. NO. C2406J.	Original Signed	03.2015

CATCHPIT WITH TRAP

(SHEET 2 OF 2)

CEDD CIVIL ENGINEERING AND DEVELOPMENT DEPARTMENT

SCALE 1 : 20

DATE JAN 1991

DRAWING NO. C2406 /2

卓越工程 建設香港

We Engineer Hong Kong's Development

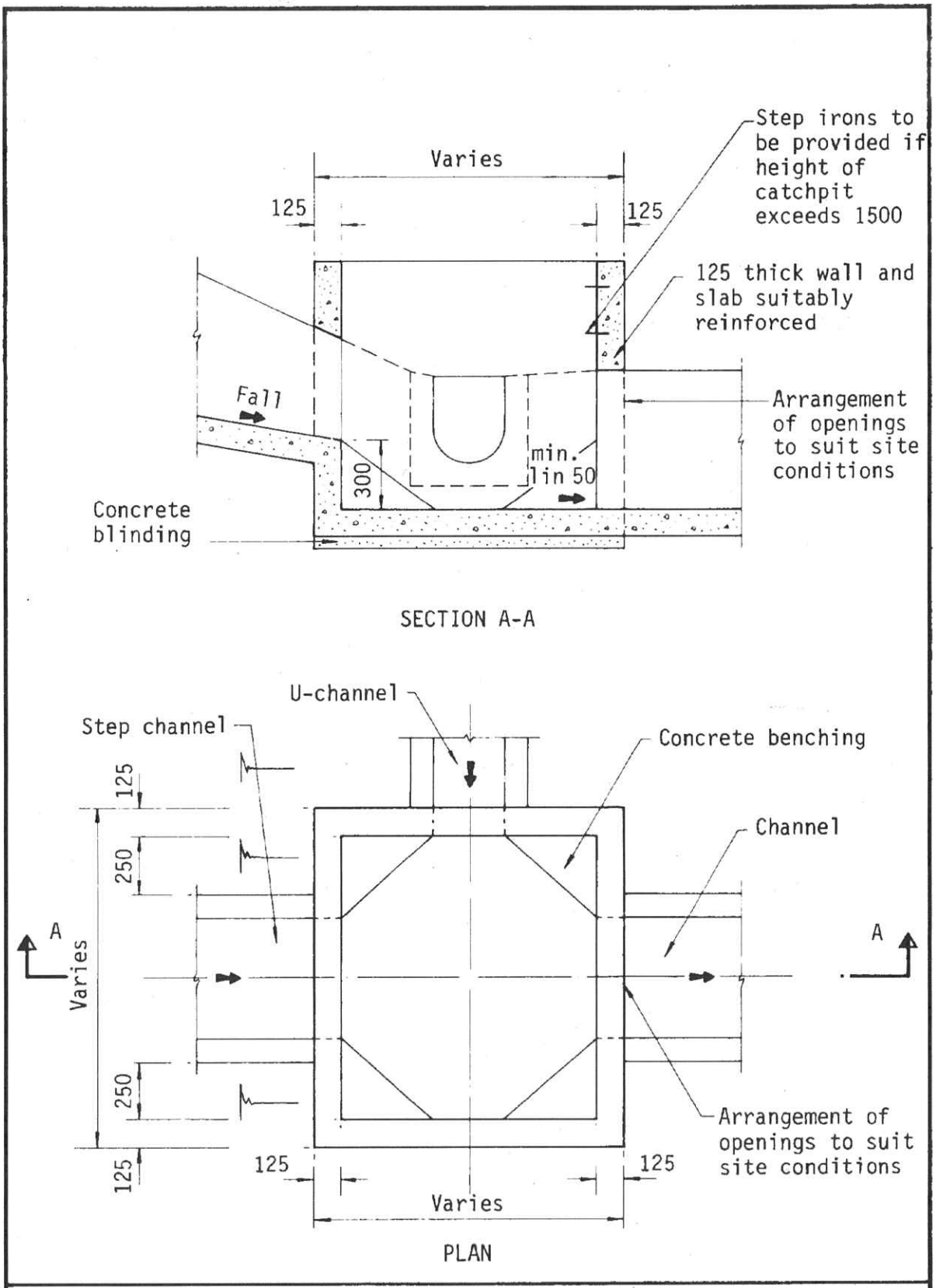

Note : All dimensions in millimetres

Figure 8.10 - Typical Details of Catchpits

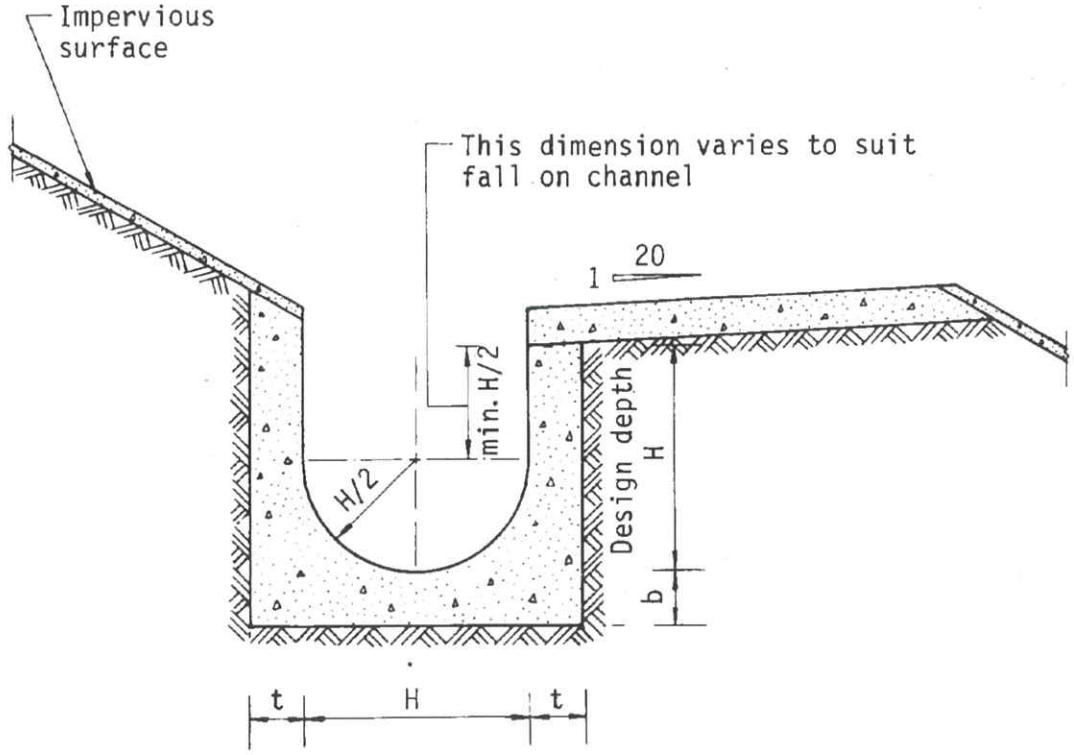

Dimensions of U - channel		
Nominal size of channel H (mm)	Thickness t (mm)	Thickness b (mm)
225 to 600	150	150
675 to 1200	175	225

Figure 8.11 - Typical U-channel Details

寄件者:	Matthew Ng [redacted]
寄件日期:	2025年04月17日星期四 15:21
收件者:	tpbpd/PLAND
副本:	Andrea Wing Yin YAN/PLAND; Jet Sze Jet CHEUNG/PLAND; Bon Tang; Louis Tse; Christian Chim; Danny Ng; Kevin Lam
主旨:	[FI5] S.16 Application No. A/YL-KTN/1049 - FI to address departmental comments
附件:	FI5 for A_YL-KTN_1049 (20250417).pdf
類別:	Internet Email

Dear Sir,

Attached please find the FI to address departmental comments of the subject application.

Should you require more information, please do not hesitate to contact me. Thank you for your kind attention.

Kind Regards,

Matthew NG | Director (Planning and Development)
R-riches Group (HK) Limited

R-riches Property Consultants Limited | R-riches Planning Limited | R-riches Construction Limited
[redacted]

R-Riches
Property Consultants Ltd.

盈卓物業
顧問有限公司

Our Ref. : DD107 Lot 1750A4 RP & VL
Your Ref. : TPB/A/YL-KTN/1049

The Secretary,
Town Planning Board,
15/F, North Point Government Offices,
333 Java Road,
North Point, Hong Kong

By Email

17 April 2025

Dear Sir,

5th Further Information

Temporary Place of Recreation, Sports or Culture (Hobby Farm, Fishing and Prawning Ground), Barbecue Site and Holiday Camp with Ancillary Facilities for a Period of 3 Years and Associated Filling of Land in "Agriculture" Zone, Various Lots in D.D. 107, Kam Tin, Yuen Long, N.T.

(S.16 Planning Application No. A/YL-KTN/1049)

We are writing to submit further information to address departmental comments of the subject application (**Appendix I**).

Should you require more information regarding the application, please contact our Mr. Louis TSE at (852) : or the undersigned at your convenience. Thank you for your kind attention.

Yours faithfully,

For and on behalf of
R-riches Property Consultants Limited

Matthew NG
Director (Planning and Development)

cc DPO/FSYLE, PlanD (Attn.: Ms. Andrea YAN email: awyyan@pland.gov.hk)
(Attn.: Mr. Jet CHEUNG email: jsjcheung@pland.gov.hk)

Responses-to-Comments

Temporary Place of Recreation, Sports or Culture, (Hobby Farm, Fishing and Prawning Ground), Barbecue Site and Holiday Camp with Ancillary Facilities for a Period of 3 Years and Associated Filling of Land in "Agriculture" Zone, Various Lots in D.D. 107, Kam Tin, Yuen Long, New Territories

(Application No. A/YL-KTN/1049)

(i) Clarifications for the proposed development:

- The proposed '*shop and services (fresh provision shop)*' located at structure B5 is intended to supply raw meat for visitors' barbecue activities at the application site (the Site), hence, it is considered as an ancillary use to support the overall operation of the proposed development.

- A set of revised application documents (including replacement pages of the application form and plans) are provided at **Annex I**.

(ii) A RtoC Table:

Departmental Comments		Applicant's Responses
1. Comments of the Chief Engineer/Mainland North, Drainage Services Department (Contact Person: Mr. Terence TANG; Tel.: 2300 1257)		
(a)	UC size (450UC) between CP5 and CP6 is smaller than its upstream size (525UC) which is not acceptable. Please clarify the difference of Fig 2 and Fig 3 catchment area	UC between CP5 and CP6 is revised to 525UC for your consideration please. The catchment area as shown on Fig 2 and Fig 3 are the same. Fig 2 is laid on the base map showing the area within and outside the Site, while Fig 3 is laid on the proposed layout showing the hard-paved and soiled areas (**Annex II**).

Annex I

Replacement Pages of the Application Document

(d)	Name and number of the related statutory plan(s) 有關法定圖則的名稱及編號	Approved Kam Tin North Outline Zoning Plan No. S/YL-KTN/11
(e)	Land use zone(s) involved 涉及的土地用途地帶	"Agriculture" ("AGR")
(f)	Current use(s) 現時用途	Place of Recreation, Sports or Culture (Hobby Farm and Prawning Ground), Barbecue Site and Holiday Camp with Ancillary Facilities (If there are any Government, institution or community facilities, please illustrate on plan and specify the use and gross floor area) (如有任何政府、機構或社區設施，請在圖則上顯示，並註明用途及總樓面面積)

4. "Current Land Owner" of Application Site 申請地點的「現行土地擁有人」

The applicant 申請人 –

☐ is the sole "current land owner"#& (please proceed to Part 6 and attach documentary proof of ownership).
是唯一的「現行土地擁有人」#& (請繼續填寫第 6 部分，並夾附業權證明文件)。

☐ is one of the "current land owners"# & (please attach documentary proof of ownership).
是其中一名「現行土地擁有人」#& (請夾附業權證明文件)。

☑ is not a "current land owner"#.
並不是「現行土地擁有人」#。

☐ The application site is entirely on Government land (please proceed to Part 6).
申請地點完全位於政府土地上（請繼續填寫第 6 部分）。

5. Statement on Owner's Consent/Notification 就土地擁有人的同意/通知土地擁有人的陳述

(a) According to the record(s) of the Land Registry as at ..... (DD/MM/YYYY), this application involves a total of ..... "current land owner(s) "#.
根據土地註冊處截至 ..... 年 ..... 月 ..... 日的記錄，這宗申請共牽涉 ..... 名「現行土地擁有人」#。

(b) The applicant 申請人 –

☐ has obtained consent(s) of ..... "current land owner(s)"#.
已取得 ..... 名「現行土地擁有人」#的同意。

Details of consent of "current land owner(s)" # obtained 取得「現行土地擁有人」#同意的詳情		
No. of 'Current Land Owner(s)' 「現行土地擁有人」數目	Lot number/address of premises as shown in the record of the Land Registry where consent(s) has/have been obtained 根據土地註冊處記錄已獲得同意的地段號碼／處所地址	Date of consent obtained (DD/MM/YYYY) 取得同意的日期 (日/月/年)

(Please use separate sheets if the space of any box above is insufficient. 如上列任何方格的空間不足，請另頁說明)

6. Type(s) of Application 申請類別

(A) Temporary Use/Development of Land and/or Building Not Exceeding 3 Years in Rural Areas or Regulated Areas
位於鄉郊地區或受規管地區土地上及/或建築物內進行為期不超過三年的臨時用途/發展
(For Renewal of Permission for Temporary Use or Development in Rural Areas or Regulated Areas, please proceed to Part (B))
(如屬位於鄉郊地區或受規管地區臨時用途/發展的規劃許可續期，請填寫(B)部分)

(a) Proposed use(s)/development 擬議用途/發展	Temporary Place of Recreation, Sports or Culture (Hobby Farm, Fishing and Prawning Ground), Barbecue Site and Holiday Camp with Ancillary Facilities for a Period of 3 Years and Associated Filling of Land (Please illustrate the details of the proposal on a layout plan) (請用平面圖說明擬議詳情)
(b) Effective period of permission applied for 申請的許可有效期	☑ year(s) 年 ..... 3 ..... ☐ month(s) 個月 .....

(c) Development Schedule 發展細節表

Proposed uncovered land area 擬議露天土地面積	7,167 sq.m ☑About 約
Proposed covered land area 擬議有上蓋土地面積	2,208 sq.m ☑About 約
Proposed number of buildings/structures 擬議建築物／構築物數目	24
Proposed domestic floor area 擬議住用樓面面積	N/A sq.m ☐About 約
Proposed non-domestic floor area 擬議非住用樓面面積	2,208 sq.m ☑About 約
Proposed gross floor area 擬議總樓面面積	2,208 sq.m ☑About 約

Proposed height and use(s) of different floors of buildings/structures (if applicable) 建築物/構築物的擬議高度及不同樓層的擬議用途 (如適用) (Please use separate sheets if the space below is insufficient) (如以下空間不足，請另頁說明)

Please refer to Plan 5.

Proposed number of car parking spaces by types 不同種類停車位的擬議數目

Private Car Parking Spaces 私家車車位	18
Motorcycle Parking Spaces 電單車車位	N/A
Light Goods Vehicle Parking Spaces 輕型貨車泊車位	N/A
Medium Goods Vehicle Parking Spaces 中型貨車泊車位	N/A
Heavy Goods Vehicle Parking Spaces 重型貨車泊車位	N/A
Others (Please Specify) 其他 (請列明)	

Proposed number of loading/unloading spaces 上落客貨車位的擬議數目

Taxi Spaces 的士車位	N/A
Coach Spaces 旅遊巴車位	N/A
Light Goods Vehicle Spaces 輕型貨車車位	1
Medium Goods Vehicle Spaces 中型貨車車位	N/A
Heavy Goods Vehicle Spaces 重型貨車車位	N/A
Others (Please Specify) 其他 (請列明)	Light Bus: 1

Gist of Application 申請摘要

(Please provide details in both English and Chinese as far as possible. This part will be circulated to relevant consultees, uploaded to the Town Planning Board's Website for browsing and free downloading by the public and available at the Planning Enquiry Counters of the Planning Department for general information.)
(請盡量以英文及中文填寫。此部分將會發送予相關諮詢人士、上載至城市規劃委員會網頁供公眾免費瀏覽及下載及於規劃署規劃資料查詢處供一般參閱。)

Application No. 申請編號	(For Official Use Only) (請勿填寫此欄)
Location/address 位置／地址	Lots 1750A4 RP (Part), 1750A5 RP (Part) and 1750A6 RP (Part) in D.D. 107, Kam Tin, Yuen Long, New Territories
Site area 地盤面積	9,375 sq. m 平方米 ☑ About 約 (includes Government land of 包括政府土地 N/A sq. m 平方米 ☐ About 約)
Plan 圖則	Approved Kam Tin North Outline Zoning Plan No. S/YL-KTN/11
Zoning 地帶	"Agriculture" ("AGR")
Type of Application 申請類別	☑ Temporary Use/Development in Rural Areas or Regulated Areas for a Period of 位於鄉郊地區或受規管地區的臨時用途/發展為期 ☑ Year(s) 年 3 ☐ Month(s) 月 _____ ☐ Renewal of Planning Approval for Temporary Use/Development in Rural Areas or Regulated Areas for a Period of 位於鄉郊地區或受規管地區臨時用途/發展的規劃許可續期為期 ☐ Year(s) 年 _____ ☐ Month(s) 月 _____
Applied use/ development 申請用途/發展	Temporary Place of Recreation, Sports or Culture (Hobby Farm, Fishing and Prawning Ground), Barbecue Site and Holiday Camp with Ancillary Facilities for a Period of 3 Years and Associated Filling of Land

Supplementary Statement

1) Background

1.1 The applicant seeks planning permission from the Town Planning Board (the Board) to use *Various Lots in D.D. 107, Kam Tin, Yuen Long, New Territories* (the Site) for '**Temporary Place of Recreation, Sports or Culture (Hobby Farm, Fishing and Prawning Ground), Barbecue Site and Holiday Camp with Ancillary Facilities for a Period of 3 Years and Associated Filling of Land**' (proposed development) (**Plan 1**).

1.2 Due to the limited number of venues for recreational activities in the rural area of New Territories, locals living in the New Territories often require travelling to the urban area of Hong Kong to participate the aforesaid activities. This undoubtedly causes inconvenience for the locals. In view of this, the applicant would like to continue to use the Site for the applied use to alleviate the pressing demand of such use, in order to better serve the nearby locals.

2) Planning Context

2.1 The Site currently falls within an area zoned as "Agriculture" ("AGR") on the Approved Kam Tin North Outline Zoning Plan (OZP) No.: S/YL-KTN/11 (**Plan 2**). According to the Notes of the OZP, the applied uses are not column 1 use within the "AGR" zone, which requires planning permission from the Board.

2.2 The proposed development with low-rise structures is considered not incompatible with the surrounding areas, which are dominated by vacant land, sites occupied by temporary structures for agricultural and recreational uses and open storage yards. Although the Site is zoned as "AGR", there is no active agricultural activity within the Site. Approval of the planning application on a temporary basis of 3 years would not frustrate the long-term planning intention of the "AGR" zone and would better utilize the precious land resources in the New Territories.

2.3 Furthermore, similar S.16 planning applications for '*place of recreation, sports or culture*', '*barbecue site*' and '*holiday camp*' uses were also approved by the Board within the same "AGR" zone, which the latest application (No. A/YL-KTN/859) was approved by the Board on a temporary basis for 3 years in 2022. Therefore, approval of the current application would not set an undesirable precedent within the "AGR" zone.

2.4 The Site is the subject of 3 previous S.16 planning applications, in which the latest planning application (No. A/YL-KTN/844) for *'place of recreation, sports or culture'*, *'hobby farm'*, *'prawning ground'*, *'barbecue site'* and *'holiday camp'* uses (that were submitted by the same applicant as the current application), was approved by the Board in 2022, therefore, approval of the current application is in line with the Board's previous decisions. When compared to the previous application (No. A/YL-KTN/844), the major development parameters and operation mode remain the same. The applicant has made effort to comply with approval conditions of the previous application, details are shown at **Table 1** below:

Table 1 – Details of Compliance with Approval Condition of the Previous Application

Approval Conditions of Application No. A/YL-KTN/844		Date of Compliance
(b)	The implementation of the accepted drainage proposal	Not complied with
(d)	The submission of a fire service installations (FSIs) proposal	10/5/2023
(e)	The implementation of the FSIs proposal	Not complied with

2.5 During the operation of the previous application, the applicant has implemented part of the accepted drainage and FSIs proposals. However, due to the reduced number of visitors at the Site, the applicant did not have sufficient funding to complete the remaining phase of the drainage facilities and FSIs, hence, the construction works were temporarily put on hold. In order to increase the revenue of the Site, the applicant intends to rearrange the layout of the Site (i.e. reduced the tent camping and hobby farm area to reduce overall maintenance costs) and to include a new ancillary *'shop and services (fresh provision shop)'* for barbecue activities. With the new source of revenue, the applicant intends to complete works for the remaining phase of drainage and FSIs during the planning approval period of the current application. In support of the application, the applicant has submitted the accepted drainage and FSIs proposals to minimize impact to the surrounding areas (**Appendices I** and **II**).

3) Development Proposal

3.1 The Site occupies an area of 9,375 m^2 (about) (**Plan 3**). The operation hours of the Site are from 09:00 to 22:00 daily, including public holidays (except for overnight camping activities). A total of 24 structures are proposed at the Site for rain shelter for barbecue activities, rain shelter for children playing area, rain shelter for prawning, rain shelter for fishing, rain shelter for parking space, activities rooms, rain shelters, shop and services, reception and storage of

tools, portable toilets and meter room with total GFA of 2,208 m^2 (**Plans 4** and **5**). Major development parameters are shown at **Table 2** below:

Table 2 - Major Development Parameters

Application Site Area	9,375 m^2 (about)
Covered Area	2,208m^2 (about)
Uncovered Area	7,167 m^2 (about)
Plot Ratio	0.24 (about)
Site Coverage	24% (about)
Number of Structure	24
Total GFA - *Domestic GFA* - *Non-Domestic GFA*	2,208m^2 (about) *Not applicable* 2,208m^2 (about)
Building Height	2.8 m – 5 m (about)
No. of Storey	1

3.2 It is estimated that 8 staff will work at the Site, which two staff will station at the Site overnight to handle potential complaints arising from the proposed development. It is estimated that the proposed development would be able to attract not more than 70 visitors per day. Visitor is required to make appointment in advance to access the Site, which could help to prevent excessive number of visitors and affect the public. Walk-in visitors will not be served.

3.3 Portion of the Site is reserved as lawn area for tent camping area and open space (1,921m^2), where various sports activities (i.e. playing football and badminton) and camping activities (i.e. about 20 tents with not more than 2 visitors per tent) are carried out. Furthermore, 661m^2 (about) is proposed as hobby farm for visitors to promote organic farming. As no eating place is provided in close vicinity of the Site, barbecue area (i.e. about 35 barbecue pits) will be provided at the Site for visitor to support the operation of the proposed development. Crops harvested from the hobby farming, fish and prawns from fishing and prawning, and raw meat from the proposed ancillary shop and services are the major food sources for barbecue activities at the Site. The existing structures B14 and B15 are available for visitors to conduct various types of recreational, sports or cultural activities, i.e. dancing, painting, drawing and yoga classes etc.

3.4 An area of 5,672 m^2 (about) have already been filled with concrete (i.e. about 4,042 m^2) and gravel (i.e. about 1,630 m^2) with existing site level ranges from +3.9mPD to +4.3mPD. (**Plan 6**). The hard-paved area is intended to facilitate a flat surface for site formation of structures, children playing area, parking and loading/unloading (L/UL) spaces and circulation area. Therefore, the associated filling of land area is considered necessary and has been kept to minimal for the operation of the proposed development. No further filling of land will be carried out at the Site at any time during the planning approval period.

3.5 The Site is accessible from Chi Ho Road via a local access (**Plan 1**). A total of 20 parking and L/UL spaces are provided at the Site for staff and visitors, details are shown at **Table 3** below:

Table 3– Parking and L/UL Provision of the Proposed Development

Type of Space	No. of Space
Private Car (PC) Parking Space for Staff - *2.5 m (W) x 5 m (L)*	4
PC Parking Space for Visitor - *2.5 m (W) x 5 m (L)*	16
L/UL Space for Light Goods Vehicle (LGV) - *3.5 m (W) x 7 m (L)*	1
L/UL Space for Light Bus (LB) - *3 m (W) x 8 m (L)*	1

3.6 L/UL space for light bus is provided for visitors who are travelling together in groups. 5.5 tonnes lorry will be deployed for the transportation of goods and garage to support the operation. Sufficient space is provided for vehicle to smoothly manouvre within the Site to ensure no vehicle will queue back to or reverse onto/from the Site to the public road (**Plan 7**). As trip generation and attraction of the proposed development is minimal (as shown at **Table 4** below), adverse traffic impact to the surrounding road network should not be anticipated.

Table 4 – Trip Generation and Attraction of the Proposed Development

Time Period	Trip Generation and Attraction						
	PC		LGV		LB		2-Way Total
	In	Out	In	Out	In	Out	
07:00 – 08:00	2	1	0	0	0	0	3
08:00 – 09:00*	**0**	**0**	**1**	**1**	**0**	**0**	**2**
09:00 – 10:00	0	2	0	0	0	0	2
10:00 – 11:00	0	8	0	0	1	1	10

11:00 – 12:00	0	5	0	0	1	1	7
12:00 – 13:00	1	1	1	1	0	0	4
13:00 – 14:00	1	0	0	0	0	0	1
14:00 – 15:00	7	1	0	0	1	1	10
15:00 – 16:00	6	0	0	0	1	1	8
16:00 – 17:00	2	0	0	0	0	0	2
17:00 – 18:00*	**1**	**0**	**1**	**1**	**0**	**0**	**3**
18:00 – 19:00	1	1	0	0	0	0	2
19:00 – 20:00	0	0	0	0	0	0	0
20:00 – 21:00	0	0	0	0	0	0	0
21:00 – 22:00	0	1	0	0	0	0	1

*AM and PM Peak hours of the day

3.7 The applicant will strictly follow the '*Code of Practice on Handling the Environmental Aspects of Temporary Uses and Open Storage Sites*' by the EPD to minimize all possible environmental impacts on the nearby sensitive receivers. The applicant will follow the *Professional Persons Environmental Consultative Committee Practice Notes* (ProPECCPNs) for sewage treatment at the Site. No public announcement system or any form of audio amplification system will be used at the Site during the planning approval period.

4) Conclusion

4.1 The proposed development will not create significant nuisance to the surrounding areas. Adequate mitigation measures are provided, i.e. the submission of the accepted drainage and FSIs proposals to mitigate any adverse impact arising from the proposed development (**Appendices I** and **II**).

4.2 In view of the above, the Board is hereby respectfully recommended to approve the subject application for '**Temporary Place of Recreation, Sports or Culture (Hobby Farm, Fishing and Prawning Ground), Barbecue Site and Holiday Camp with Ancillary Facilities for a Period of 3 Years and Associated Filling of Land**'.

R-riches Property Consultants Limited

April 2025

LIST OF PLANS

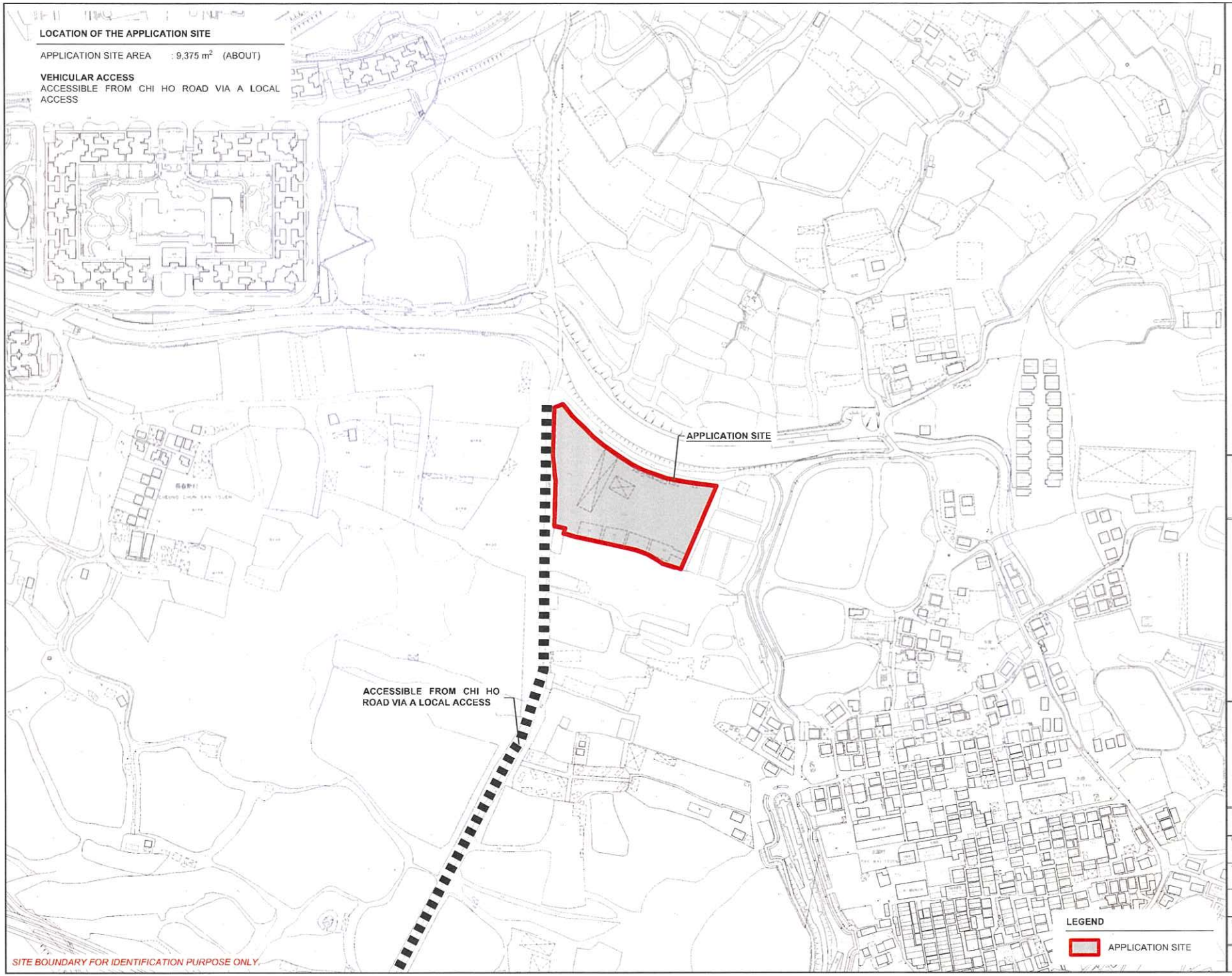

NORTH
W E
S

PLANNING CONSULTANT

R-Riches
Property Consultants Ltd.

PROJECT

TEMPORARY PLACE OF RECREATION, SPORTS OR CULTURE (HOBBY FARM, FISHING AND PRAWNING GROUND), BARBECUE SITE, AND HOLIDAY CAMP WITH ANCILLARY FACILITIES FOR A PERIOD OF 3 YEARS AND ASSOCIATED FILLING OF LAND

SITE LOCATION

VARIOUS LOTS IN D.D. 107, KAM TIN, YUEN LONG, NEW TERRITORIES

SCALE	1 : 4000 @ A4
DRAWN BY: MN	DATE: 17.4.2025
CHECKED BY	DATE
APPROVED BY	DATE
DWG. TITLE	LOCATION PLAN
DWG NO: PLAN 1	VER. 002

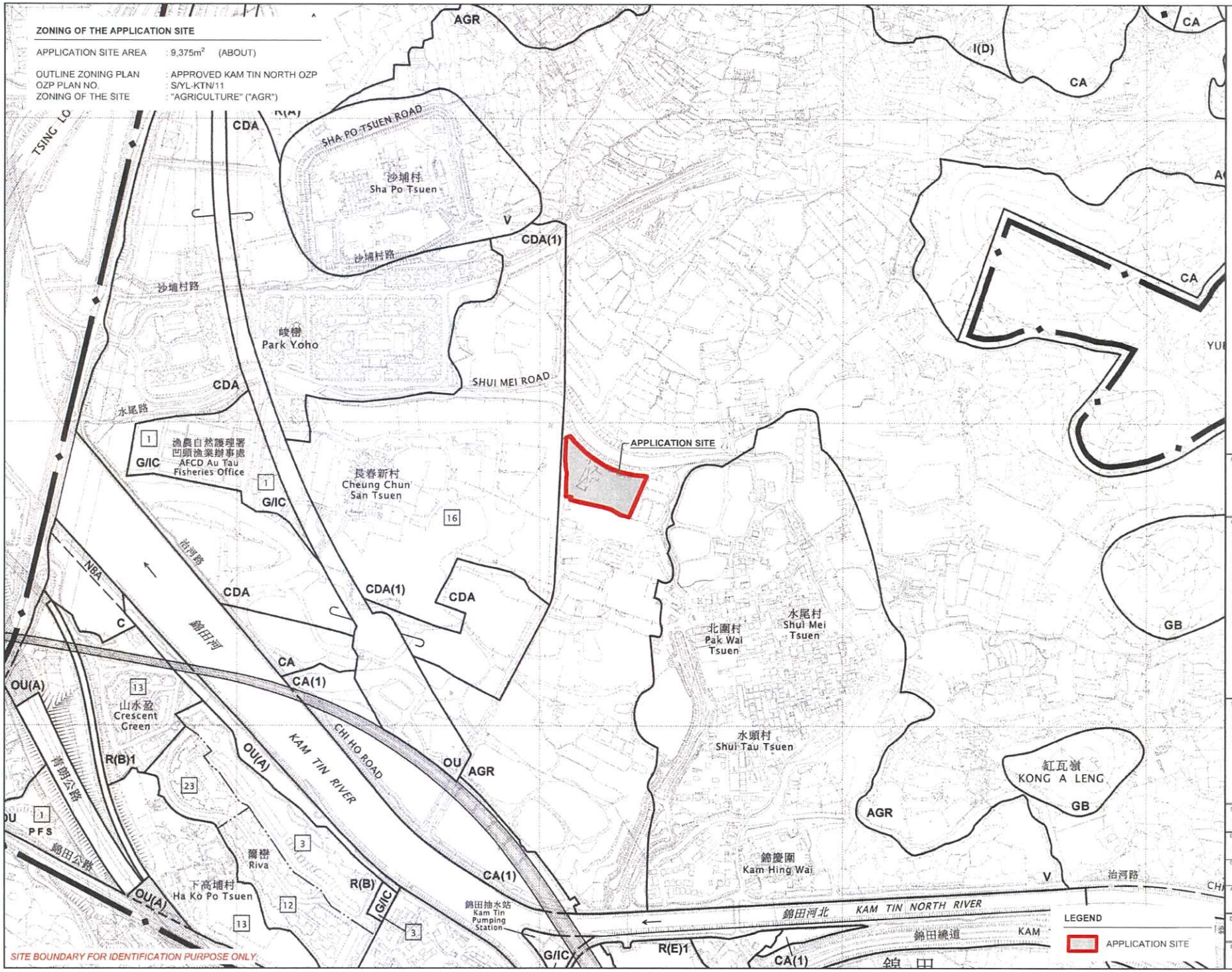

PLANNING CONSULTANT

R-Riches Property Consultants Ltd.

PROJECT

TEMPORARY PLACE OF RECREATION, SPORTS OR CULTURE (HOBBY FARM, FISHING AND PRAWNING GROUND), BARBECUE SITE, AND HOLIDAY CAMP WITH ANCILLARY FACILITIES FOR A PERIOD OF 3 YEARS AND ASSOCIATED FILLING OF LAND

SITE LOCATION

VARIOUS LOTS IN D.D. 107, KAM TIN, YUEN LONG, NEW TERRITORIES

SCALE	1 : 8000 @ A4
DRAWN BY: MN	DATE: 17.4.2025
CHECKED BY	DATE
APPROVED BY	DATE
DWG. TITLE	ZONING OF THE SITE
DWG NO.: PLAN 2	VER.: 002

LAND STATUS OF THE APPLICATION SITE

APPLICATION SITE AREA	: 9,375m² (ABOUT)
AREA OF PRIVATE LAND	: 9,375m² (ABOUT)
AREA OF GOVERNMENT LAND	: NOT APPLICABLE

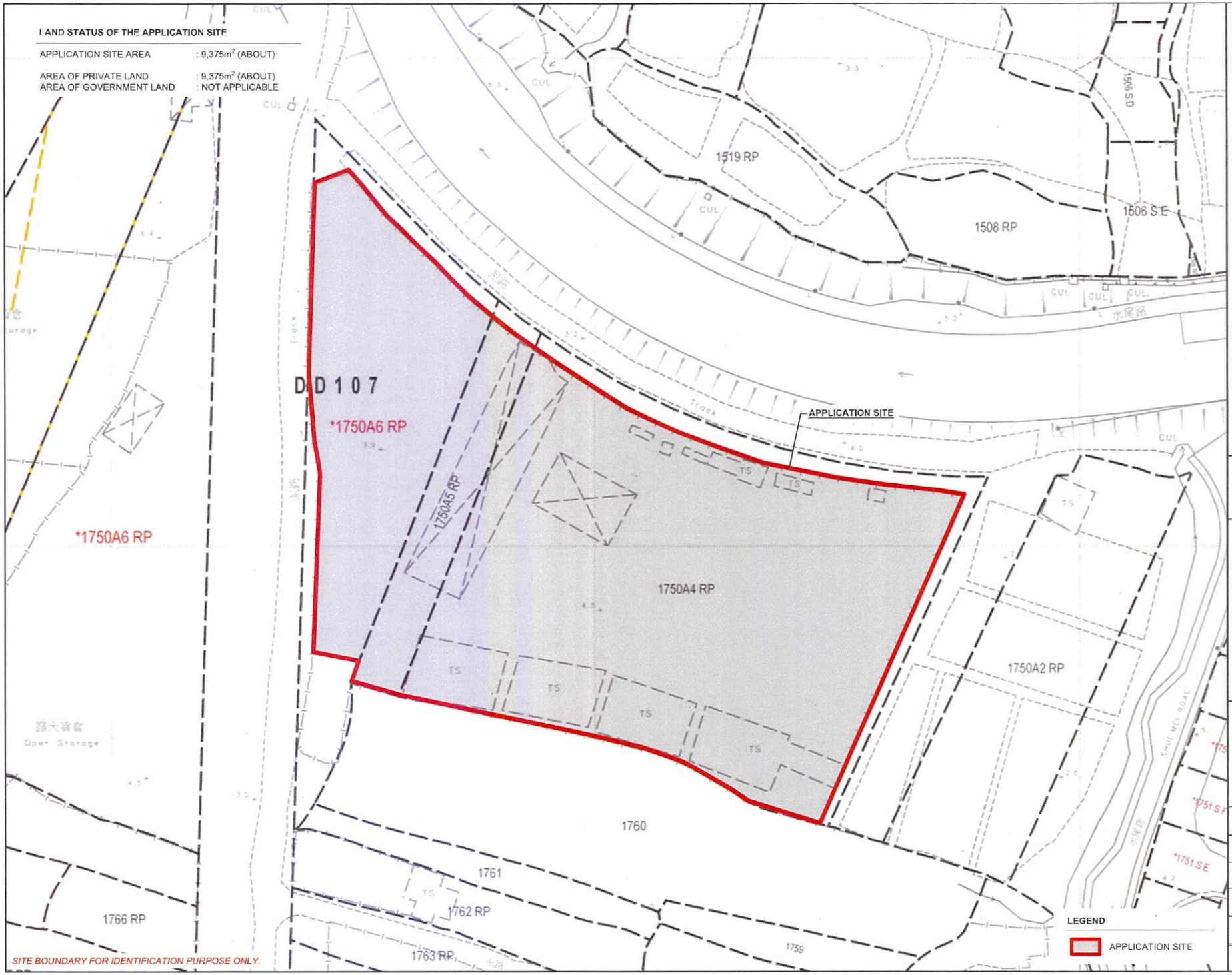

PLANNING CONSULTANT

R-Riches Property Consultants Ltd.

PROJECT

TEMPORARY PLACE OF RECREATION, SPORTS OR CULTURE (HOBBY FARM, FISHING AND PRAWNING GROUND), BARBECUE SITE, AND HOLIDAY CAMP WITH ANCILLARY FACILITIES FOR A PERIOD OF 3 YEARS AND ASSOCIATED FILLING OF LAND

SITE LOCATION

VARIOUS LOTS IN D.D. 107, KAM TIN, YUEN LONG, NEW TERRITORIES

SCALE	1 : 1000 @ A4
DRAWN BY: MN	DATE: 17.4.2025
CHECKED BY	DATE
APPROVED BY	DATE
DWG. TITLE	LAND STATUS OF THE SITE
DWG NO.: PLAN 3	VER.: 002

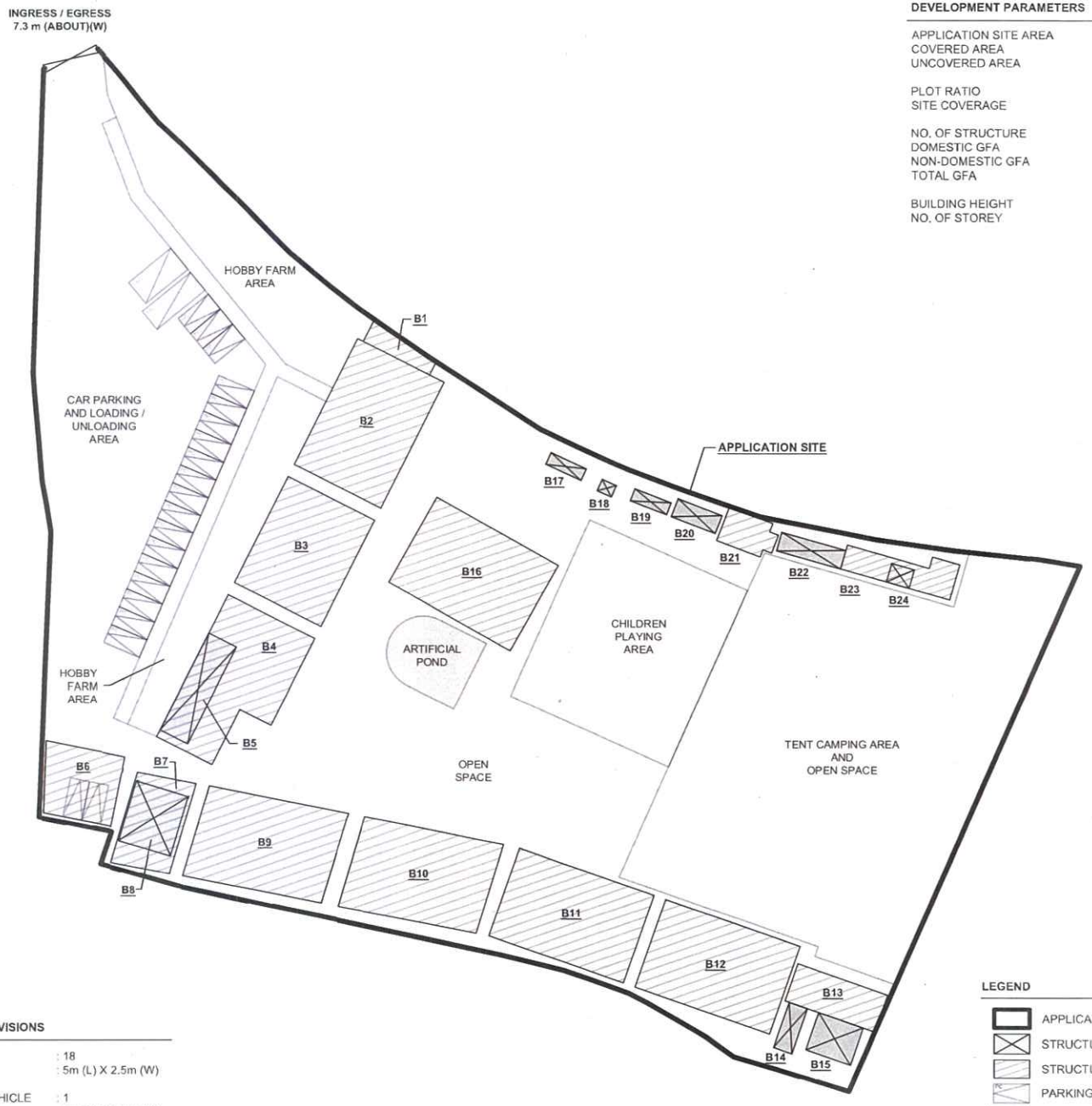

DEVELOPMENT PARAMETERS

APPLICATION SITE AREA	: 9,375 m^2	(ABOUT)
COVERED AREA	: 2,208 m^2	(ABOUT)
UNCOVERED AREA	: 7,167 m^2	(ABOUT)
PLOT RATIO	: 0.24	(ABOUT)
SITE COVERAGE	: 24 %	(ABOUT)
NO. OF STRUCTURE	: 24	
DOMESTIC GFA	: NOT APPLICABLE	
NON-DOMESTIC GFA	: 2,208 m^2	(ABOUT)
TOTAL GFA	: 2,208 m^2	(ABOUT)
BUILDING HEIGHT	: 2.8m - 5m	(ABOUT)
NO. OF STOREY	: 1	

PARKING AND LOADING/UNLOADING PROVISIONS

NO. OF PRIVATE CAR PARKING SPACE	: 18
DIMENSION OF PARKING SPACE	: 5m (L) X 2.5m (W)
NO. OF L/UL SPACE FOR LIGHT GOODS VEHICLE	: 1
DIMENSION OF L/UL SPACE	: 7m (L) X 3.5m (W)
NO. OF L/UL SPACE FOR LIGHT BUS	: 1
DIMENSION OF L/UL SPACE	: 8m (L) X 3m (W)

LEGEND

- APPLICATION SITE
- STRUCTURE (ENCLOSED)
- STRUCTURE (CANOPY)
- PARKING SPACE (PC)
- LOADING / UNLOADING SPACE (LGV)
- LOADING / UNLOADING SPACE (LB)
- INGRESS / EGRESS

NORTH
W E
S

PLANNING CONSULTANT

R-Riches Property Consultants Ltd.

PROJECT

TEMPORARY PLACE OF RECREATION, SPORTS OR CULTURE (HOBBY FARM, FISHING AND PRAWNING GROUND), BARBECUE SITE, AND HOLIDAY CAMP WITH ANCILLARY FACILITIES FOR A PERIOD OF 3 YEARS AND ASSOCIATED FILLING OF LAND

SITE LOCATION

VARIOUS LOTS IN D.D. 107, KAM TIN, YUEN LONG, NEW TERRITORIES

SCALE: 1 : 800 @ A4	
DRAWN BY: MN	DATE: 17.4.2025
REVISED BY:	DATE:
APPROVED BY:	DATE:
DWG. TITLE: LAYOUT PLAN	
DWG NO: PLAN 4	VER: 002

STRUCTURE	USE	COVERED AREA	GROSS FLOOR AREA	BUILDING HEIGHT
B1	STORAGE OF TOOLS	$24m^2$ (ABOUT)	$24m^2$ (ABOUT)	3m (ABOUT)(1-STOREY)
B2*	RAIN SHELTER FOR CHILDREN PLAYING AREA	$227m^2$ (ABOUT)	$227m^2$ (ABOUT)	5m (ABOUT)(1-STOREY)
B3*	RAIN SHELTER FOR BARBECUE	$193m^2$ (ABOUT)	$193m^2$ (ABOUT)	5m (ABOUT)(1-STOREY)
B4*	RAIN SHELTER FOR BARBECUE	$221m^2$ (ABOUT)	$221m^2$ (ABOUT)	5m (ABOUT)(1-STOREY)
B5	SHOP AND SERVICES	COVERED BY B4	COVERED BY B4	3m (ABOUT)(1-STOREY)
B6*	RAIN SHELTER FOR PARKING SPACE	$88m^2$ (ABOUT)	$88m^2$ (ABOUT)	4m (ABOUT)(1-STOREY)
B7*	RAIN SHELTER	$93m^2$ (ABOUT)	$93m^2$ (ABOUT)	5m (ABOUT)(1-STOREY)
B8	STORAGE OF TOOLS, RECEPTION	COVERED BY B7	COVERED BY B7	5m (ABOUT)(1-STOREY)
B9*	RAIN SHELTER FOR PRAWNING	$219m^2$ (ABOUT)	$219m^2$ (ABOUT)	5m (ABOUT)(1-STOREY)
B10*	RAIN SHELTER FOR PRAWNING	$219m^2$ (ABOUT)	$219m^2$ (ABOUT)	5m (ABOUT)(1-STOREY)
B11*	RAIN SHELTER FOR BARBECUE	$221m^2$ (ABOUT)	$221m^2$ (ABOUT)	5m (ABOUT)(1-STOREY)
B12*	RAIN SHELTER FOR BARBECUE	$221m^2$ (ABOUT)	$221m^2$ (ABOUT)	5m (ABOUT)(1-STOREY)
B13*	RAIN SHELTER	$62m^2$ (ABOUT)	$62m^2$ (ABOUT)	4m (ABOUT)(1-STOREY)
B14	ACTIVITIES ROOM	$31m^2$ (ABOUT)	$31m^2$ (ABOUT)	3m (ABOUT)(1-STOREY)
B15	ACTIVITIES ROOM	$15m^2$ (ABOUT)	$15m^2$ (ABOUT)	3m (ABOUT)(1-STOREY)
B16*	RAIN SHELTER FOR FISHING	$227m^2$ (ABOUT)	$227m^2$ (ABOUT)	5m (ABOUT)(1-STOREY)
B17	PORTABLE TOILET	$8m^2$ (ABOUT)	$8m^2$ (ABOUT)	2.8m (ABOUT)(1-STOREY)
B18	PORTABLE TOILET	$3m^2$ (ABOUT)	$3m^2$ (ABOUT)	2.8m (ABOUT)(1-STOREY)
B19	PORTABLE TOILET	$8m^2$ (ABOUT)	$8m^2$ (ABOUT)	2.8m (ABOUT)(1-STOREY)
B20	PORTABLE TOILET	$15m^2$ (ABOUT)	$15m^2$ (ABOUT)	3m (ABOUT)(1-STOREY)
B21	RAIN SHELTER	$31m^2$ (ABOUT)	$31m^2$ (ABOUT)	3.5m (ABOUT)(1-STOREY)
B22	STORAGE OF TOOLS	$22m^2$ (ABOUT)	$22m^2$ (ABOUT)	3m (ABOUT)(1-STOREY)
B23	RAIN SHELTER	$60m^2$ (ABOUT)	$60m^2$ (ABOUT)	3m (ABOUT)(1-STOREY)
B24	METER ROOM	COVERED BY B23	COVERED BY B23	3m (ABOUT)(1-STOREY)
	TOTAL	**2,208 m^2 (ABOUT)**	**2,208 m^2 (ABOUT)**	

*4 SIDE OPENED SHELTER

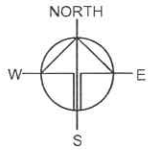

PLANNING CONSULTANT

R-Riches Property Consultants Ltd.

PROJECT

TEMPORARY PLACE OF RECREATION, SPORTS OR CULTURE (HOBBY FARM, FISHING AND PRAWNING GROUND), BARBECUE SITE, AND HOLIDAY CAMP WITH ANCILLARY FACILITIES FOR A PERIOD OF 3 YEARS AND ASSOCIATED FILLING OF LAND

SITE LOCATION

VARIOUS LOTS IN D.D. 107, KAM TIN, YUEN LONG, NEW TERRITORIES

SCALE

-

DRAWN BY	DATE
MN	17.4.2025
REVISED BY	DATE
APPROVED BY	DATE

DWG. TITLE

DETAILS OF STRUCTURES

DWG NO.	VER.
PLAN 5	002

PAVED RATIO OF THE APPLICATION SITE

APPLICATION SITE AREA	: 9,375 m^2	(ABOUT)
COVERED BY STRUCTURE	: 2,208 m^2	(ABOUT)
LAND FILLING AREA	: 4,042 m^2	(ABOUT)
DEPTH OF LAND FILLING	: NOT MORE THAN 0.2m	(ABOUT)
MATERIAL OF LAND FILLING	: CONCRETE	
PURPOSE OF LAND FILLING	: SITE FORMATION OF STRUCTURES, CHILDREN PLAYING AREA, AND CIRCULATION SPACE	
AREA COVERED BY GRAVEL	: 1,630 m^2	(ABOUT)
USE	: VEHICLE PARKING AND L/UL AREA	
SOILED GROUND AREA	: 1,021 m^2	(ABOUT)
USE	: OPEN SPACE, PARKING, L/UL SPACES	
LAWN AREA	: 1,921 m^2	(ABOUT)
USE	: TENT CAMPING AREA AND OPEN SPACE	
HOBBY FARM AREA	: 661 m^2	(ABOUT)
USE	: HOBBY FARM	
ARTIFICIAL POND AREA	: 100 m^2	(ABOUT)
USE	: FISHING AND PRAWN-FISHING	

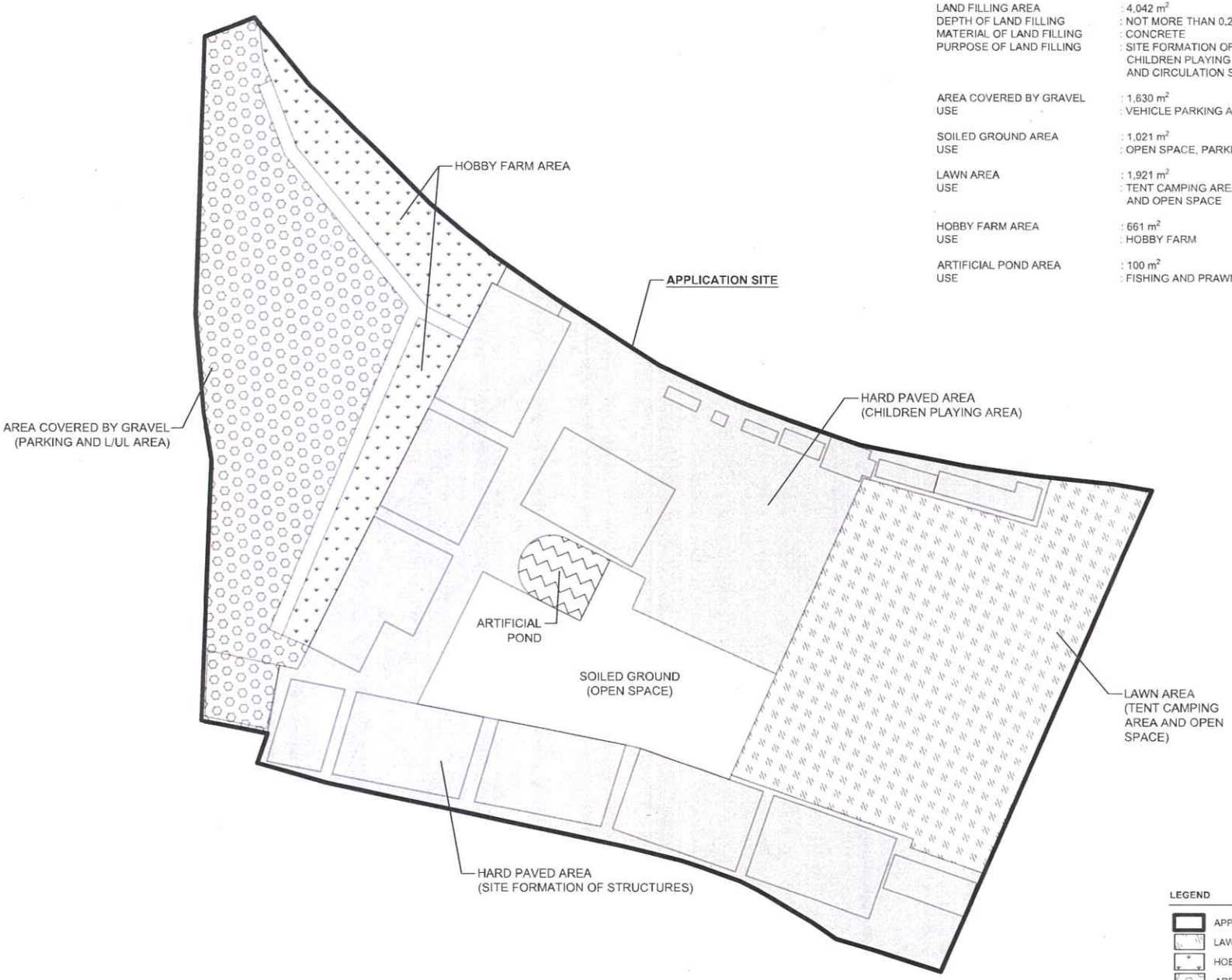

LEGEND

- APPLICATION SITE
- LAWN AREA
- HOBBY FARM AREA
- AREA COVERED BY GRAVEL
- SOILED GROUND AREA
- HARD PAVED AREA

SITE BOUNDARY FOR IDENTIFICATION PURPOSE ONLY.

NORTH
W E
S

PLANNING CONSULTANT

R-Riches Property Consultants Ltd.

PROJECT

TEMPORARY PLACE OF RECREATION, SPORTS OR CULTURE (HOBBY FARM, FISHING AND PRAWNING GROUND), BARBECUE SITE, AND HOLIDAY CAMP WITH ANCILLARY FACILITIES FOR A PERIOD OF 3 YEARS AND ASSOCIATED FILLING OF LAND

SITE LOCATION

VARIOUS LOTS IN D.D. 107, KAM TIN, YUEN LONG, NEW TERRITORIES

SCALE

1 : 800 @ A4

DRAWN BY	DATE
MN	17.4.2025
CHECKED BY	DATE
APPROVED BY	DATE

DWG. TITLE

PAVED RATIO PLAN

DWG NO	VER.
PLAN 6	002

SWEPT PATH ANALYSIS

TYPE OF VEHICLE : LIGHT GOODS VEHICLE
DIMENSION OF VEHICLE : 2.1m (W) X 5.2m (L)

SWEPT PATHS GENERATED BY AUTODESK VEHICLE TRACKING.

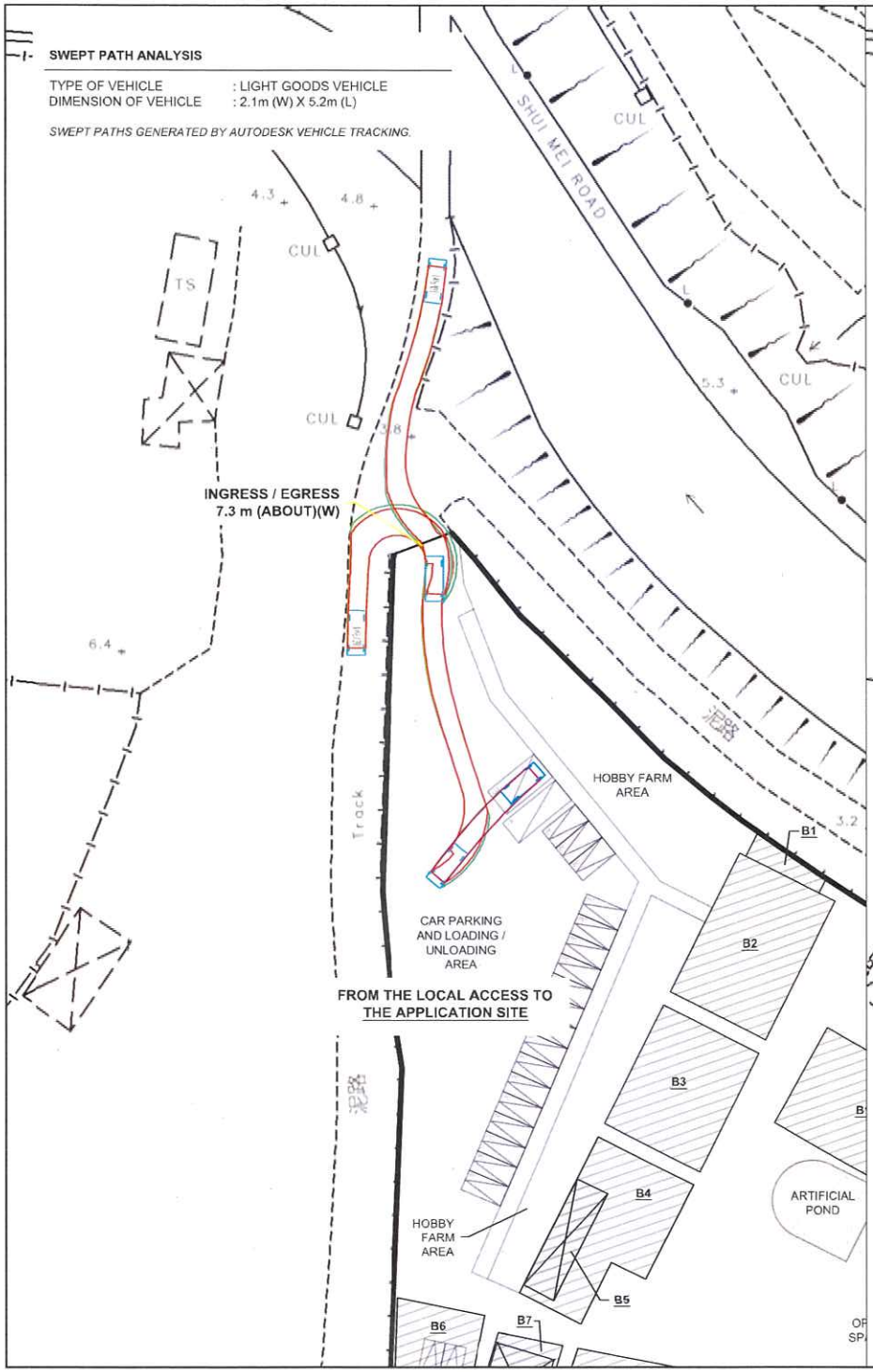

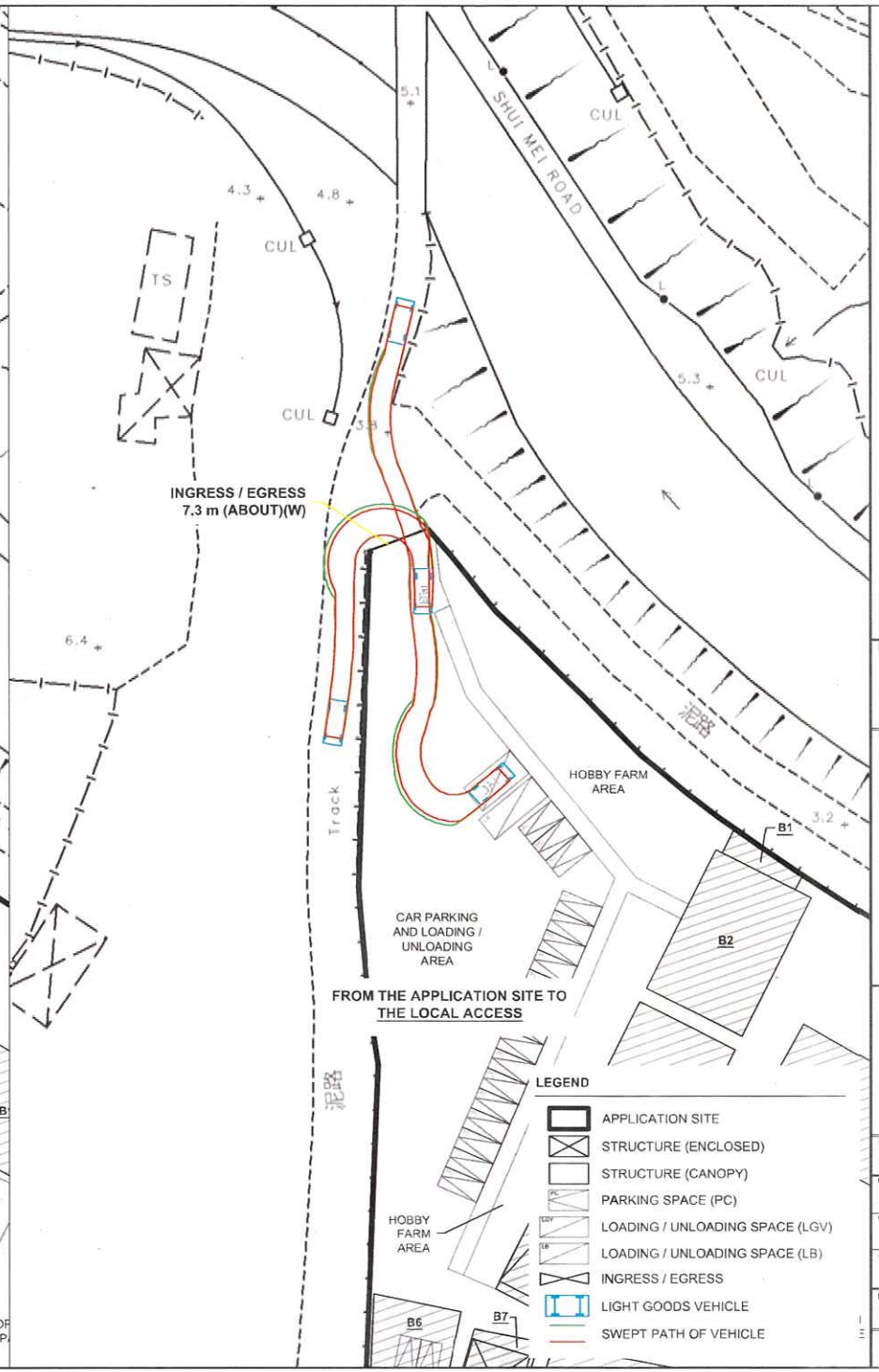

NORTH
W E
S

PLANNING CONSULTANT

R-Riches Property Consultants Ltd.

PROJECT

TEMPORARY PLACE OF RECREATION, SPORTS OR CULTURE (HOBBY FARM, FISHING AND PRAWNING GROUND), BARBECUE SITE, AND HOLIDAY CAMP WITH ANCILLARY FACILITIES FOR A PERIOD OF 3 YEARS AND ASSOCIATED FILLING OF LAND

SITE LOCATION

VARIOUS LOTS IN D.D. 107, KAM TIN, YUEN LONG, NEW TERRITORIES

SCALE	1 : 800 @ A4
DRAWN BY	MN
DATE	17.4.2025
CHECKED BY	
DATE	
APPROVED BY	
DATE	
DWG. TITLE	SWEPT PATH ANALYSIS
DWG NO.	PLAN 7
VER.	002

Annex II

Revised Drainage Proposal

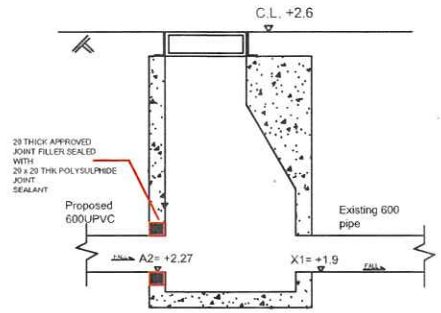

Connection Details of Existing Stormwater Manhole SCH1028769
(For Typical Existing Stormwater Manhole)

Note:

1. Catchpit (CP7) with desilting facility shall follow CEDD standard drawing No. C2406I.

2. Catchpit and UC follows Typical Details of Geotechnical Manual for Slope Fig.8.10 and Fig.8.11 respectively.

3. All UCs are covered by cast iron

4. The inverted level of the connection point shall be verified on site prior the commencement of work

Legend:

- Proposed 300UC/375UC/450UC(1:150) with cast iron cover/ 600PVC pipe (1:80)
- Proposed Catchpit
- Existing Stormwater Manhole

Company:

恆協工程有限公司
Handship Engineering Company Limited

Project:

Application No.
A/YL-KTN/1049

Title:

Drainage Proposal-Layout

Dwg No: Fig.1

File: DD107 Lot1750

Date: 17-4-2025

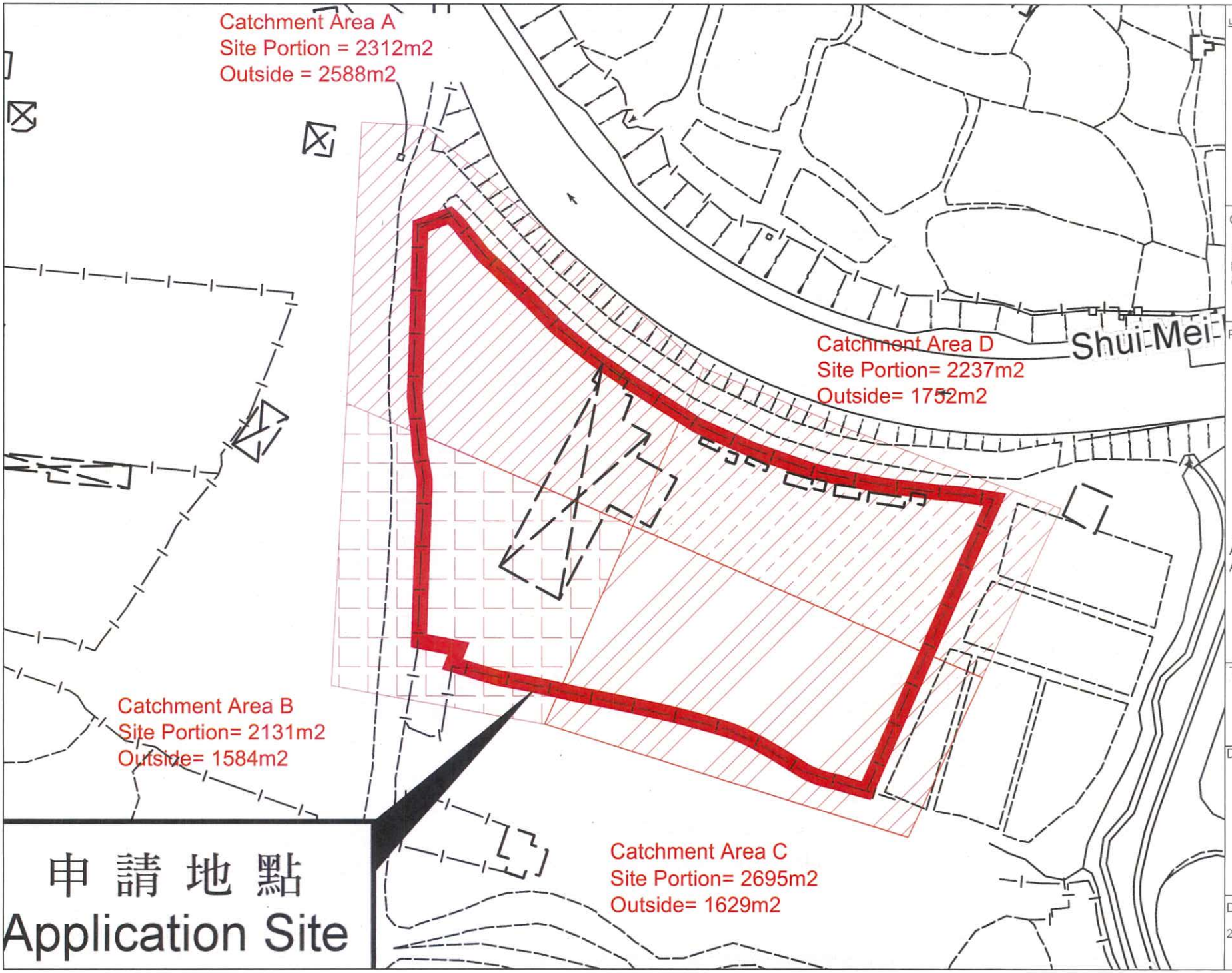

Legend:

- Proposed 300UC/375UC/450UC(1:150) with cast iron cover/ 600PVC pipe (1:80)
- Proposed Catchpit
- Existing Stormwater Manhole

Company:

恆協工程有限公司
Handship Engineering Company Limited

Project:

Application No.
A/YL-KTN/1049

Title:

Catchment Area

Dwg No:

Fig.2

File:

DD107
Lot1750

Date:

20-2-2025

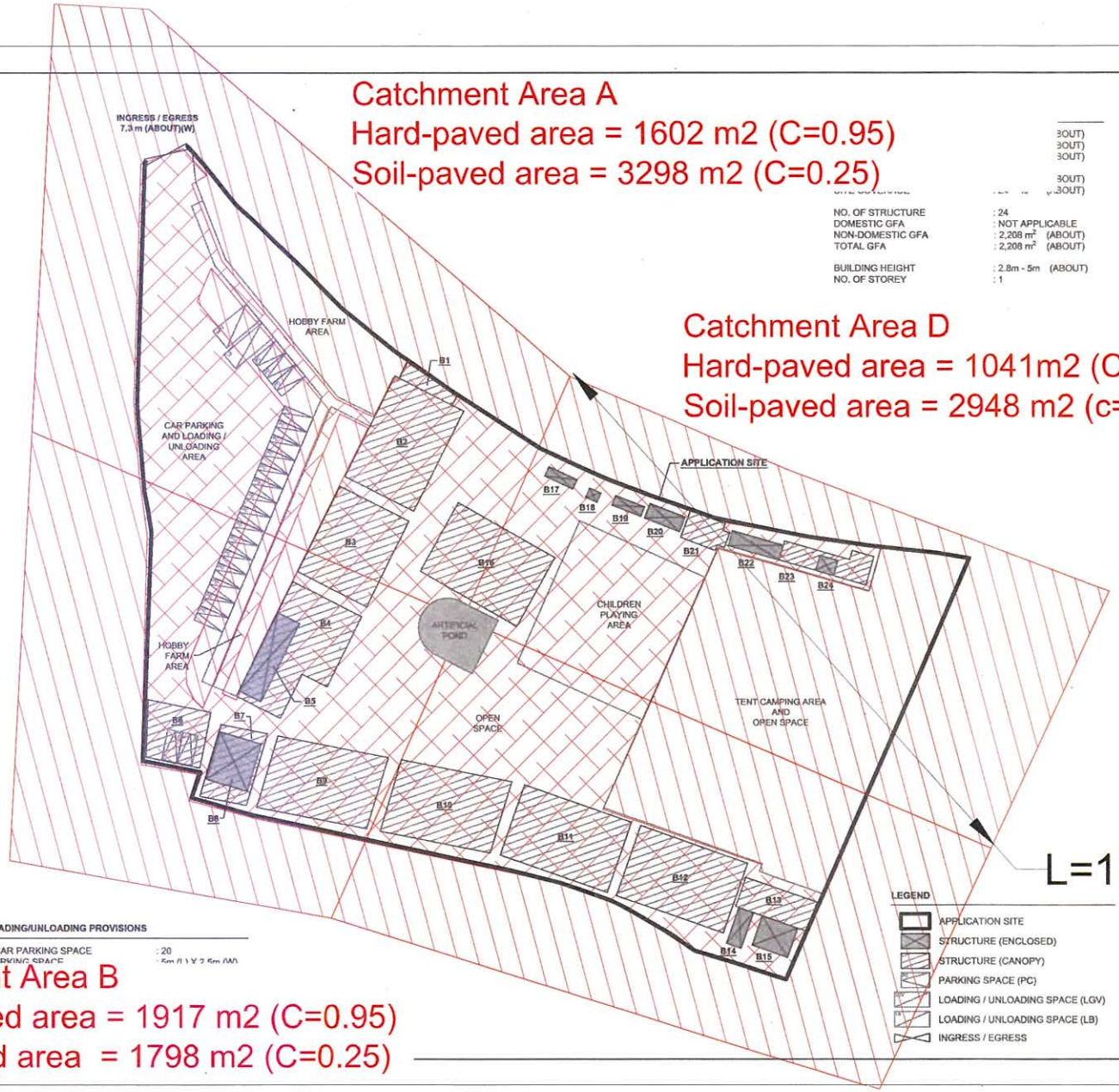

Catchment Area A
Hard-paved area = 1602 m2 (C=0.95)
Soil-paved area = 3298 m2 (C=0.25)

Catchment Area D
Hard-paved area = 1041m2 (C=0.95)
Soil-paved area = 2948 m2 (c=0.25)

Catchment Area B
Hard-paved area = 1917 m2 (C=0.95)
Soil-paved area = 1798 m2 (C=0.25)

Catchment Area C
Hard-paved area = 2021m2 (C=0.95)
Soil-paved area = 2303m2 (C=0.25)

Hard-paved Area (C=0.95)

Soil-paved Area (C=0.25)

NO. OF STRUCTURE	: 24
DOMESTIC GFA	: NOT APPLICABLE
NON-DOMESTIC GFA	: 2,208 m² (ABOUT)
TOTAL GFA	: 2,208 m² (ABOUT)
BUILDING HEIGHT	: 2.8m - 5m (ABOUT)
NO. OF STOREY	: 1

PARKING AND LOADING/UNLOADING PROVISIONS

NO. OF PRIVATE CAR PARKING SPACE	: 20
DIMENSION OF PARKING SPACE	: 5m (L) X 2.5m (W)

LEGEND
- APPLICATION SITE
- STRUCTURE (ENCLOSED)
- STRUCTURE (CANOPY)
- PARKING SPACE (PC)
- LOADING / UNLOADING SPACE (LGV)
- LOADING / UNLOADING SPACE (LB)
- INGRESS / EGRESS

NORTH
W E
S

PLANNING CONSULTANT
R-Riche Property Consultants

PROJECT
TEMPORARY PLACE RECREATION, SPORTS CULTURE (HOBBY FA FISHING AND PRAWN GROUND), BARBECUE S HOLIDAY CAMP AND SHOP SERVICES WITH ANCILL FACILITIES FOR A PERIOD YEARS AND ASSOCIA FILLING OF LAND

SITE LOCATION
VARIOUS LOTS IN D.D. 107, TIN, YUEN LONG, TERRITORIES

SCALE	1 : 800 @ A4
DRAWN BY	MN
DATE	12.8.2024
REVISED BY	
DATE	
APPROVED BY	
DATE	
DWG. TITLE	LAYOUT PLAN
DWG NO.	PLAN 4
VER.	001

Legend:
- Proposed 300UC/375UC/450UC(1:150) with cast iron cover/ 600PVC pipe (1:80)
- Proposed Catchpit
- Existing Stormwater Manhole

Company:
恆協工程有限公司
Handship Engineering Company Limited

Project:

Application No.
A/YL-KTN/1049

Title:
Catchment Area

Dwg No:
Fig.3

File:
DD107
Lot1750

Date:
20-2-2025

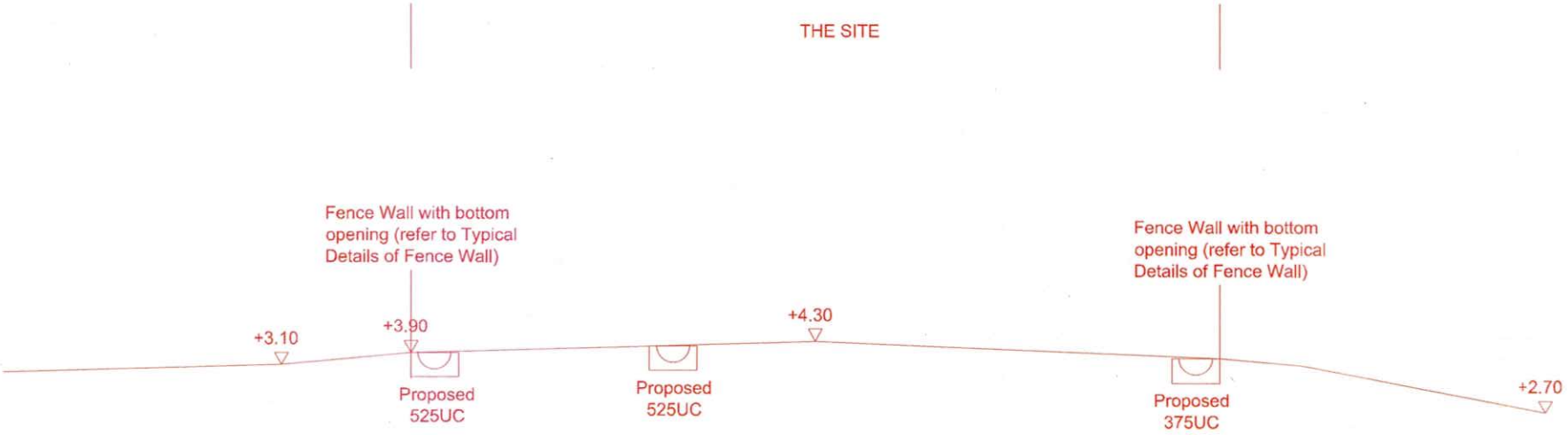

SECTION A-A

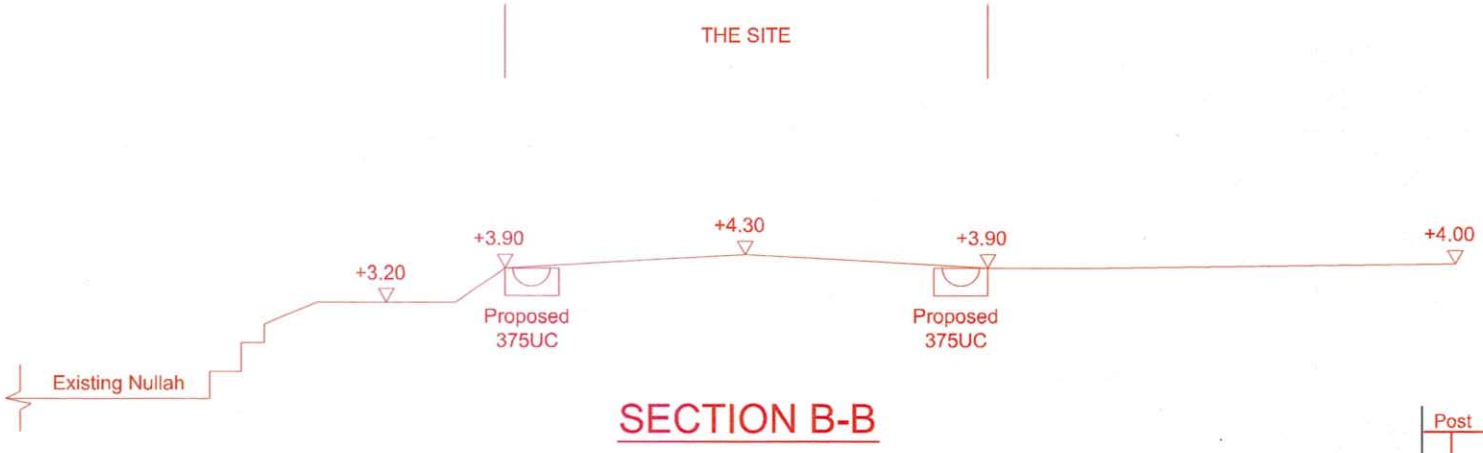

SECTION B-B

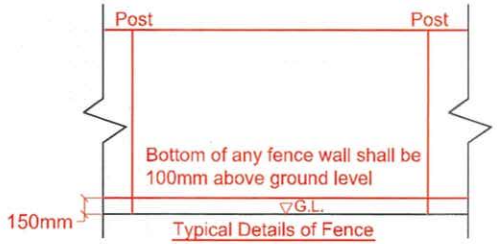

Typical Details of Fence Wall Bottom Opening

Legend:

- Proposed 300UC/375UC/450UC(1:150) with cast iron cover/ 600PVC pipe (1:80)
- Proposed Catchpit
- Existing Stormwater Manhole

Company:

恒協工程有限公司
Handship Engineering Company Limited

Project:

Application No.
A/YL-KTN/1049

Title:

Section

Dwg No:

Fig.4

File:

DD107
Lot1750

Date:

20-2-2025

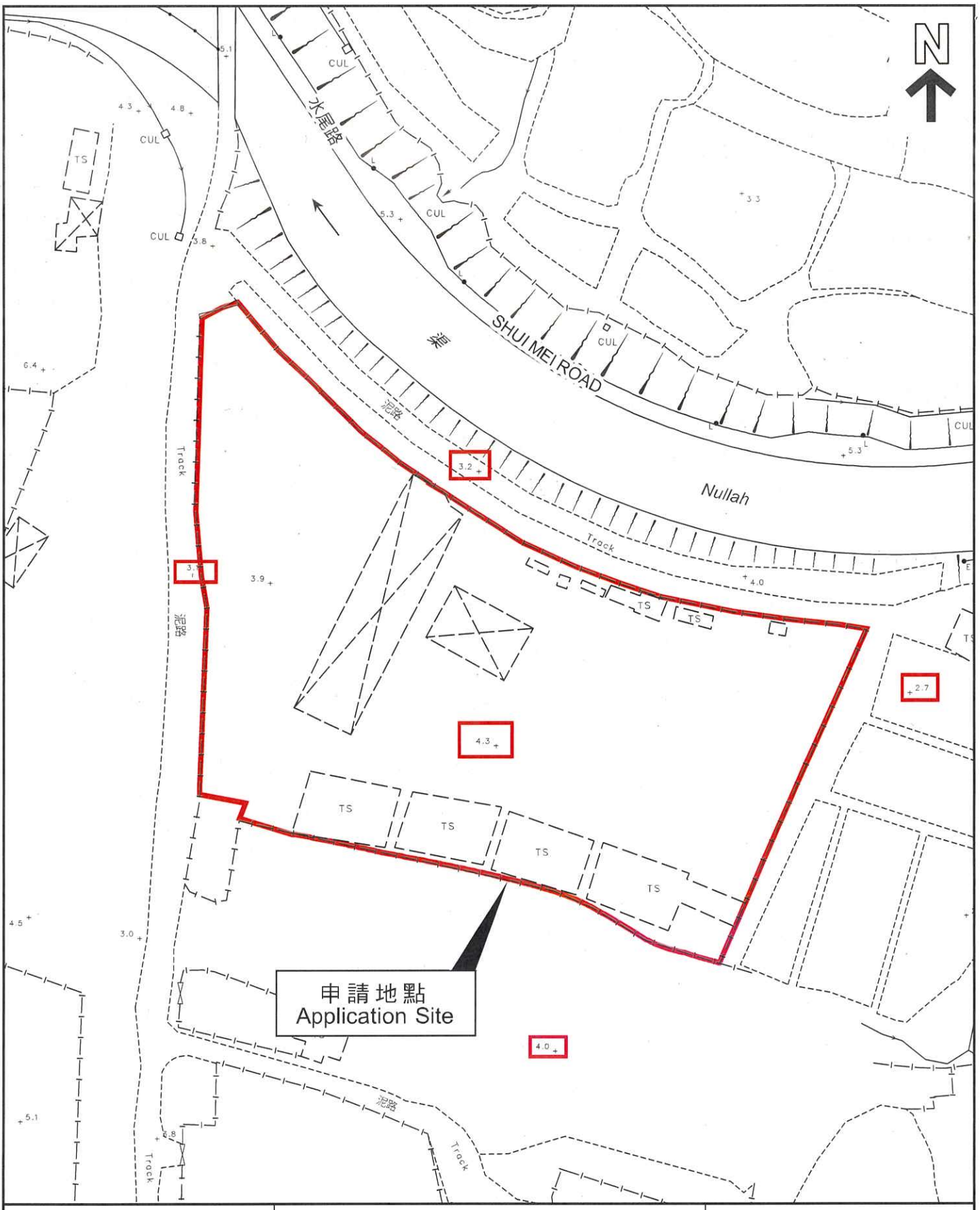

本摘要圖於2024年9月10日擬備，
所根據的資料為測量圖編號
6-NE-7A
EXTRACT PLAN PREPARED ON 10.9.2024
BASED ON SURVEY SHEET No.
6-NE-7A

平面圖 SITE PLAN

申請地點界線只作識別用
APPLICATION SITE BOUNDARY
FOR IDENTIFICATION PURPOSE ONLY

參考編號
REFERENCE No.
A/YL-KTN/1049

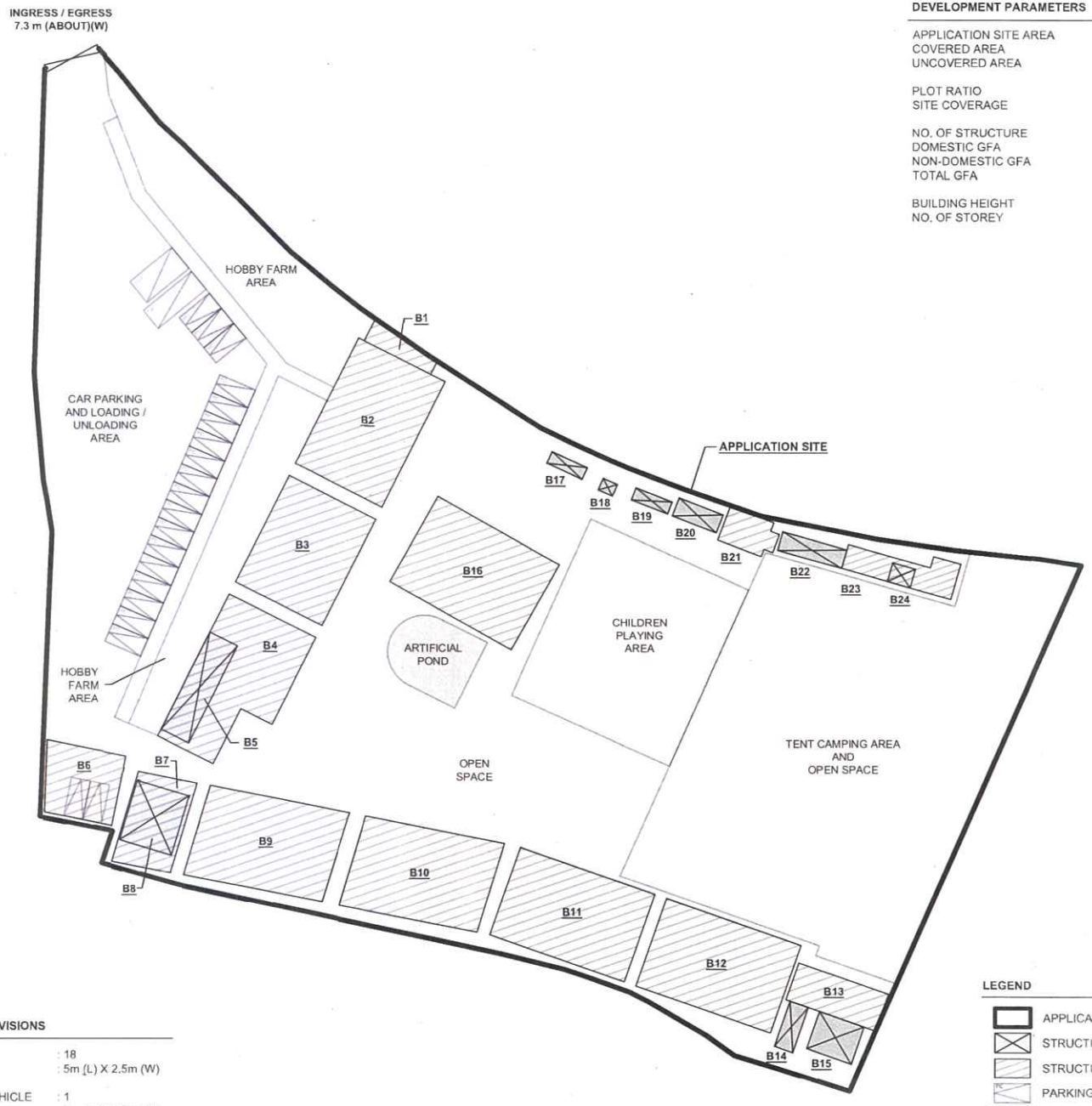

DEVELOPMENT PARAMETERS

APPLICATION SITE AREA	: 9,375 m^2	(ABOUT)
COVERED AREA	: 2,208 m^2	(ABOUT)
UNCOVERED AREA	: 7,167 m^2	(ABOUT)
PLOT RATIO	: 0.24	(ABOUT)
SITE COVERAGE	: 24 %	(ABOUT)
NO. OF STRUCTURE	: 24	
DOMESTIC GFA	: NOT APPLICABLE	
NON-DOMESTIC GFA	: 2,208 m^2	(ABOUT)
TOTAL GFA	: 2,208 m^2	(ABOUT)
BUILDING HEIGHT	: 2.8m - 5m	(ABOUT)
NO. OF STOREY	: 1	

PARKING AND LOADING/UNLOADING PROVISIONS

NO. OF PRIVATE CAR PARKING SPACE	: 18
DIMENSION OF PARKING SPACE	: 5m (L) X 2.5m (W)
NO. OF L/UL SPACE FOR LIGHT GOODS VEHICLE	: 1
DIMENSION OF L/UL SPACE	: 7m (L) X 3.5m (W)
NO. OF L/UL SPACE FOR LIGHT BUS	: 1
DIMENSION OF L/UL SPACE	: 8m (L) X 3m (W)

LEGEND

- APPLICATION SITE
- STRUCTURE (ENCLOSED)
- STRUCTURE (CANOPY)
- PARKING SPACE (PC)
- LOADING / UNLOADING SPACE (LGV)
- LOADING / UNLOADING SPACE (LB)
- INGRESS / EGRESS

NORTH
W E
S

PLANNING CONSULTANT

R-Riches Property Consultants Ltd.

PROJECT

TEMPORARY PLACE OF RECREATION, SPORTS OR CULTURE (HOBBY FARM, FISHING AND PRAWNING GROUND), BARBECUE SITE, AND HOLIDAY CAMP WITH ANCILLARY FACILITIES FOR A PERIOD OF 3 YEARS AND ASSOCIATED FILLING OF LAND

SITE LOCATION

VARIOUS LOTS IN D.D. 107, KAM TIN, YUEN LONG, NEW TERRITORIES

SCALE: 1 : 800 @ A4	
DRAWN BY: MN	DATE: 17.4.2025
REVISED BY:	DATE:
APPROVED BY:	DATE:
DWG. TITLE: LAYOUT PLAN	
DWG NO.: PLAN 4	VER.: 002

Company: Handship Engineering Company Limited
Project: Proposed drainage at Lots 1750A4 RP (Par t), 1750A5 RP and 1750A6 RP (Part) in D.D. 107, Fung Kat Heung, Kam Tin, Yuen Long
Date: 20/2/2025

Calculation for Design of Channels:

Catchment Area :						k		i		Peak runoff		
	m^2	km^2								liter/mun	liter/min	m^3/s
A(Hard-paved)	1602	0.001602				0.95		259.4		6585	10153	0.1098
A(Soil-paved)	3298	0.003298				0.25		259.4		3568		0.0595
B(Hard-paved)	1917	0.001917				0.95		259.4		7880	9825	0.1313
B(Soil-paved)	1798	0.001798	X	0.278	X	0.25	X	259.4	=	1945		0.0324
C(Hard-paved)	2021	0.002021				0.95		259.4		8308	10799	0.1385
C(Soil-paved)	2303	0.002303				0.25		259.4		2491		0.0415
D(Hard-paved)	1041	0.001041				0.95		259.4		4279	7468	0.0713
D(Soil-paved)	2948	0.002948				0.25		259.4		3189		0.0532
Total=	16928								Total =	38246		0.6374

Peripheral Channel in Area A, Catchment Area A + B
Total Peak runoff = 19979 lit/min
Provide 525UC (1:150)

Peripheral Channel in Area B, Catchment Area B
Total Peak runoff = 9825 lit/min
Provide 375UC (1:150)

Peripheral Channel in Area C, Catchment Area C
Total Peak runoff = 10799 lit/min
Provide 375UC (1:150)

Peripheral Channel in Area D, Catchment Area C + D
Total Peak runoff = 18268 lit/min
Provide 450UC (1:150)

U-Channel From CP2 to CP7, Catchment Area B + C
Total Peak runoff = 20625 lit/min
Provide 525UC (1:150)

Pipe From CP7 to SCH1028770, Catchment Area A+ B + C + D
Total Peak runoff = 38246 lit/min

$t = 0.14465\ L/H^{0.2}A^{0.}$
$= 0.14465*101/1^{0.2}*16928^{0.}$
$= 5.518$ min

$i = 1.111*a/(t+b)^c$ **(50 yrs return period, Table 3a, Corrigendum 2024, SDM)**
$= 1.111*505.5/(5.518+3.29)^{0.7}$
$= 259.4$ mm/hr **(11.1% increase due to climate change, Corrigendum 2022, SDM)**

Colebrook-White Equation

$$V = -\sqrt{(8gDs)}\log\left(\frac{ks}{3.7D} + \frac{2.51\nu}{D\sqrt{(2gDs)}}\right)$$

where :

V	=		mean velocity (m/s)	
g	=	9.81	m/s2	gravitational acceleration (m/s2)
D	=	0.6	m	internal pipe diameter (m)
ks	=	0.00015	m	hydraulic pipeline roughness (m) (Table 5, from DSD Sewerage Manual, concrete pipe)
v	=	1.14E-06	m2/s	kinematic viscosity of fluid (m2/s)
s	=	0.011111		hydraulic gradient (1:90)
Pipe area	=	0.283	m2	
10% reduction of flow area	=	0.254	m2	
Therefore, design V of pipe capacity	=	2.960	m/s	(Between 0.7 m/s and 3 m/s, OK)
Capacity of Proposed 600 mm dia pipe	=	0.8*V*A		(0.8 factor is adopted for sedimentation)
	=	0.670	m3/s	
	=	40178.33	lit/min	(1 m3 = 1000 lit and 1 min = 60s)
	>	38246	lit/min	OK

Figure 1 - Chart for the rapid design of U-shaped and half-round channels up to 600 mm

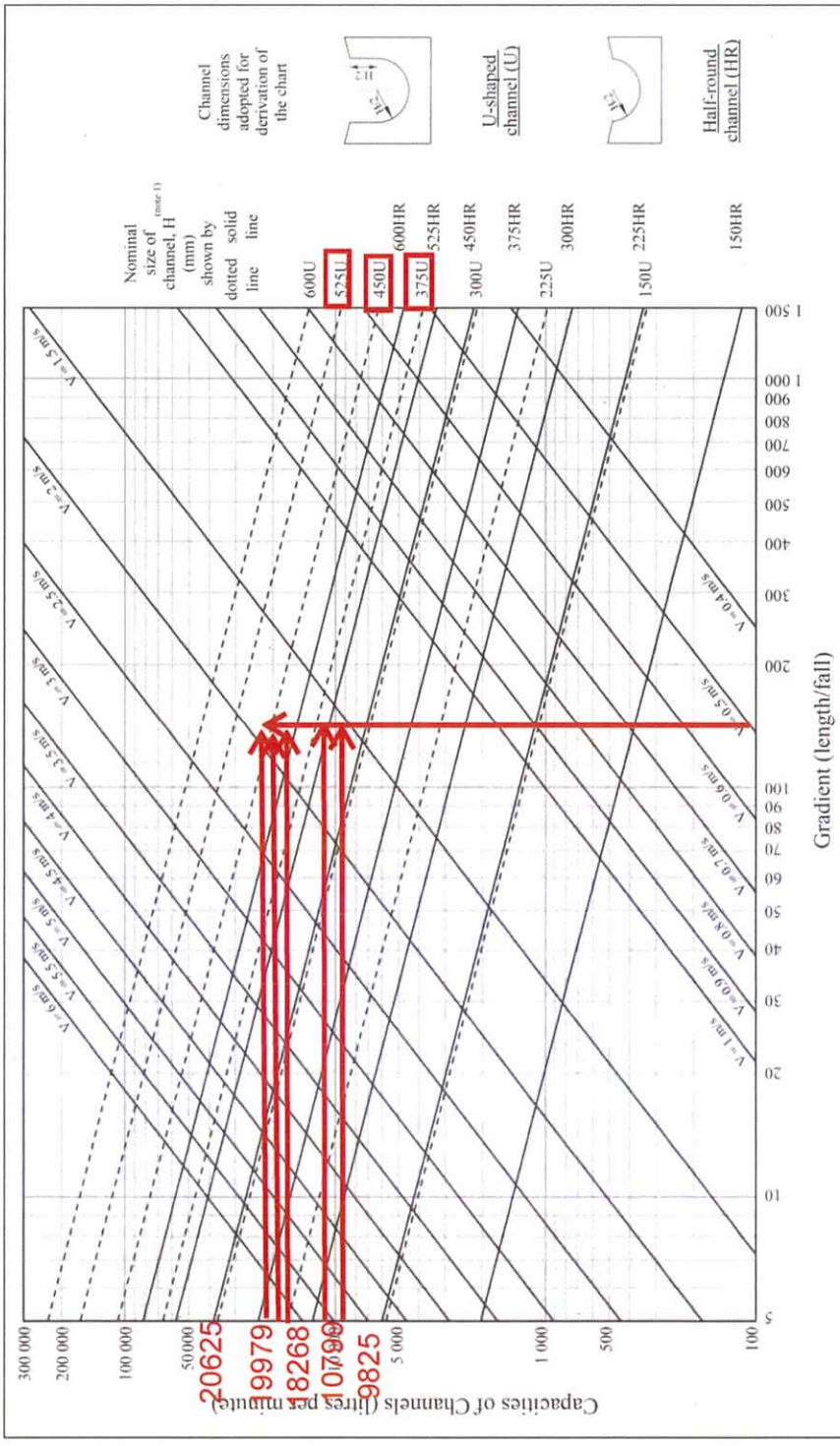

Note: (1) Refer to the latest CEDD Standard Drawings for the details of U-shaped (U) and half-round (HR) channels.

GEOINFO MAP
地理資訊地圖

前往地圖: https://www.map.gov.hk/gm/geo:22.4487,114.0579?z=2257

Total Catchment Area for Existing 600mm dia pipe (SWD1065691)

由「地理資訊地圖」網站提供: https://www.map.gov.hk

Company: Handship Engineering Company Limited
Project: Proposed drainage at Lots 1750A4 RP (Par t), 1750A5 RP and 1750A6 RP (Part) in D.D. 107, Fung Kat Heung, Kam Tin, Yuen Long
Date: 20/2/2025

Check Existing 600mm dia Pipe

Total Catchment Area	=	**27262**	**m2**					
Extra Catchment Area	=	27262	-	16928	=	10334	m2	
t	=	$0.14465\ L/H^{0.2}A^{0.1}$						
	=	$0.14465*180/1^{0.2}*27262^{0.1}$						
	=	5.261	min					
i	=	$1.111*a/(t+b)^{c}$						
	=	$1.111*505.5/(5.261+2.9)^{0.355}$						
	=	266.5	mm/hr					
Extra Runoff	=	0.278CiA						
	=	0.278	*	0.25	*	266.5	*	10334 /1000000
	=	0.191433	m3/s					
	=	11486	liter/min					
Total Q	=	11486	+	38246				
	=	49732	liter/min					

(50 yrs return period, Table 3a, Corrigendum 2024, SDM)

(11.1% increase due to climate change, Corrigendum 2022, SDM)

For gradient 1:100, existing 375UC has adequate capacity for stormwater collection system

Total Peak runoff to SWD1065691 = 49732 liter/min
(Site catchment and upstream area)
Check existing 600mm dia. Pipes (SWD1065691) by Colebrook-White Equation

$$V = -\sqrt{(8gDs)}\log\left(\frac{ks}{3.7D} + \frac{2.51v}{D\sqrt{(2gDs)}}\right)$$

where :

V	=			mean velocity (m/s)
g	=	9.81	m/s2	gravitational acceleration (m/s2)
D	=	0.6	m	internal pipe diameter (m)
ks	=	0.00015	m	hydraulic pipeline roughness (m)
v	=	1.14E-06	m2/s	kinematic viscosity of fluid (m2/s)
s	=	0.08		hydraulic gradient
Pipe area	=	0.283	m2	
10% reduction of flow area	=	0.254	m2	
Therefore, design V of pipe capacity	=	8.035	m/s	
Capacity of Existing 600mm dia pipe	=	0.8*V*A		(0.8 factor is adopted for sedimentation)
	=	1.82	m3/s	
	=	109046.1	lit/min	(1 m3 = 1000 lit and 1 min = 60s)
	>	49732	lit/min	OK

(Table 5, from DSD Sewerage Manual, concrete pipe)

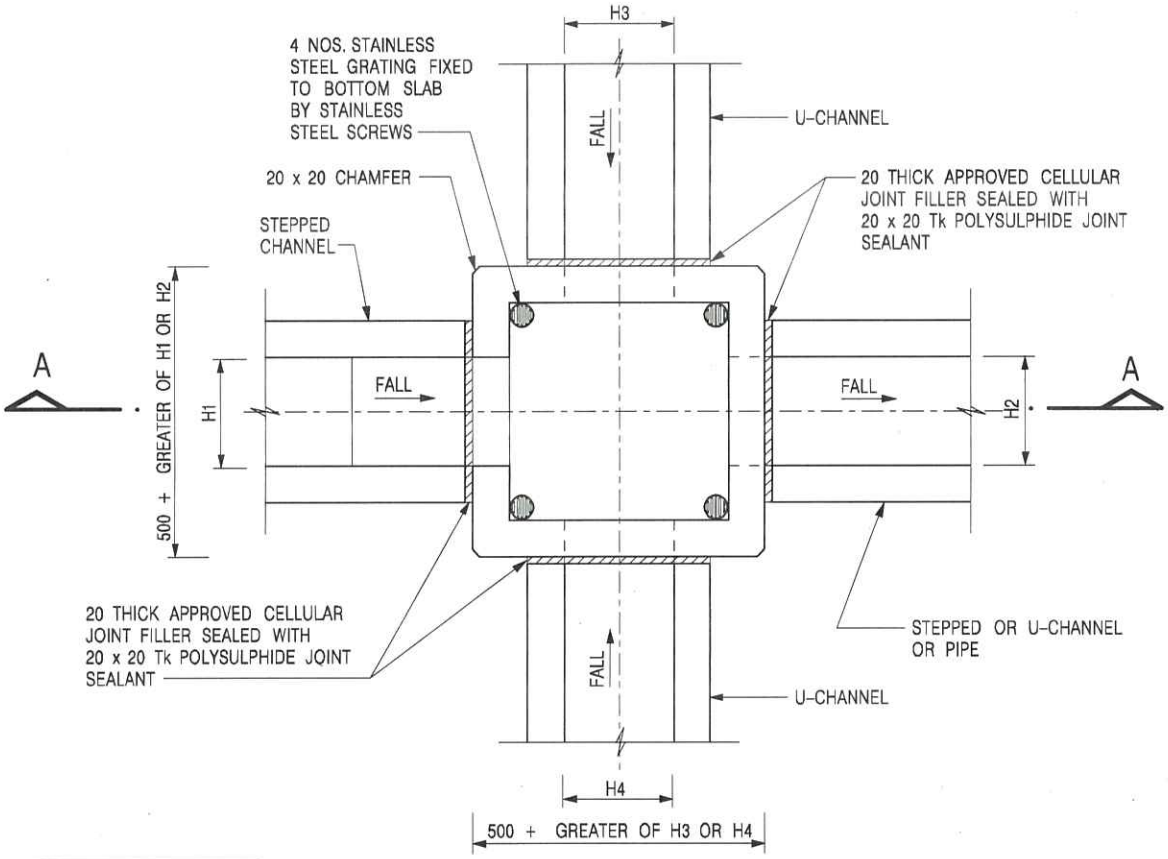

PLAN

NOMINAL SIZE (LARGEST OF H1, H2, H3 & H4)	B
300 – 600	150
675 – 900	175

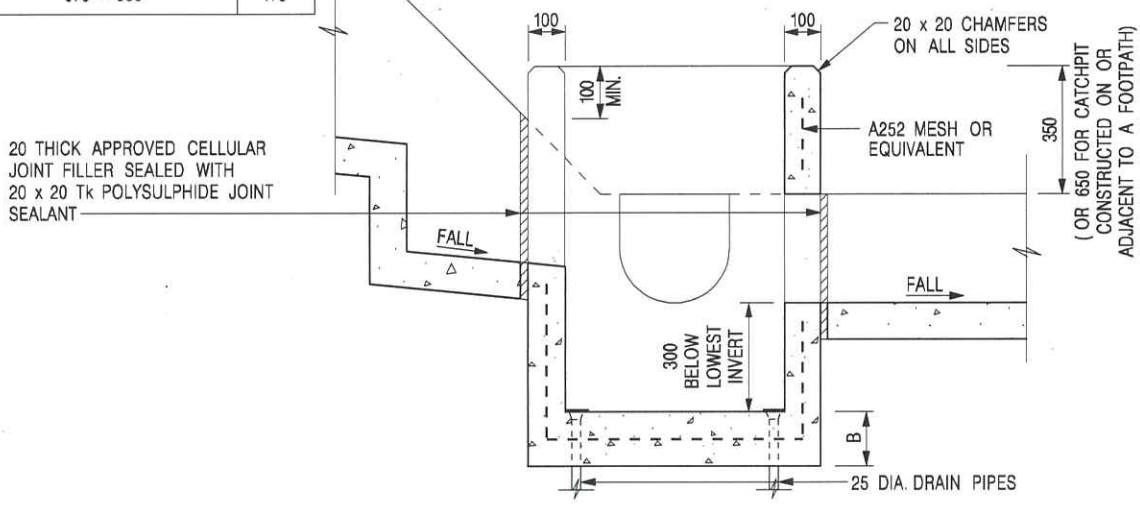

SECTION A – A

NOTES:

1. ALL DIMENSIONS ARE IN MILLIMETRES.
2. REFER TO SHEET 2 FOR OTHER NOTES.

REF.	REVISION	SIGNATURE	DATE
–	FORMER DRG. NO. C2406J.	Original Signed	03.2015

CATCHPIT WITH TRAP

(SHEET 1 OF 2)

CEDD CIVIL ENGINEERING AND DEVELOPMENT DEPARTMENT

SCALE 1 : 20

DATE JAN 1991

DRAWING NO. C2406 /1

卓越工程 建設香港

We Engineer Hong Kong's Development

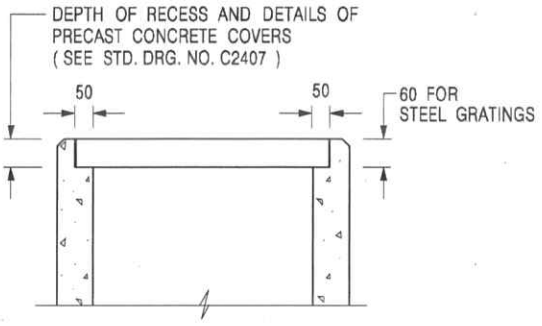

ALTERNATIVE TOP SECTION FOR PRECAST CONCRETE COVERS / GRATINGS

NOTES:

1. ALL DIMENSIONS ARE IN MILLIMETRES.
2. ALL CONCRETE SHALL BE GRADE 20 /20.
3. CONCRETE SURFACE FINISH SHALL BE CLASS U2 OR F2 AS APPROPRIATE.
4. FOR DETAILS OF JOINT, REFER TO STD. DRG. NO. C2413.
5. CONCRETE TO BE COLOURED AS SPECIFIED.
6. UNLESS REQUESTED BY THE MAINTENANCE PARTY AND AS DIRECTED BY THE ENGINEER, CATCHPIT WITH TRAP IS NORMALLY NOT PREFERRED DUE TO PONDING PROBLEM.
7. UPON THE REQUEST FROM MAINTENANCE PARTY, DRAIN PIPES AT CATCHPIT BASE CAN BE USED BUT THIS IS FOR CATCHPITS LOCATED AT SLOPE TOE ONLY AND AS DIRECTED BY THE ENGINEER.
8. FOR CATCHPITS CONSTRUCTED ON OR ADJACENT TO A FOOTPATH, STEEL GRATINGS (SEE DETAIL 'A' ON STD. DRG. NO. C2405) OR CONCRETE COVERS (SEE STD. DRG. NO. C2407) SHALL BE PROVIDED AS DIRECTED BY THE ENGINEER.
9. IF INSTRUCTED BY THE ENGINEER, HANDRAILING (SEE DETAIL 'G' ON STD. DRG. NO. C2405; EXCEPT ON THE UPSLOPE SIDE) IN LIEU OF STEEL GRATINGS OR CONCRETE COVERS CAN BE ACCEPTED AS AN ALTERNATIVE SAFETY MEASURE FOR CATCHPITS NOT ON A FOOTPATH NOR ADJACENT TO IT. TOP OF THE HANDRAILING SHALL BE 1 000 mm MIN. MEASURED FROM THE ADJACENT GROUND LEVEL.
10. MINIMUM INTERNAL CATCHPIT WIDTH SHALL BE 1 000 mm FOR CATCHPITS WITH A HEIGHT EXCEEDING 1 000 mm MEASURED FROM THE INVERT LEVEL TO THE ADJACENT GROUND LEVEL. AND, STEP IRONS (SEE DSD STD. DRG. NO. DS1043) AT 300 c/c STAGGERED SHALL BE PROVIDED. THICKNESS OF CATCHPIT WALL FOR INSTALLATION OF STEP IRONS SHALL BE INCREASED TO 150 mm.
11. FOR RETROFITTING AN EXISTING CATCHPIT WITH STEEL GRATING, SEE DETAIL 'F' ON STD. DRG. NO. C2405.
12. SUBJECT TO THE APPROVAL OF THE ENGINEER, OTHER MATERIALS CAN ALSO BE USED AS COVERS / GRATINGS.

REF.	REVISION	SIGNATURE	DATE
–	FORMER DRG. NO. C2406J.	Original Signed	03.2015

CATCHPIT WITH TRAP

(SHEET 2 OF 2)

CEDD CIVIL ENGINEERING AND DEVELOPMENT DEPARTMENT

SCALE 1 : 20

DATE JAN 1991

DRAWING NO. C2406 /2

卓越工程 建設香港

We Engineer Hong Kong's Development

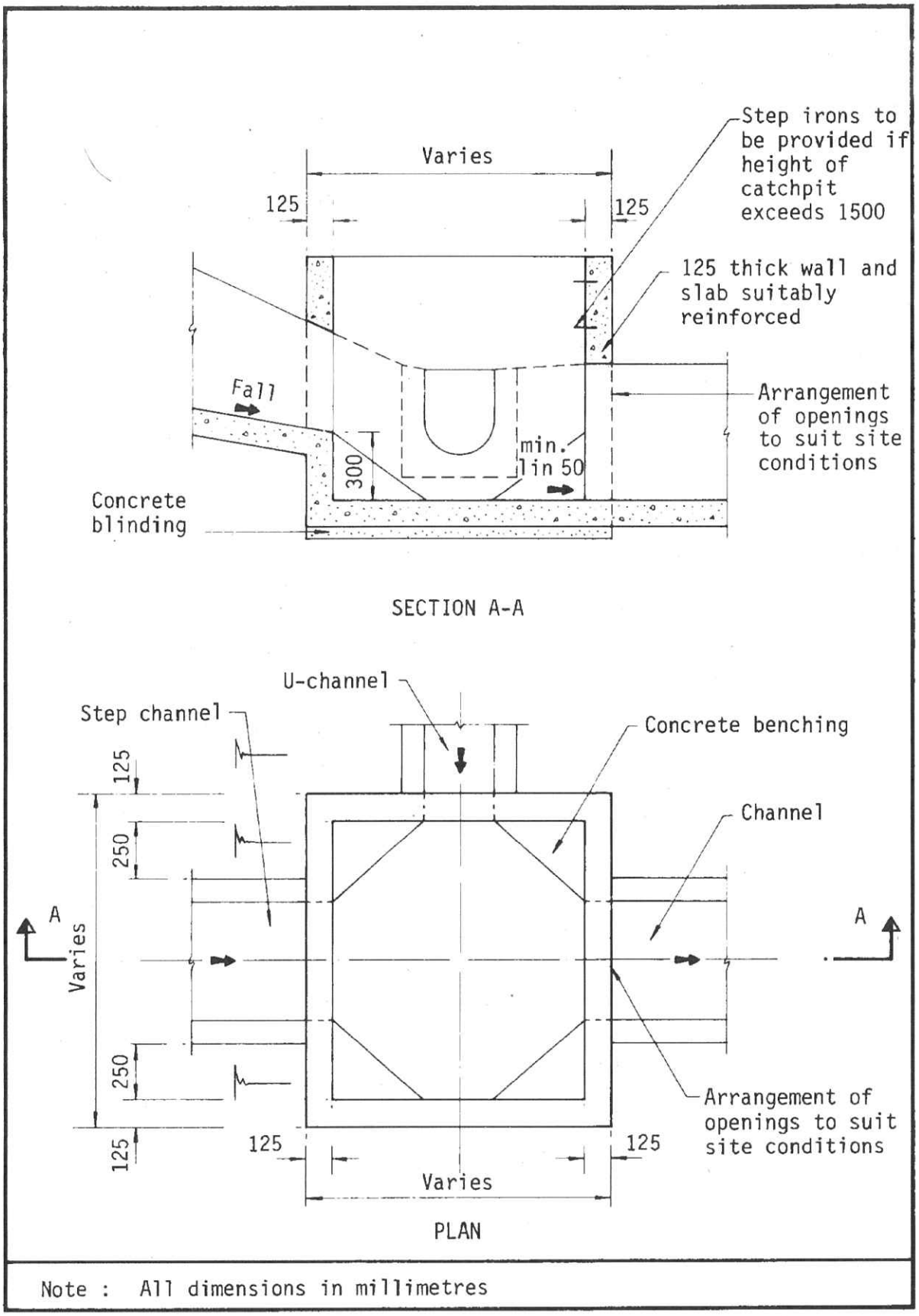

Note : All dimensions in millimetres

Figure 8.10 - Typical Details of Catchpits

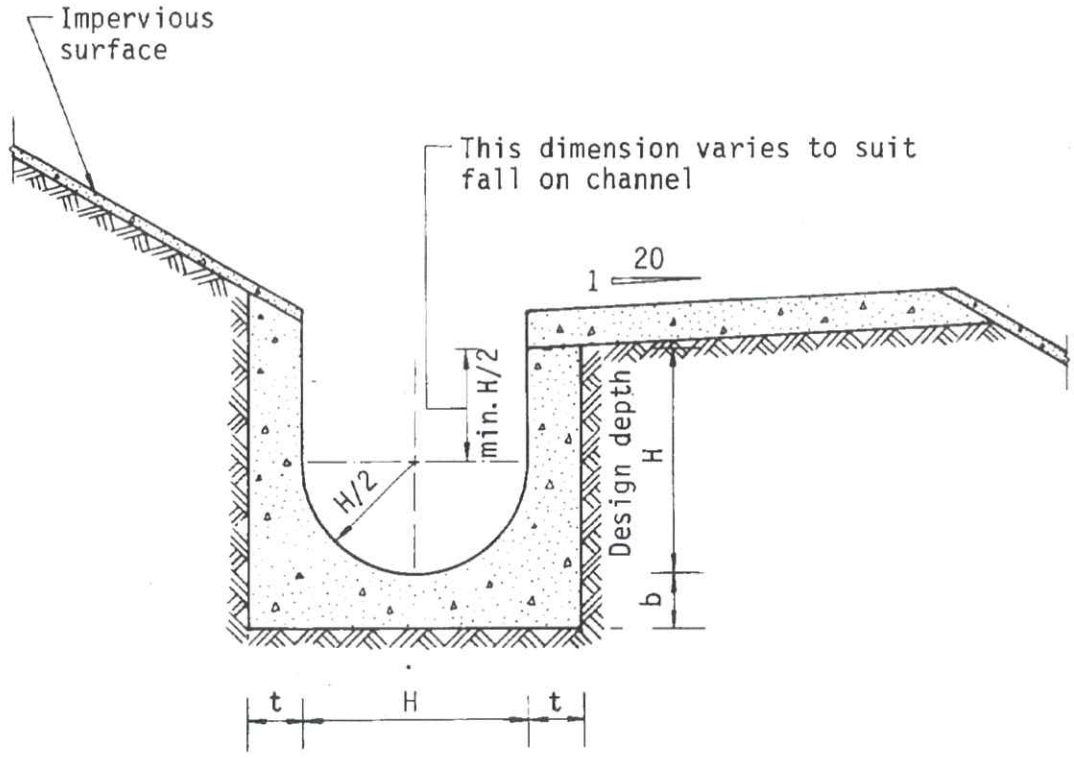

Dimensions of U - channel

Nominal size of channel H (mm)	Thickness t (mm)	Thickness b (mm)
225 to 600	150	150
675 to 1200	175	225

Figure 8.11 - Typical U-channel Details

Previous s.16 Applications covering the Application Site (the Site)

Approved Applications

	Application No.	Use/Development	Date of Consideration
1.	A/YL-KTN/649	Proposed Temporary Place of Recreation, Sports or Culture (Hobby Farm) for a Period of 5 Years	16.8.2019 [revoked on 16.5.2023]
2.	A/YL-KTN/844	Temporary Place of Recreation, Sports or Culture (Hobby Farm and Prawning Ground), Barbecue Site and Holiday Camp with Ancillary Facilities for a Period of 3 Years and Filling of Land	12.8.2022 [revoked on 12.5.2024]

Rejected Application

	Application No.	Use/Development	Date of Consideration
1.	A/YL-KTN/394	Proposed Temporary Field Study/Education Centre and Hobby Farm for a Period of 5 Years	14.6.2013 [on review]

Rejection Reasons

(1) The site is the subject of unauthorized land filling.

(2) There was no detailed information provided regarding the design and operation of the proposed use.

(3) The applicant failed to demonstrate that the proposed use would not generate adverse landscape and drainage impacts on the surrounding areas.

(4) Approving the application would set an undesirable precedent for similar applications.

Similar s.16 Applications within/straddle the Same "Agriculture" Zone on the OZP in the Vicinity of the Site in the Past Five Years

Approved Applications

	Application No.	Use/Development	Date of Consideration
1.	A/YL-KTN/693	Proposed Temporary Place of Recreation, Sports or Culture (Hobby Farm) and Caravan Holiday Camp) for a Period of 3 Years and Filling of Land	15.5.2020 [revoked on 15.6.2022]
2.	A/YL-KTN/705	Proposed Temporary Place of Recreation, Sports or Culture (Hobby Farm) for a Period of 3 Years	15.5.2020 [revoked on 15.11.2021]
3.	A/YL-KTN/745	Proposed Temporary Place of Recreation, Sports or Culture (Hobby Farm) for a Period of 5 Years and Filling of Land	5.2.2021 [revoked on 5.2.2022]
4.	A/YL-KTN/758	Proposed Temporary Place of Recreation, Sports or Culture (Hobby Farm) for a Period of 3 Years .	30.4.2021 [revoked on 30.9.2023]
5.	A/YL-KTN/766	Proposed Temporary Place of Recreation, Sports or Culture (Hobby Farm) for a Period of 3 Years	11.6.2021 [revoked on 11.9.2022]
6.	A/YL-KTN/772	Temporary Place of Recreation, Sports or Culture (Hobby Farm) and Caravan Holiday Camp with Ancillary Canteen for a Period of 3 Years	9.7.2021 [revoked on 9.7.2022]
7.	A/YL-KTN/782	Proposed Temporary Place of Recreation, Sports or Culture (Hobby Farm) for a Period of 3 Years and Filling of Land	10.9.2021 [revoked on 10.6.2023]
8.	A/YL-KTN/802	Proposed Temporary Place of Recreation, Sports or Culture (Hobby Farm) for a Period of 5 Years and Filling of Land	6.5.2022 [revoked on 6.8.2022]
9.	A/YL-KTN/806	Proposed Temporary Place of Recreation, Sports or Culture (Hobby Farm) for a Period of 5 Years and Filling of Land	20.5.2022 [revoked on 20.2.2025]
10.	A/YL-KTN/817	Temporary Caravan Holiday Camp and Barbecue Site with Ancillary Canteen for a Period of 3 Years and Filling of Land	4.3.2022 [revoked on 4.9.2023]
11.	A/YL-KTN/829	Temporary Holiday Camp with Ancillary Facilities for a Period of 3 Years and Filling of Land	9.9.2022 [revoked on 9.6.2024]
12.	A/YL-KTN/830	Renewal of Planning Approval for Temporary Place of Recreation (including Picnic Area, Children Playground and Handicraft Making Area) and Barbecue Site with Ancillary Facilities for a Period of 3 Years	10.6.2022
13.	A/YL-KTN/833	Proposed Temporary Holiday Camp with Ancillary Facilities for a Period of 3 Years and Filling of Land	10.6.2022 [revoked on 10.12.2022]

	Application No.	Use/Development	Date of Consideration
14.	A/YL-KTN/838	Proposed Temporary Place of Recreation, Sports or Culture (Hobby Farm) and Holiday Camp with Ancillary Facilities for a Period of 3 Years and Filling of Land	11.11.2022 [revoked on 11.5.2024]
15.	A/YL-KTN/850	Proposed Temporary Holiday Camp with Ancillary Facilities for a Period of 3 Years	9.9.2022 [revoked on 9.3.2024]
16.	A/YL-KTN/853	Proposed Temporary Place of Recreation, Sports or Culture (Hobby Farm) for a Period of 5 Years and Filling of Land	13.1.2023 [revoked on 13.10.2024]
17.	A/YL-KTN/859	Temporary Holiday Camp and Barbecue Site with Ancillary Eating Place and Facilities for a Period of 3 Years and Filling of Land	28.10.2022 [revoked on 28.4.2024]
18.	A/YL-KTN/868	Proposed Temporary Holiday Camp with Ancillary Facilities for a Period of 3 Years	13.1.2023 [revoked on 13.7.2024]
19.	A/YL-KTN/894	Temporary Place of Recreation, Sports or Culture (Indoor and Outdoor Recreation Centre) with Ancillary Facilities for a Period of 3 Years and Filling of Land	31.3.2023 [revoked on 30.12.2024]
20.	A/YL-KTN/911	Proposed Temporary Holiday Camp with Ancillary Facilities for a Period of 3 Years and Filling of Land	25.8.2023 [revoked on 25.2.2024]
21.	A/YL-KTN/1044	Temporary Holiday Camp, Place of Recreation, Sports or Culture, Barbecue Site and Eating Place for a Period of Three Years and Associated Filling of Land	4.10.2024

Government Departments' General Comments

1. Environment

Comments of the Director of Environmental Protection:

- no objection to the application from environmental planning perspective;
- there was a substantiated complaint concerning the application site (the Site) on air, noise and light nuisances in the past three years; and
- advisory comments are at **Appendix IV**.

2. Traffic

Comments of the Commissioner for Transport:

- no adverse comment on the application from traffic engineering perspective; and
- advisory comments are at **Appendix IV**.

Comments of the Chief Highway Engineer/New Territories West, Highways Department (HyD):

- no adverse comment on the application from highways maintenance perspective; and
- advisory comments are at **Appendix IV**.

3. Railway Development

Comments of the Commissioner for Northern Metropolis Railways, HyD:

- no adverse comment on application from Northern Link (NOL) Main Line project perspective noting that the current application would adopt Chi Ho Road as the access instead of Shui Mei Road and no adverse impact is anticipated on the construction access of NOL Main Line; and
- the Site is approximately 360m away from the gazetted railway scheme boundary of NOL Main Line;

4. Drainage

Comments of the Chief Engineer/Mainland North, Drainage Services Department:

- no in-principle objection to the application from public drainage point of view;
- the submitted drainage proposal is considered acceptable;
- should the application be approved, conditions should be stipulated requiring the implementation and maintenance of the accepted drainage proposal for the

development to the satisfaction of the Director of Drainage Services or of the Town Planning Board; and

- advisory comments are at **Appendix IV**.

5. **Fire Safety**

Comments of the Director of Fire Services:

- no in-principle objection to the application subject to the fire service installations (FSIs) being provided to his satisfaction;
- the submitted FSIs proposal is considered acceptable; and
- advisory comments are at **Appendix IV**.

6. **Landscape**

Comments of the Chief Town Planner/Urban Design and Landscape, Planning Department:

- no objection from landscape planning perspective;
- based on the aerial photo, the Site is located in a rural inland plains landscape character comprising vacant land, farmland, open storage areas, temporary structures, village houses, ponds and scattered tree groups. The applied use is not incompatible with the surrounding landscape setting of the area; and
- based on the site photos, the Site is fenced-off and partly hard paved. Some temporary structures are found within the Site. Some existing tree of common species are observed within the Site. According to the applicant and the layout plan on **Drawing A-1**, the applied layout is not in conflict with the existing trees and no tree felling is involved. Significant adverse landscape impact arising from the applied use is not anticipated.

7. **District Officer's Comments**

Comments of the District Officer (Yuen Long), Home Affairs Department:

- his office has not received any local's comment on the application.

8. **Other Departments**

The following government departments have no objection to/no comment on the application and their advisory comments, if any, are at **Appendix IV**:

- Project Manager (West), Civil Engineering and Development Department;
- Chief Engineer/Construction, Water Supplies Department;
- Director of Electrical and Mechanical Services;

- Director of Food and Environmental Hygiene; and
- Chief Building Surveyor/New Territories West, Buildings Department.

Recommended Advisory Clauses

(a) failure to reinstate the application site (the Site) as required under the relevant approval condition upon expiry of the planning permission might constitute an unauthorized development under the Town Planning Ordinance and be subject to enforcement and prosecution actions;

(b) the permission is given to the development and structures under application. It does not condone any other development or structures which currently occur on the Site but not covered by the application. Immediate action should be taken to discontinue such development or remove such structures not covered by the permission;

(c) should the applicant fail to comply with any of the approval conditions again resulting in revocation of the planning permission, sympathetic consideration would not be given by the Rural and New Town Planning Committee or the Town Planning Board to any further application;

(d) to resolve any land issues relating to the applied use with the concerned owner(s);

(e) to note the comments of the District Lands Officer/Yuen Long, Lands Department (LandsD) that:

- there is/are unauthorised structure(s) and uses on Lot Nos. 1750A5 RP and 1750A6 RP in D.D. 107. The lot owner(s) should immediately rectify/apply for regularisation on the lease breaches and his office reserves the rights to take necessary lease enforcement action against the breaches without further notice; and

- the Short Term Waiver (STW) holder(s) will need to apply to his office for modification of the STW conditions where appropriate and the lot owner(s) shall apply to his office for a STW to permit the structure(s) erected within Lot Nos. 1750A5 RP and 1750A6 RP in D.D. 107. The application(s) for STW will be considered by the Government in its capacity as a landlord and there is no guarantee that it will be approved. The STW, if approved, will be subject to such terms and conditions including the payment of waiver fee and administrative fee as considered appropriate by LandsD. Besides, given the applied use is temporary in nature, only erection of temporary structure(s) will be considered;

(f) to note the comments of the Commissioner for Transport that:

- the Site is connected to the public road network via a section of a local access road which is not managed by the Transport Department. The land status of the local access road should be checked with the LandsD. Moreover, the management and maintenance responsibilities of the local access road should be clarified with the relevant lands and maintenance authorities accordingly. Sufficient manoeuvring space shall be provided within the Site. No vehicle is allowed to queue back to or reverse onto/from public road at any time during the planning approval period;

(g) to note the comments of the Chief Highway Engineer/New Territories West, Highways Department (HyD) that:

- HyD shall not be responsible for the maintenance of proposed access connecting the Site and Chi Ho Road; and
- adequate drainage measures shall be provided to prevent surface water running from the Site to the nearby public roads and drains;

(h) to note the comments of the Director of Environmental Protection that:

- the applicant is advised to:

  i. follow the relevant mitigation measures and requirements in the revised 'Code of Practice on Handling the Environmental Aspects of Temporary Uses and Open Storage Sites' to minimise any potential environmental nuisance;

  ii. not to use public announcement system or any form of audio amplification system at the Site;

  iii. provide adequate supporting infrastructure/facilities for proper collection, treatment and disposal of waste/wastewater generated from the applied use. If septic tank and soakaway system will be used in case of unavailability of public sewer, its design and construction shall follow the requirements of the Environmental Protection Department (EPD)'s Practice Note for Professional Person (ProPECC) PN 1/23 "Drainage Plans subject to Comment by the EPD" including completion of percolation test and certification by Authorized Person; and

  iv. meet the statutory requirements under relevant environmental legislation;

(i) to note the comments of the Chief Engineer/Mainland North, Drainage Services Department that:

- the applicant should implement the drainage facilities on Site in accordance with the agreed drainage proposal;
- the applicant is required to rectify the drainage system if they are found to be inadequate or ineffective during operation. The applicant shall also be liable for and shall indemnify claims and demands arising out of damage or nuisance caused by a failure of the drainage system;
- the applied use would neither obstruct overland flow nor adversely affected any existing natural streams, village drains, ditches and the adjacent areas; and
- the applicant(s) shall resolve any conflict/disagreement with relevant lot owner(s) and seek LandsD's permission for laying new drains/channels and/or modifying/upgrading existing ones in other private lots or on Government land (where required) outside the Site;

(j) to note the comments of the Director of Food and Environmental Hygiene (DFEH) that:

- no Food and Environmental Hygiene Department's (FEHD) facilities will be affected;

- proper licence/permit issued by FEHD is required if there is any food business/catering service/activities regulated by the DFEH under the Public Health and Municipal Services Ordinance (Cap. 132) and other relevant legislation for the public:

  i. under the Food Business Regulation, Cap. 132X, a food business licence is required for the operation of the relevant type of food business listed in the Regulation. For any premises intended to be used for food business (e.g. a restaurant, a food factory, a fresh provision shop), a food business licence from FEHD in accordance with the Public Health and Municipal Services Ordinance (Cap. 132) shall be obtained. The application for licence, if acceptable by FEHD, will be referred to relevant government departments such as the Buildings Department (BD), Fire Services Department and Planning Department for comment. If there is no objection from the departments concerned, a letter of requirements will be issued to the applicant for compliance and the licence will be issued upon compliance of all the requirements;

  ii. depending on the mode of operation, generally there are several types of food business licence that the operator of an outdoor barbecue site may apply for under the Food Business Regulation:

    1. if food is sold to customers for consumption on the premises, a restaurant licence should be obtained;

    2. if food is only prepared for sale for consumption off the premises, a food factory licence should be obtained; and

    3. if fresh, chilled or frozen beef, mutton, pork, reptiles (including live snake), fish (including live fish) and poultry is sold, a fresh provision shop licence should be obtained;

- when a restaurant licensee/licence applicant wishes to use any outside seating accommodation (OSA) outside the restaurant premises for alfresco dining, he/she should take notice of the main licensing criteria for OSA, covering matters such as legal right to use the land concerned, planning, building safety, fire safety, and traffic requirements, etc. as well as to obtain approval from DFEH before commencement. Restaurateurs operating OSA business without approval may be subject to prosecution pursuant to the Food Business Regulation (Cap. 132X). Repeated convictions may lead to suspension or cancellation of their licences;

- in accordance with Section 4 of Food Business Regulation, Cap. 132X, the expression "food business" means, any trade or business for the purpose of which any person engages in the handling of food or food is sold by means of a vending machine. But it does not include any canteen in work place (other than a factory canteen referred to in section 31) for the use exclusively of the persons employed in the work place. As such, a staff canteen that exclusively use by the staff members of that working place does not require a food business licence from his department. However, if the said canteen provided foods to the outsiders with payment, a food business licence is required.

- the operation of the eating place must not cause any environmental nuisance to the

surrounding. The refuse generated by the proposed eating place are regarded as trade refuse. The management or owner of the Site is responsible for its removal and disposal at their expenses. The operation of any business should not cause any obstruction or environmental nuisance in the vicinity;

- proper licence issued by FEHD is required if related place of entertainment is involved. Any person who desires to keep or use any place of public entertainment for example a theatre and cinema or a place, building, erection or structure, whether temporary or permanent, on one occasion or more, capable of accommodating the public presenting or carrying on public entertainment within Places of Public Entertainment Ordinance (Cap. 172) and its subsidiary legislation, such as a concert, opera, ballet, stage performance or other musical, dramatic or theatrical entertainment, cinematograph or laser projection display or an amusement ride and mechanical device which is designed for amusement, a Place of Public Entertainment Licence (or Temporary Place of Public Entertainment Licence) should be obtained from FEHD whatever the general public is admitted with or without payment; and

- there should be no encroachment on the public place and no environmental nuisance should be generated to the surroundings. Its state should not be a nuisance or injurious or dangerous to health and surrounding environment. Also, for any waste generated from such activities/operation, the applicant should arrange disposal properly at their own expenses;

(k) to note the comments of the Director of Electrical and Mechanical Services that:

- in the interests of public safety and ensuring the continuity of electricity supply, the parties concerned with planning, designing, organizing and supervising any activity near the underground cable or overhead line under the mentioned document should approach the electricity supplier (i.e. CLP Power) for the requisition of cable plans (and overhead line alignment drawings, where applicable) to find out whether there is any underground cable and/or overhead line within and/or in the vicinity of the Site. They should also be reminded to observe the Electricity Supply Lines (Protection) Regulation and the "Code of Practice on Working near Electricity Supply Lines" established under the Regulation when carrying out works in the vicinity of the electricity supply lines;

(l) to note the comments of the Director of Fire Services that:

- if the proposed structures are required to comply with the Buildings Ordinance (BO) (Cap.123), detailed fire services requirements will be formulated upon receipt of formal submission of general building plans;

(m) to note the comments of the Chief Building Surveyor/New Territories West, BD that:

- it is noted that 24 structures are proposed in the application. Before any new building works (including containers / open sheds as temporary buildings, demolition and land filling, etc.) are to be carried out on the Site, prior approval and consent of the Building Authority (BA) should be obtained, otherwise they are unauthorized building works (UBW) under the BO. An Authorized Person should be appointed as the co-ordinator for the proposed building works in accordance with the BO;

- the Site shall be provided with means of obtaining access thereto from a street and emergency vehicular access in accordance with Regulations 5 and 41D of the

Building (Planning) Regulations (B(P)R) respectively;

- the Site does not abut on a specified street of not less than 4.5m wide and its permitted development intensity shall be determined under Regulation 19(3) of the B(P)R at building plan submission stage;

- if the existing structures are erected on the leased land without the approval of the BA, they are UBW under the BO and should not be designated for any applied use under the application;

- for UBW erected on leased land, enforcement action may be taken by BD to effect their removal in accordance with the prevailing enforcement policy against UBW as and when necessary. The granting of any planning approval should not be construed as an acceptance of any existing building works or UBW on the Site under the BO;

- if the applied use under the application is subject to issue of a license, the applicant should be reminded that any existing structures on the Site intended to be used for such purposes are required to comply with the building safety and other relevant requirements as may be imposed by the licensing authority;

- any temporary shelters or converted containers for office, storage, washroom or other uses are considered as temporary buildings are subject to the control of Part VII of the B(P)R; and

- detailed checking under the BO will be carried out at building plan submission stage.

☐Urgent ☐Return receipt ☐Expand Group ☐Restricted ☐Prevent Copy

From: [redacted]
Sent: 2024-10-07 星期一 03:01:45
To: tpbpd/PLAND <tpbpd@pland.gov.hk>; Enquiry CEO/CEO <ceo@ceo.gov.hk>
Subject: A/YL-KTN/1049 DD 107 Pak Wai Tsuen TENT CITY

A/YL-KTN/1049

Lots 1750A4 RP (Part), 1750A5 RP (Part) and 1750A6 RP (Part) in D.D. 107, Pak Wai Tsuen, Kam Tin

Site area : About 9,375sq.m

Zoning : "Agriculture"

Applied use : Hobby Farm / Fishing and **Prawning** Ground / BBQ / 35 Tent Holiday Camp / **Filling of Land** / 22 Vehicle Parking

Dear TPB Members,

844 approved 12 Aug 2022 but conditions not fulfilled. Why was approval not revoked?

The Planning statement ADMITS THAT:

Table 1 – Details of Compliance with Approval Condition of the Previous Application
Approval Conditions of Application No. A/YL-KTN/844 Date of Compliance

(b) **The implementation of the accepted drainage proposal Not complied with**

(d) The submission of a fire service installations (FSIs) proposal 10/5/2023

(e) **The implementation of the FSIs proposal Not complied with**

So since 2019 this facility that includes a CHILDREN'S PLAYING AREA and is located beside a river has been allowed to operate with impunity.

This is shocking and indicates that the government depts who should make the safety and protection of the community, especially young children, a priority has displayed nothing short of malfeasance in allowing the operation to continue.

What does national security mean?

Originally conceived as protection against military attack, national security is widely understood to include also non-military dimensions, such as the security from terrorism, minimization of crime, economic security, energy security, **environmental security**, food security, and cyber-security.

☐Urgent ☐Return receipt ☐Expand Group ☐Restricted ☐Prevent Copy

It is high time that the CE investigate why failure to fulfil basic conditions is not only tolerated but encouraged via the recommendations of PlanD that approval for roll overs be granted and the failure of TPB board members appointed to ensure that land use is for the community benefit.

Mary Mulvihill

From: [redacted]
To: mm1947 <mm1947@netvigator.com>
Date: Saturday, 13 August 2022 2:31 AM HKT
Subject: Re: A/YL-KTN/844 DD 107 Pak Wai Tsuen TENT CITY

APPROVED 12/8/22
The Site is **currently used for the applied use without planning permission but PlanD supports application**

According to the applicant, the development involves the erection of 24 one-storey structures with building height ranging from about 2.8m to 5m and a total floor area of about 2,255m2
- rain shelter (189m2
- barbecue areas (635m2
- children playing area (446m2
- prawning ground (446m2
- covered car parking area (88m2
- reception and storage of tools (139m2
- activities rooms (46m2
- refreshment kiosks (232m2
- toilets (34m2
- tent camping area (about 1,921m2) can accommodate a maximum of 35 **tents**
- farming area (about 943m2 or 10% of the Site) serving as a hobby farm
- an artificial pond of about 100m2 , together with Structures B9 and B15
- about 4,122m2 (or 44% of the Site) has been **paved by concrete and bricks** by not more than 0.2m in depth (from about 3.9mPD to 4.1mPD and about 4.3mPD to 4.4mPD) for site formation of structures, vehicular circulation and children playing area. 18 private car parking spaces, and 1 loading/unloading space each for light goods vehicle and light bus are provided within the Site

---

From: [redacted]
To: tpbpd <tpbpd@pland.gov.hk>
Date: Monday, 25 July 2022 3:28 AM CST
Subject: A/YL-KTN/844 DD 107 Pak Wai Tsuen TENT CITY

A/YL-KTN/844

Lots 1750A4 RP (Part), 1750A5 RP (Part) and 1750A6 RP (Part) in D.D. 107, Pak Wai Tsuen, Kam Tin

Site area : About 9,375sq.m

Zoning : "Agriculture"

☐Urgent ☐Return receipt ☐Expand Group ☐Restricted ☐Prevent Copy

Applied use : Hobby Farm / **Pawning** Ground / BBQ / Holiday Camp / **Filling of Land** / 20 Vehicle Parking

WHAT IS PAWNING GROUND????

Dear TPB Members.

Strong objections.

A/YL-KTN/649 APPROVED 3 May 2019 CONDITIONS NEVER FULFILLED

This was to be a hobby farm with 5,1512sq.m under cultivation and a fish pond

Not only were conditions not fulfilled, Google Maps indicate that the site has been extensively excavated. In addition members should compare the layout plans as the combined excavation is almost the entire site. It says 2,219sq.m to be concrete over but on closer inspection the land filling is much greater.

Under the current application the Farm area is reduced 943sq.m, a mere 10% of the planning intention of the lots.

No information provided with regard to the planned number of tents/caravans, water supply, drainage, garbage disposal, etc etc.

Again PlanD will trot out the usual justification that '**it would not frustrate the long-term planning intention of the "AGR" zone'.**

It is deplorable that this falsehood is not only trotted out but accepted without question by members multiple times every month when Current studies suggest that soil sealing is **nearly irreversible**. Soil degradation can have disastrous effects such as landslides and floods, an increase in pollution, desertification and a decline in global food production.

Instead of approving the plan members should question why so many extensions of time have been granted. It is totally unacceptable that for a 3-year approval there would be 3-years of extensions.

Approval of the application will encourage further trashing of farmland that will leave Hong Kong with insufficient arable land to provide enough fresh produce to feed even the most vulnerable members of our society in times of crisis.

The ultimate intention is clearly Destroy to Build by rendering the entire site unfit for farm use and thus justifying the inevitable residential development plan to mature.

Mary Mulvihill

☐Urgent ☐Return receipt ☐Expand Group ☐Restricted ☐Prevent Copy

2

From: [redacted]
Sent: 2024-10-08 星期二 08:00:00
To: tpbpd/PLAND <tpbpd@pland.gov.hk>
Subject: Comments on the Section 16 Application No. A/YL-KTN/1049
Attachment: TPB20241008(KTN1049).pdf

Dear Sir/Madam,

Please refer to the attachment for the captioned.

Yours fairhfully,
Ng Hei Man (Mr.)
Campaign Manager
The Conservancy Association

Registered Name 註冊名稱 : The Conservancy Association 長春社
(Incorporated in Hong Kong with limited liability by guarantee 於香港註冊成立的擔保有限公司)

長春社 Since1968
The Conservancy Association

8th October 2024

Town Planning Board
15/F North Point Government Offices
333 Java Road
North Point
Hong Kong

By e-mail: tpbpd@pland.gov.hk

Dear Sir/Madam,

Comments on the Section 16 Application No. A/YL-KTN/1049

The Conservancy Association (CA) OBJECTS to the captioned application.

1. Not in line with the planning intention of Agriculture (AGR) zone

According to the approved Kam Tin North Outline Zoning Plan (OZP) No. S/YL-KTN/11, the planning intention of AGR zone "*is intended primarily to retain and safeguard good quality agricultural land/farm/fish ponds for agricultural purposes. It is also intended to retain fallow arable land with good potential for rehabilitation for cultivation and other agricultural purposes*". Most of the proposed uses are not related to agriculture while the area for hobby farm is very limited. We opine that this is not in line with the planning intention of AGR zone.

2. Adverse environmental impacts

We worry that there would be several potential adverse environmental impacts caused by the application:

- No plans on land recovery: Various structures/uses, children playing area, barbecue, shops and services, etc., would be temporarily proposed in the application site. However, no details are available to illustrate how the land would be recovered after the proposed temporary use.

- Sewage impacts: According to the application, we cannot see any details sewerage management, such as design; collection, treatment and disposal of sewage, and so on. We worry that if the above issues cannot be properly addressed, it may lead to serious environmental and hygiene problems within the application site and its surrounding area.

- Other sources of environmental impacts not clearly addressed: There are no site management and operational plans to describe issues such as number of expected visitors/users, crowd control, waste management, and so on. All these would help identify source of environmental impacts and then suggest measures to minimize or mitigate potential environmental disturbance, but we cannot see the project proponent has attempted to address this.

Yours faithfully,
The Conservancy Association

☐Urgent ☐Return receipt ☐Expand Group ☐Restricted ☐Prevent Copy

3

From: [redacted]
Sent: 2024-11-22 星期五 08:00:00
To: tpbpd/PLAND <tpbpd@pland.gov.hk>
Subject: Comments on the Section 16 Application No. A/YL-KTN/1049
Attachment: TPB20241122(KTN1049).pdf

Dear Sir/Madam,

Please refer to the attachment for the captioned.

Yours faithfully,
Ng Hei Man (Mr.)
Campaign Manager
The Conservancy Association

長春社 Since1968
The Conservancy Association

22nd November 2024

Town Planning Board
15/F North Point Government Offices
333 Java Road
North Point
Hong Kong

By e-mail: tpbpd@pland.gov.hk

Dear Sir/Madam,

Comments on the Section 16 Application No. A/YL-KTN/1049

The Conservancy Association (CA) OBJECTS to the captioned application.

1. Not in line with the planning intention of Agriculture (AGR) zone

According to the approved Kam Tin North Outline Zoning Plan (OZP) No. S/YL-KTN/11, the planning intention of AGR zone "*is intended primarily to retain and safeguard good quality agricultural land/farm/fish ponds for agricultural purposes. It is also intended to retain fallow arable land with good potential for rehabilitation for cultivation and other agricultural purposes*". Most of the proposed uses are not related to agriculture while the area for hobby farm is very limited. We opine that this is not in line with the planning intention of AGR zone.

2. Adverse environmental impacts

We worry that there would be several potential adverse environmental impacts caused by the application:

- No plans on land recovery: Various structures/uses, children playing area, barbecue, shops and services, etc., would be temporarily proposed in the application site. However, no details are available to illustrate how the land would be recovered after the proposed temporary use.

- Sewage impacts: According to the application, we cannot see any details sewerage management, such as design; collection, treatment and disposal of sewage, and so on. We worry that if the above issues cannot be properly addressed, it may lead to serious environmental and hygiene problems within the application site and its surrounding area.

- Other sources of environmental impacts not clearly addressed: There are no site management and operational plans to describe issues such as number of expected visitors/users, crowd control, waste management, and so on. All these would help identify source of environmental impacts and then suggest measures to minimize or mitigate potential environmental disturbance, but we cannot see the project proponent has attempted to address this.

Yours faithfully,
The Conservancy Association