此文件於 2023年 4月 26日 收到。城市規劃委員會
只會在收到所有必要的資料及文件後才正式確認收到
申請的日期。

This document is received on 26 APR 2023.
The Town Planning Board will formally acknowledge
the date of receipt of the application only upon receipt
of all the required information and documents.

**Form No. S16-III**
**表格第 S16-III 號**

# APPLICATION FOR PERMISSION UNDER SECTION 16 OF THE TOWN PLANNING ORDINANCE (CAP.131)

# 根據《城市規劃條例》(第131章)第16條遞交的許可申請

**Applicable to Proposal Only Involving Temporary Use/Development of Land and/or Building Not Exceeding 3 Years in Rural Areas or Renewal of Permission for such Temporary Use or Development***

**適用於祇涉及位於鄉郊地區土地上及/或建築物內進行為期不超過三年的臨時用途/發展或該等臨時用途/發展的許可續期的建議***

**Form No. S16-I should be used for other Temporary Use/Development of Land and/or Building (e.g. temporary use/developments in the Urban Area)and Renewal of Permission for such Temporary Use or Development.*

**其他土地上及/或建築物內的臨時用途/發展 (例如位於市區內的臨時用途或發展)及有關該等臨時用途/發展的許可續期，應使用表格第 S16-I 號。*

Applicant who would like to publish the notice of application in local newspapers to meet one of the Town Planning Board's requirements of taking reasonable steps to obtain consent of or give notification to the current land owner, please refer to the following link regarding publishing the notice in the designated newspapers: https://www.info.gov.hk/tpb/en/plan_application/apply.html

申請人如欲在本地報章刊登申請通知，以採取城市規劃委員會就取得現行土地擁有人的同意或通知現行土地擁有人所指定的其中一項合理步驟，請瀏覽以下網址有關在指定的報章刊登通知：https://www.info.gov.hk/tpb/tc/plan_application/apply.html

**General Note and Annotation for the Form**
**填寫表格的一般指引及註解**

# "Current land owner" means any person whose name is registered in the Land Registry as that of an owner of the land to which the application relates, as at 6 weeks before the application is made
「現行土地擁有人」指在提出申請前六星期，其姓名或名稱已在土地註冊處註冊為該申請所關乎的土地的擁有人的人

& Please attach documentary proof 請夾附證明文件

^ Please insert number where appropriate 請在適當地方註明編號

Please fill "NA" for inapplicable item 請在不適用的項目填寫「不適用」

Please use separate sheets if the space provided is insufficient 如所提供的空間不足，請另頁說明

Please insert a「✔」at the appropriate box 請在適當的方格內上加上「✔」號

| For Official Use Only 請勿填寫此欄 | Application No. 申請編號 | ST 646 |
|---|---|---|
| | Date Received 收到日期 | 20 [illegible] 2023 |

1. The completed form and supporting documents (if any) should be sent to the Secretary, Town Planning Board (the Board), 15/F, North Point Government Offices, 333 Java Road, North Point, Hong Kong.
申請人須把填妥的申請表格及其他支持申請的文件（倘有），送交香港北角渣華道 333 號北角政府合署 15 樓城市規劃委員會(下稱「委員會」)秘書收。

2. Please read the "Guidance Notes" carefully before you fill in this form. The document can be downloaded from the Board's website at http://www.info.gov.hk/tpb/. It can also be obtained from the Secretariat of the Board at 15/F, North Point Government Offices, 333 Java Road, North Point, Hong Kong (Tel: 2231 4810 or 2231 4835), and the Planning Enquiry Counters of the Planning Department (Hotline: 2231 5000) (17/F, North Point Government Offices, 333 Java Road, North Point, Hong Kong and 14/F, Sha Tin Government Offices, 1 Sheung Wo Che Road, Sha Tin, New Territories).
請先細閱《申請須知》的資料單張，然後填寫此表格。該份文件可從委員會的網頁下載（網址：http://www.info.gov.hk/tpb/)，亦可向委員會秘書處（香港北角渣華道 333 號北角政府合署 15 樓 – 電話：2231 4810 或 2231 4835)及規劃署的規劃資料查詢處(熱線：2231 5000) (香港北角渣華道 333 號北角政府合署 17 樓及新界沙田上禾輋路 1 號沙田政府合署 14 樓)索取。

3. This form can be downloaded from the Board's website, and obtained from the Secretariat of the Board and the Planning Enquiry Counters of the Planning Department. The form should be typed or completed in block letters. The processing of the application may be refused if the required information or the required copies are incomplete.
此表格可從委員會的網頁下載，亦可向委員會秘書處及規劃署的規劃資料查詢處索取。申請人須以打印方式或以正楷填寫表格。如果申請人所提交的資料或文件副本不齊全，委員會可拒絕處理有關申請。

## 1. Name of Applicant 申請人姓名/名稱

(☐ Mr. 先生 / ☐ Mrs. 夫人 / ☐ Miss 小姐 / ☐ Ms. 女士 / ☑ Company 公司 / ☐ Organisation 機構 )

Chuen Kee Transportation Company 泉記運輸公司

## 2. Name of Authorised Agent (if applicable) 獲授權代理人姓名/名稱（如適用）

(☐ Mr. 先生 / ☐ Mrs. 夫人 / ☐ Miss 小姐 / ☐ Ms. 女士 / ☑ Company 公司 / ☐ Organisation 機構 )

R-riches Property Consultants Limited 盈卓物業顧問有限公司

## 3. Application Site 申請地點

| | |
|---|---|
| (a) Full address / location / demarcation district and lot number (if applicable) 詳細地址／地點／丈量約份及地段號碼（如適用） | Lots 276 S.B RP, 277 S.B RP, 279 S.B RP (Part), 282 S.B RP, 283 S.B RP, 284, 285, 289, 321 RP (Part), 322, 323 and 324 in D.D. 99, Chau Tau, New Territories |
| (b) Site area and/or gross floor area involved 涉及的地盤面積及／或總樓面面積 | ☑Site area 地盤面積 4,242 sq.m 平方米 ☑About 約<br>☑Gross floor area 總樓面面積 3,562 sq.m 平方米 ☑About 約 |
| (c) Area of Government land included (if any) 所包括的政府土地面積（倘有） | NA sq.m 平方米 ☐About 約 |

| | |
|---|---|
| (d) Name and number of the related statutory plan(s)<br>有關法定圖則的名稱及編號 | Approved San Tin Outline Zoning Plan : S/YL-ST/8 |
| (e) Land use zone(s) involved<br>涉及的土地用途地帶 | "Green Belt" Zone |
| (f) Current use(s)<br>現時用途 | Vacant and occupied by temporary structures<br><br>(If there are any Government, institution or community facilities, please illustrate on plan and specify the use and gross floor area)<br>(如有任何政府、機構或社區設施，請在圖則上顯示，並註明用途及總樓面面積) |

## 4. "Current Land Owner" of Application Site 申請地點的「現行土地擁有人」

The applicant 申請人 –

☐ is the sole "current land owner"#& (please proceed to Part 6 and attach documentary proof of ownership).
是唯一的「現行土地擁有人」#& (請繼續填寫第 6 部分，並夾附業權證明文件)。

☐ is one of the "current land owners"#& (please attach documentary proof of ownership).
是其中一名「現行土地擁有人」#& (請夾附業權證明文件)。

☑ is not a "current land owner"#.
並不是「現行土地擁有人」#。

☐ The application site is entirely on Government land (please proceed to Part 6).
申請地點完全位於政府土地上（請繼續填寫第 6 部分）。

## 5. Statement on Owner's Consent/Notification
## 就土地擁有人的同意/通知土地擁有人的陳述

(a) According to the record(s) of the Land Registry as at ..... (DD/MM/YYYY), this application involves a total of ..... "current land owner(s)"#.
根據土地註冊處截至 ..... 年 ..... 月 ..... 日的記錄，這宗申請共牽涉 ..... 名「現行土地擁有人」#。

(b) The applicant 申請人 –

☐ has obtained consent(s) of ..... "current land owner(s)"#.
已取得 ..... 名「現行土地擁有人」#的同意。

| Details of consent of "current land owner(s)"# obtained 取得「現行土地擁有人」#同意的詳情 | | |
|---|---|---|
| No. of 'Current Land Owner(s)' 「現行土地擁有人」數目 | Lot number/address of premises as shown in the record of the Land Registry where consent(s) has/have been obtained<br>根據土地註冊處記錄已獲得同意的地段號碼／處所地址 | Date of consent obtained (DD/MM/YYYY)<br>取得同意的日期 (日/月/年) |
| | | |
| | | |
| | | |

(Please use separate sheets if the space of any box above is insufficient. 如上列任何方格的空間不足，請另頁說明)

has notified ..... "current land owner(s)"
已通知 ..... 名「現行土地擁有人」

| Details of the "current land owner(s)"# notified 已獲通知「現行土地擁有人」#的詳細資料 | | |
|---|---|---|
| No. of 'Current Land Owner(s)' 「現行土地擁有人」數目 | Lot number/address of premises as shown in the record of the Land Registry where notification(s) has/have been given 根據土地註冊處記錄已發出通知的地段號碼／處所地址 | Date of notification given (DD/MM/YYYY) 通知日期(日/月/年) |
| | | |
| | | |
| | | |

(Please use separate sheets if the space of any box above is insufficient. 如上列任何方格的空間不足，請另頁說明)

☑ has taken reasonable steps to obtain consent of or give notification to owner(s):
已採取合理步驟以取得土地擁有人的同意或向該人發給通知。詳情如下：

Reasonable Steps to Obtain Consent of Owner(s) 取得土地擁有人的同意所採取的合理步驟

☐ sent request for consent to the "current land owner(s)" on _____ (DD/MM/YYYY)#&
於_____(日/月/年)向每一名「現行土地擁有人」#郵遞要求同意書&

Reasonable Steps to Give Notification to Owner(s) 向土地擁有人發出通知所採取的合理步驟

☐ published notices in local newspapers on _____ (DD/MM/YYYY)&
於_____(日/月/年)在指定報章就申請刊登一次通知&

☑ posted notice in a prominent position on or near application site/premises on 21/4/2023 (DD/MM/YYYY)&
於_____(日/月/年)在申請地點／申請處所或附近的顯明位置貼出關於該申請的通知&

☑ sent notice to relevant owners' corporation(s)/owners' committee(s)/mutual aid committee(s)/management office(s) or rural committee on 21/4/2023 (DD/MM/YYYY)&
於_____(日/月/年)把通知寄往相關的業主立案法團/業主委員會/互助委員會或管理處，或有關的鄉事委員會&

Others 其他

☐ others (please specify)
其他（請指明）

_____

_____

_____

_____

Note: May insert more than one「✔」.
Information should be provided on the basis of each and every lot (if applicable) and premises (if any) in respect of the application.
註: 可在多於一個方格內加上「✔」號
申請人須就申請涉及的每一地段（倘適用）及處所（倘有）分別提供資料

## 6. Type(s) of Application 申請類別

**(A) Temporary Use/Development of Land and/or Building Not Exceeding 3 Years in Rural Areas**
**位於鄉郊地區土地上及/或建築物內進行為期不超過三年的臨時用途/發展**
**(For Renewal of Permission for Temporary Use or Development in Rural Areas, please proceed to Part (B))**
**(如屬位於鄉郊地區臨時用途/發展的規劃許可續期，請填寫(B)部分)**

| | |
|---|---|
| (a) Proposed use(s)/development 擬議用途/發展 | Proposed Temporary Warehouse (excluding Dangerous Goods Godown) with Ancillary Office and Canteen for a Period of 3 Years and Associated Filling of Land<br><br>(Please illustrate the details of the proposal on a layout plan) (請用平面圖說明擬議詳情) |
| (b) Effective period of permission applied for 申請的許可有效期 | ☑ year(s) 年 ....3.... <br>☐ month(s) 個月 .... |

(c) Development Schedule 發展細節表

| | | |
|---|---|---|
| Proposed uncovered land area 擬議露天土地面積 | 2,461 | sq.m ☑About 約 |
| Proposed covered land area 擬議有上蓋土地面積 | 1,781 | sq.m ☑About 約 |
| Proposed number of buildings/structures 擬議建築物／構築物數目 | 2 | |
| Proposed domestic floor area 擬議住用樓面面積 | / | sq.m ☐About 約 |
| Proposed non-domestic floor area 擬議非住用樓面面積 | 3,562 | sq.m ☑About 約 |
| Proposed gross floor area 擬議總樓面面積 | 3,562 | sq.m ☑About 約 |

Proposed height and use(s) of different floors of buildings/structures (if applicable) 建築物/構築物的擬議高度及不同樓層的擬議用途 (如適用) (Please use separate sheets if the space below is insufficient) (如以下空間不足，請另頁說明)

| STRUCTURE | | USE | COVERED AREA | GFA | BUILDING HEIGHT | |
|---|---|---|---|---|---|---|
| B1 | (G/F) | WAREHOUSE (EXCL. DANGEROUS GOODS GODOWN) | 1,673m² (ABOUT) | 1,673 m² (ABOUT) | 11 m (ABOUT)(2-STOREY) | |
| | (1/F) | WAREHOUSE (EXCL. DANGEROUS GOODS GODOWN) | | 1,673 m² (ABOUT) | | |
| B2 | (G/F) | ANCILLARY CANTEEN | 109 m² (ABOUT) | 109 m² (ABOUT) | 8 m (ABOUT)(2-STOREY) | |
| | (1/F) | ANCILLARY OFFICE | | 109 m² (ABOUT) | | |
| | | TOTAL | 1,781 m² (ABOUT) | 3,562 m² (ABOUT) | | |

Proposed number of car parking spaces by types 不同種類停車位的擬議數目

| | |
|---|---|
| Private Car Parking Spaces 私家車車位 | 4 |
| Motorcycle Parking Spaces 電單車車位 | |
| Light Goods Vehicle Parking Spaces 輕型貨車泊車位 | 3 |
| Medium Goods Vehicle Parking Spaces 中型貨車泊車位 | |
| Heavy Goods Vehicle Parking Spaces 重型貨車泊車位 | |
| Others (Please Specify) 其他 (請列明) | |

Proposed number of loading/unloading spaces 上落客貨車位的擬議數目

| | |
|---|---|
| Taxi Spaces 的士車位 | |
| Coach Spaces 旅遊巴車位 | |
| Light Goods Vehicle Spaces 輕型貨車車位 | 2 |
| Medium Goods Vehicle Spaces 中型貨車車位 | |
| Heavy Goods Vehicle Spaces 重型貨車車位 | |
| Others (Please Specify) 其他 (請列明) | 1 (Container Vehicle) |

Proposed operating hours 擬議營運時間
Monday to Saturday from 09:00 to 19:00, no operation on Sunday and public holiday

| | | |
|---|---|---|
| (d) Any vehicular access to the site/subject building? 是否有車路通往地盤／有關建築物？ | Yes 是 | ☑ There is an existing access. (please indicate the street name, where appropriate) 有一條現有車路。(請註明車路名稱(如適用)) Accessible from Lok Ma Chau Road via a local access<br>☐ There is a proposed access. (please illustrate on plan and specify the width) 有一條擬議車路。（請在圖則顯示，並註明車路的闊度） |
| | No 否 | ☐ |

(e) Impacts of Development Proposal 擬議發展計劃的影響
(If necessary, please use separate sheets to indicate the proposed measures to minimise possible adverse impacts or give justifications/reasons for not providing such measures. 如需要的話，請另頁註明可盡量減少可能出現不良影響的措施，否則請提供理據/理由。)

| | | |
|---|---|---|
| (i) Does the development proposal involve alteration of existing building? 擬議發展計劃是否包括現有建築物的改動? | Yes 是 | ☐ Please provide details 請提供詳情 |
| | No 否 | ☑ |
| (ii) Does the development proposal involve the operation on the right? 擬議發展是否涉及右列的工程? | Yes 是 | ☑ (Please indicate on site plan the boundary of concerned land/pond(s), and particulars of stream diversion, the extent of filling of land/pond(s) and/or excavation of land) (請用地盤平面圖顯示有關土地／池塘界線，以及河道改道、填塘、填土及／或挖土的細節及/或範圍)<br>☐ Diversion of stream 河道改道<br>☐ Filling of pond 填塘<br>Area of filling 填塘面積 ..... sq.m 平方米 ☐About 約<br>Depth of filling 填塘深度 ..... m 米 ☐About 約<br>☑ Filling of land 填土<br>Area of filling 填土面積 ....4,242 sq.m. sq.m 平方米 ☑About 約<br>Depth of filling 填土厚度 ..not more than 1.6... m 米 ☐About 約<br>☐ Excavation of land 挖土<br>Area of excavation 挖土面積..... sq.m 平方米 ☐About 約<br>Depth of excavation 挖土深度 .....m 米 ☐About 約 |
| | No 否 | ☐ |

| | | | |
|---|---|---|---|
| (iii) Would the development proposal cause any adverse impacts? 擬議發展計劃會否造成不良影響？ | On environment 對環境 | Yes 會 ☐ | No 不會 ☑ |
| | On traffic 對交通 | Yes 會 ☐ | No 不會 ☑ |
| | On water supply 對供水 | Yes 會 ☐ | No 不會 ☑ |
| | On drainage 對排水 | Yes 會 ☐ | No 不會 ☑ |
| | On slopes 對斜坡 | Yes 會 ☐ | No 不會 ☑ |
| | Affected by slopes 受斜坡影響 | Yes 會 ☐ | No 不會 ☑ |
| | Landscape Impact 構成景觀影響 | Yes 會 ☐ | No 不會 ☑ |
| | Tree Felling 砍伐樹木 | Yes 會 ☐ | No 不會 ☑ |
| | Visual Impact 構成視覺影響 | Yes 會 ☐ | No 不會 ☑ |
| | Others (Please Specify) 其他 (請列明) | Yes 會 ☐ | No 不會 ☑ |

| | |
|---|---|
| | Please state measure(s) to minimise the impact(s). For tree felling, please state the number, diameter at breast height and species of the affected trees (if possible)<br>請註明盡量減少影響的措施。如涉及砍伐樹木，請說明受影響樹木的數目、及胸高度的樹幹直徑及品種(倘可)<br>.....<br>.....<br>.....<br>.....<br>..... |

| **(B) Renewal of Permission for Temporary Use or Development in Rural Areas<br>位於鄉郊地區臨時用途/發展的許可續期** | |
|---|---|
| (a) Application number to which the permission relates<br>與許可有關的申請編號 | A/_____/_____ |
| (b) Date of approval<br>獲批給許可的日期 | ..... (DD 日/MM 月/YYYY 年) |
| (c) Date of expiry<br>許可屆滿日期 | ..... (DD 日/MM 月/YYYY 年) |
| (d) Approved use/development<br>已批給許可的用途／發展 | |
| (e) Approval conditions<br>附帶條件 | ☐ The permission does not have any approval condition<br>許可並沒有任何附帶條件<br>☐ Applicant has complied with all the approval conditions<br>申請人已履行全部附帶條件<br>☐ Applicant has not yet complied with the following approval condition(s):<br>申請人仍未履行下列附帶條件：<br>_____<br>_____<br>_____<br>Reason(s) for non-compliance:<br>仍未履行的原因：<br>_____<br>_____<br>_____<br>(Please use separate sheets if the space above is insufficient)<br>(如以上空間不足，請另頁說明) |
| (f) Renewal period sought<br>要求的續期期間 | ☐ year(s) 年 .....<br>☐ month(s) 個月 ..... |

## 7. Justifications 理由

The applicant is invited to provide justifications in support of the application. Use separate sheets if necessary.
現請申請人提供申請理由及支持其申請的資料。如有需要，請另頁說明。

Please refer to supplementary statement.

## 8. Declaration 聲明

I hereby declare that the particulars given in this application are correct and true to the best of my knowledge and belief.
本人謹此聲明，本人就這宗申請提交的資料，據本人所知及所信，均屬真實無誤。

I hereby grant a permission to the Board to copy all the materials submitted in this application and/or to upload such materials to the Board's website for browsing and downloading by the public free-of-charge at the Board's discretion.
本人現准許委員會酌情將本人就此申請所提交的所有資料複製及/或上載至委員會網站，供公眾免費瀏覽或下載。

Signature 簽署 ☐ Applicant 申請人 / ☑ Authorised Agent 獲授權代理人

Michael WONG

Name in Block Letters 姓名（請以正楷填寫）

Position (if applicable) 職位 （如適用）

Professional Qualification(s) 專業資格 ☐ Member 會員 / ☐ Fellow of 資深會員
☐ HKIP 香港規劃師學會 / ☐ HKIA 香港建築師學會 /
☐ HKIS 香港測量師學會 / ☐ HKIE 香港工程師學會 /
☐ HKILA 香港園境師學會/ ☐ HKIUD 香港城市設計學會
☐ RPP 註冊專業規劃師
Others 其他 .....

on behalf of 代表 R-Riches Property Consultants Limited

☑ Company 公司 / ☐ Organisation Name and Chop (if applicable) 機構名稱及蓋章（如適用）

Date 日期 21/4/2023 (DD/MM/YYYY 日/月/年)

### Remark 備註

The materials submitted in this application and the Board's decision on the application would be disclosed to the public. Such materials would also be uploaded to the Board's website for browsing and free downloading by the public where the Board considers appropriate.
委員會會向公眾披露申請人所遞交的申請資料和委員會對申請所作的決定。在委員會認為合適的情況下，有關申請資料亦會上載至委員會網頁供公眾免費瀏覽及下載。

### Warning 警告

Any person who knowingly or wilfully makes any statement or furnish any information in connection with this application, which is false in any material particular, shall be liable to an offence under the Crimes Ordinance.
任何人在明知或故意的情況下，就這宗申請提出在任何要項上是虛假的陳述或資料，即屬違反《刑事罪行條例》。

### Statement on Personal Data 個人資料的聲明

1. The personal data submitted to the Board in this application will be used by the Secretary of the Board and Government departments for the following purposes:
委員會就這宗申請所收到的個人資料會交給委員會秘書及政府部門，以根據《城市規劃條例》及相關的城市規劃委員會規劃指引的規定作以下用途：
   (a) the processing of this application which includes making available the name of the applicant for public inspection when making available this application for public inspection; and
   處理這宗申請，包括公布這宗申請供公眾查閱，同時公布申請人的姓名供公眾查閱；以及
   (b) facilitating communication between the applicant and the Secretary of the Board/Government departments.
   方便申請人與委員會秘書及政府部門之間進行聯絡。

2. The personal data provided by the applicant in this application may also be disclosed to other persons for the purposes mentioned in paragraph 1 above.
申請人就這宗申請提供的個人資料，或亦會向其他人士披露，以作上述第 1 段提及的用途。

3. An applicant has a right of access and correction with respect to his/her personal data as provided under the Personal Data (Privacy) Ordinance (Cap. 486). Request for personal data access and correction should be addressed to the Secretary of the Board at 15/F, North Point Government Offices, 333 Java Road, North Point, Hong Kong.
根據《個人資料(私隱)條例》(第 486 章)的規定，申請人有權查閱及更正其個人資料。如欲查閱及更正個人資料，應向委員會秘書提出有關要求，其地址為香港北角渣華道 333 號北角政府合署 15 樓。

## Gist of Application 申請摘要

(Please provide details in both English and Chinese as far as possible. This part will be circulated to relevant consultees, uploaded to the Town Planning Board's Website for browsing and free downloading by the public and available at the Planning Enquiry Counters of the Planning Department for general information.)
(請盡量以英文及中文填寫。此部分將會發送予相關諮詢人士、上載至城市規劃委員會網頁供公眾免費瀏覽及下載及於規劃署規劃資料查詢處供一般參閱。)

| | |
|---|---|
| Application No.<br>申請編號 | (For Official Use Only) (請勿填寫此欄) |
| Location/address<br>位置／地址 | Lots 276 S.B RP, 277 S.B RP, 279 S.B RP (Part), 282 S.B RP, 283 S.B RP, 284, 285, 289, 321 RP (Part), 322, 323 and 324 in D.D. 99, Chau Tau, New Territories |
| Site area<br>地盤面積 | 4,242 sq. m 平方米 ☑ About 約<br>(includes Government land of 包括政府土地 sq. m 平方米 ☐ About 約) |
| Plan<br>圖則 | Approved San Tin Outline Zoning Plan No.: S/YL-ST/8 |
| Zoning<br>地帶 | "Green Belt" Zone |
| Type of Application<br>申請類別 | ☑ Temporary Use/Development in Rural Areas for a Period of<br>位於鄉郊地區的臨時用途/發展為期<br>☑ Year(s) 年 3 ☐ Month(s) 月 _____<br><br>☐ Renewal of Planning Approval for Temporary Use/Development in Rural Areas for a Period of<br>位於鄉郊地區臨時用途/發展的規劃許可續期為期<br>☐ Year(s) 年 _____ ☐ Month(s) 月 _____ |
| Applied use/ development<br>申請用途/發展 | Proposed Temporary Warehouse (excluding Dangerous Goods Godown) with Ancillary Office and Canteen for a Period of 3 Years and Associated Filling of Land |

| | | | | |
|---|---|---|---|---|
| (i) | Gross floor area and/or plot ratio 總樓面面積及／或地積比率 | | sq.m 平方米 | Plot Ratio 地積比率 |
| | | Domestic 住用 | / ☐ About 約 ☐ Not more than 不多於 | / ☐About 約 ☐Not more than 不多於 |
| | | Non-domestic 非住用 | 3,562 ☑ About 約 ☐ Not more than 不多於 | 0.84 ☑About 約 ☐Not more than 不多於 |
| (ii) | No. of block 幢數 | Domestic 住用 | / | |
| | | Non-domestic 非住用 | 2 | |
| (iii) | Building height/No. of storeys 建築物高度／層數 | Domestic 住用 | / m 米 ☐ (Not more than 不多於) | |
| | | | / Storeys(s) 層 ☐ (Not more than 不多於) | |
| | | Non-domestic 非住用 | 8 - 11 (about) m 米 ☐ (Not more than 不多於) | |
| | | | 2 Storeys(s) 層 ☑ (Not more than 不多於) | |
| (iv) | Site coverage 上蓋面積 | | 42 % ☑ About 約 | |
| (v) | No. of parking spaces and loading / unloading spaces 停車位及上落客貨車位數目 | Total no. of vehicle parking spaces 停車位總數 | 7 | |
| | | Private Car Parking Spaces 私家車車位 | | |
| | | Motorcycle Parking Spaces 電單車車位 | 4 (PC) | |
| | | Light Goods Vehicle Parking Spaces 輕型貨車泊車位 | 3 (LGV) | |
| | | Medium Goods Vehicle Parking Spaces 中型貨車泊車位 | | |
| | | Heavy Goods Vehicle Parking Spaces 重型貨車泊車位 | | |
| | | Others (Please Specify) 其他 (請列明) | | |
| | | Total no. of vehicle loading/unloading bays/lay-bys 上落客貨車位／停車處總數 | 3 | |
| | | Taxi Spaces 的士車位 | | |
| | | Coach Spaces 旅遊巴車位 | | |
| | | Light Goods Vehicle Spaces 輕型貨車車位 | 2 (LGV) | |
| | | Medium Goods Vehicle Spaces 中型貨車位 | | |
| | | Heavy Goods Vehicle Spaces 重型貨車車位 | | |
| | | Others (Please Specify) 其他 (請列明) | | |
| | | Container Vehicle | 1 (CV) | |

Submitted Plans, Drawings and Documents 提交的圖則、繪圖及文件

| | Chinese 中文 | English 英文 |
|---|---|---|
| **Plans and Drawings 圖則及繪圖** | | |
| Master layout plan(s)/Layout plan(s) 總綱發展藍圖／布局設計圖 | ☐ | ☑ |
| Block plan(s) 樓宇位置圖 | ☐ | ☐ |
| Floor plan(s) 樓宇平面圖 | ☐ | ☐ |
| Sectional plan(s) 截視圖 | ☐ | ☐ |
| Elevation(s) 立視圖 | ☐ | ☐ |
| Photomontage(s) showing the proposed development 顯示擬議發展的合成照片 | ☐ | ☐ |
| Master landscape plan(s)/Landscape plan(s) 園境設計總圖／園境設計圖 | ☐ | ☐ |
| Others (please specify) 其他（請註明） | ☐ | ☑ |
| Plan showing the zoning of the Site/Original Premises, Plan showing the land status of the Site/Original Premises, Location Plan of the Site/Original Premises, Plan showing the land filling area, Swept path analysis, Aerial Photo of the Site/Original Premises, Run-in/out of the Site, Plan showing the NDA Phasing of the Original Premises | | |
| **Reports 報告書** | | |
| Planning Statement/Justifications 規劃綱領/理據 | ☐ | ☑ |
| Environmental assessment (noise, air and/or water pollutions) 環境評估（噪音、空氣及／或水的污染） | ☐ | ☐ |
| Traffic impact assessment (on vehicles) 就車輛的交通影響評估 | ☐ | ☐ |
| Traffic impact assessment (on pedestrians) 就行人的交通影響評估 | ☐ | ☐ |
| Visual impact assessment 視覺影響評估 | ☐ | ☐ |
| Landscape impact assessment 景觀影響評估 | ☐ | ☐ |
| Tree Survey 樹木調查 | ☐ | ☐ |
| Geotechnical impact assessment 土力影響評估 | ☐ | ☐ |
| Drainage impact assessment 排水影響評估 | ☐ | ☐ |
| Sewerage impact assessment 排污影響評估 | ☐ | ☐ |
| Risk Assessment 風險評估 | ☐ | ☐ |
| Others (please specify) 其他（請註明） | ☐ | ☐ |
| Drainage Proposal, Fire service Installation Proposal | | |

Note: May insert more than one「✔」. 註：可在多於一個方格內加上「✔」號

Note: The information in the Gist of Application above is provided by the applicant for easy reference of the general public. Under no circumstances will the Town Planning Board accept any liabilities for the use of the information nor any inaccuracies or discrepancies of the information provided. In case of doubt, reference should always be made to the submission of the applicant.

註： 上述申請摘要的資料是由申請人提供以方便市民大眾參考。對於所載資料在使用上的問題及文義上的歧異，城市規劃委員會概不負責。若有任何疑問，應查閱申請人提交的文件。

SECTION 16 PLANNING APPLICATION

# PROPOSED TEMPORARY WAREHOUSE (EXCLUDING DANGEROUS GOODS GODOWN) WITH ANCILLARY OFFICE AND CANTEEN FOR A PERIOD OF 3 YEARS AND ASSOCIATED FILLING OF LAND IN "GREEN BELT" ZONE

VARIOUS LOTS IN D.D. 99, CHAU TAU, NEW TERRITORIES

PLANNNIG STATEMENT


Applicant

Chuen Kee Transportation Company

Consultancy Team

Planning Consultant: R-riches Property Consultants Limited


R-Riches
Property Consultants Ltd.

APR 2023
VERSION 1.0

## CONTENT PAGE


| | | |
|---|---|---|
| EXECUTIVE SUMMARY | | 3 |
| 行政摘要 | | 4 |
| 1. | INTRODUCTION | 5 |
| | *Background* | 5 |
| 2. | JUSTIFICATION | 6 |
| | *Affected by the Implementation of Kwu Tung North New Development Area* | 6 |
| | *Applicant's Effort in Identifying Suitable Site for Relocation* | 6 |
| | *Applied Use Is the Same as the Affected Business in Kwu Tung* | 6 |
| | *The Proposed Development is Not Incompatible with Surrounding Land Use* | 7 |
| 3. | SITE CONTEXT | 8 |
| | *Site Location* | 8 |
| | *Accessibility* | 8 |
| | *Existing Site Condition* | 8 |
| | *Surrounding Area* | 8 |
| 4. | PLANNING CONTEXT | 9 |
| | *Zoning of the Application Site* | 9 |
| | *Planning Intention* | 9 |
| | *Land Filling Restrictions* | 9 |
| | *Previous Application* | 10 |
| | *Similar Application* | 10 |
| | *Land Status* | 10 |
| 5. | DEVELOPMENT PROPOSAL | 12 |
| | *Development Details* | 12 |
| | *Land Filling of the Site* | 12 |
| | *Operation Mode* | 13 |
| | *Minimal Traffic Impact* | 13 |
| | *Minimal Environmental Impact* | 14 |
| | *Minimal Landscape Impact* | 15 |
| | *Minimal Drainage Impact* | 15 |
| | *Fire Safety Aspect* | 16 |
| 6. | CONCLUSION | 17 |

## APPENDICES


| | |
|---|---|
| **Appendix I** | Alternative Sites for Relocation |
| **Appendix II** | Drainage Proposal |
| **Appendix III** | Fire Service Installations Proposal |


## LIST OF PLANS


| | |
|---|---|
| **Plan 1** | Location Plan |
| **Plan 2** | Plan Showing the Zoning of the Application Site |
| **Plan 3** | Plan Showing the Land Status of the Application Site |
| **Plan 4** | Land Status of the Applicant's Original Premises in Kwu Tung |
| **Plan 5** | Land Use Zoning of the Applicant's Original Premises in Kwu Tung |
| **Plan 6** | Aerial Photo of the Applicant's Original Premises in Kwu Tung |
| **Plan 7** | Applicant's Original Premises in Kwu Tung (NDA Development Phasing) |
| **Plan 8** | Plan Showing Alternative Site for Relocation |
| **Plan 9** | Aerial Photo of the Application Site |
| **Plan 10** | Layout Plan |
| **Plan 11** | Land Filling Area of the Application Site |
| **Plan 12** | Run-In/Out of the Application Site |
| **Plan 13** | Swept Path Analysis |


## LIST OF TABLES


| | |
|---|---|
| **Table 1** | Land Ownership of the Application Site |
| **Table 2** | Development Parameters of the Proposed Development |
| **Table 3** | Details of Proposed Structures |
| **Table 4** | Parking and Loading / Unloading Provisions |
| **Table 5** | Trip Generation and Attraction of the Proposed Development |

## EXECUTIVE SUMMARY

- The applicant seeks to apply for planning permission under Section 16 of the Town Planning Ordinance (Cap. 131) to use various lots in D.D. 99, San Tin, New Territories (the Site) for **Proposed Temporary Warehouse (Excluding Dangerous Goods Godown) with Ancillary Office and Canteen for a Period of 3 Years and Associated Filling of Land.**

- The Site falls within an area zoned as "Green Belt" on the Approved San Tin Outline Zoning Plan No. S/YL-ST/8. The Site consists of an area of 4,242m² (about). 2 structures are proposed at the Site for warehouse, site office and canteen with total GFA of 3,562m² (about), the remaining area is reserved for parking, loading/unloading spaces and circulation area.

- The Site is accessible from Lok Ma Chau Road via a local access. The proposed development will operate on Monday to Saturday from 09:00 to 19:00. No operation on Sunday and public holiday.

- Justifications for the proposed development are as follows:
  - The applicant's original premises are affected by the development of Kwu Tung North New Development Area
  - The applied use is the same as the applicant's original premises in Kwu Tung
  - The proposed development is not incompatible with surrounding land use
  - No adverse impact is anticipated to the surrounding area
  - The proposed development is only on a temporary basis, it will not frustrate the long-term planning intention of the "GB" zone

- Details of development parameters are as follows:

| | |
|---|---|
| Application Site Area | 4,242 m² (about) |
| Covered Area | 1,781 m² (about) |
| Uncovered Area | 2,461 m² (about) |
| | |
| Plot Ratio | 0.84 (about) |
| Site Coverage | 42% (about) |
| | |
| Number of Structure | 2 |
| Total GFA<br>*Domestic GFA*<br>*Non-Domestic GFA* | 3,562 m² (about)<br>Not applicable<br>3,562 m² (about) |
| | |
| Building Height | 8 m – 11m (about) |
| No. of Storey | 2 |

**行政摘要** *(內文如與英文版本有任何差異，應以英文版本為準)*

- 申請人現根據《城市規劃條例》(第 131 章)第 16 條，提交有關新界洲頭丈量約份第 99 約多個地段的規劃申請，於上述地段作**擬議臨時貨倉（危險品倉庫除外）連附屬辦公室及食堂（為期 3 年）及相關填土工程**。

- 申請地點所在的地區在《新田分區計劃大綱核准圖編號 S/YL-ST/8》上劃為「綠化地帶」用途地帶。申請地盤面積為 4,242 平方米（約）。申請地點將設有 2 座構築物作貨倉及場地辦公室，構築物的總樓面面積合共為 3,562 平方米（約），其餘地方將預留作停車位、上／落貨位及流轉空間。

- 申請地點可從落馬洲路經一條地區道路前往。擬議發展的作業時間為星期一至六上午 9 時至下午 7 時。星期日及公眾假期休息。

- 擬議發展的申請理據如下：
  - 申請人原來的經營處所受到政府古洞北新發展區發展影響
  - 申請的用途與申請人先前於古洞北的發展用途一致
  - 擬議發展與周邊的用途並非不協調
  - 擬議發展不會對周邊地區帶來負面影響
  - 擬議發展只屬臨時性質，則不會影響「綠化地帶」用途地帶的長遠規劃意向

- 擬議發展的詳情發展參數如下：

| | |
|---|---|
| **申請地盤面積：** | 4,242 平方米（約） |
| **上蓋總面積：** | 1,781 平方米（約） |
| **露天地方面積：** | 2,461 平方米（約） |
| | |
| **地積比率：** | 0.84（約） |
| **上蓋覆蓋率：** | 42%（約） |
| | |
| **樓宇數目：** | 2 座 |
| **總樓面面積**<br>*住用總樓面面積：*<br>*非住用總樓面面積：* | 3,562 平方米（約）<br>*不適用*<br>*3,562 平方米（約）* |
| | |
| **構築物高度：** | 8 米 －11 米（約） |
| **構築物層數：** | 2 層 |

## 1. INTRODUCTION

*Background*

1.1 R-riches Property Consultants Limited has been commissioned by *Chuen Kee Transportation Company* (the applicant) to submit this planning application under the Section (S.) 16 of the *Town Planning Ordinance (Cap. 131)*(the Ordinance) to the Town Planning Board (the Board) on its behalf in respect to Lots 276 S.B RP, 277 S.B RP, 279 S.B RP (Part), 282 S.B RP, 283 S.B RP, 284, 285, 289, 321 RP (Part), 322, 323 and 324 in D.D. 99, Chau Tau, New Territories (the Site)**(Plan 3)**.

1.2 The applicant seeks to use the Site for **Proposed Temporary Warehouse (Excluding Dangerous Goods Godown) with Ancillary Office and Canteen for a Period of 3 Years and Associated Filling of Land** (proposed development). The Site falls within an area zoned as "Green Belt" ("GB") on the Approved San Tin Outline Zoning Plan (OZP) No. S/YL-ST/8 **(Plan 2)**. According to the Notes of the OZP, 'warehouse (excluding dangerous goods godown)' is not a column 1 nor 2 use within the "GB" zone, which requires planning permission from the Board **(Plan 2)**. In order to use the Site for the proposed development, submission of planning application under S.16 of the Ordinance is required.

1.3 In support of the proposal, a set of indicative development plans and drawings are provided with the planning statement. Set of assessments to mitigate potential adverse impacts will be submitted, if required, at a later stage for the consideration of Government departments and members of the Board.

## 2. JUSTIFICATIONS

*Affected by the Implementation of Kwu Tung North New Development Area*

2.1 The applicant has been operating their warehouse (for storage of household goods) business in Kwu Tung (i.e. various lots in D.D. 95) since the 2000s (**Plans 4 to 6**). The premises currently falls within an area zoned as "Residential (Group B)", "Open Space" and "Open Space (1)" on the Approved Kwu Tung North (KTN) OZP No. S/KTN/2 (**Plan 5**).

2.2 According to the implementation program of the development of KTN NDA, the premises falls within sites under the Remaining Phase Works[1] (**Plan 7**). As land where the premises will be developed for 'residential' and 'open space' uses upon completion of the KTN NDA, the concerned parcel of land will be resumed and reverted to the Government in the future. Therefore, the applicant desperately needs to identify suitable site for relocation to continue its business operation.

*Applicant's Effort in Identifying Suitable Site for Relocation*

2.3 Whilst the applicant had spent effort to relocate its premises to a number of alternative sites in the New Territories., those sites were considered not suitable or impracticable due to various issues such as land use incompatibility, environmental concerns, land ownership, accessibility or site area being too small/big (**Appendix I** and **Plan 8**). At last, the Site was identified as it is the nearest to the applicant's original premises in Kwu Tung and easily accessible from Lok Ma Chau Road via a local access.

*Applied Use Is the Same as the Affected Business in Kwu Tung*

2.4 The proposed development involves of warehouse (excluding dangerous goods godown) with ancillary office and canteen to support the daily operation of the Site. The applied use is the same as the affected business in Kwu Tung.

2.5 Despite the fact that the Site area (i.e. 4,242 $m^2$) and GFA (i.e. 3,562 $m^2$) are larger than the original premises in Kwu Tung, the growth in online shopping has stimulated demand for local indoor storage space in Hong Kong since the early 2010s. In light of this, the applicant had previously proposed expanding the operation scale in order to alleviate the pressing demand at the original premises; however, the Government's land resumption plan to facilitate the implementation of the KTN NDA caused the business expansion plan to be put on hold temporarily.

2.6 The proposed scheme (with a higher plot ratio and building height than the original

[1] *Remaining Phase Works – PWP Item No. 828CL – Remaining Phase of Site Formation and Engineering Infrastructure Works at KTN NDA and FLN NDA*

premises) provides an excellent opportunity to support the applicant's original business expansion plan in Kwu Tung. The expanded warehouse could result in increased efficiency by providing more space for storage, bulk breaking, and packaging of household goods.

2.7 It could also result in cost savings by reducing transportation costs for frequent deliveries and improving the overall supply chain. The proposed site office will also allow the applicant to attract more business clients, which will subsequently generate employment opportunities and economic benefits for the New Territories while also better utilizing precious land resources. The applicant will strictly follow the proposed scheme, and no further expansion is anticipated during the planning approval period.

*The Proposed Development is Not Incompatible with Surrounding Land Use*

2.8 Although the Site falls within area zoned as "GB" zone of the Approved San Tin OZP No. S/YL-ST/8, the Site is currently vacant and occupied by some vacant temporary structures. The building height of proposed structures (i.e. 11m) are not significantly higher than nearby New Territories Exempted Houses (i.e. 8.23m). The applied use is also considered not incompatible with surrounding land use which is dominated by vehicle park, storage and workshops uses across Lok Ma Chau Road. The proposed development will not create adverse impact to the surrounding area.

2.9 Although the proposed development is not in line with planning intention of the "GB", the special background of the application should be considered on individual merit, which approval of the current application would therefore not set an undesirable precedent for the "GB" zone. Upon approval of the planning application, the applicant will make effort in complying with approval conditions related to fire service and drainage aspects, to minimize potential adverse impact arisen from the proposed development.

## 3. SITE CONTEXT

*Site Location*

3.1 The Site is located in close vicinity of the Lok Ma Chau Border Control Point. It is approximately 200m west of Lok Ma Chau Border Control Point; 5.8km west of Sheung Shui MTR Station; and 9.5km southwest of Man Kam To Boundary Control Point (**Plan 1**).

*Accessibility*

3.2 The Site is accessible from Lok Ma Chau Road via a local access (**Plan 1**).

*Existing Site Condition*

3.3 The Site is generally flat, partially fenced off and covered by vegetation. It is currently occupied by several vacant temporary structures. The site level of the Site varies from +3.4 mPD to +4.5 mPD (about)(**Plans 3** and **9**).

*Surrounding Area*

3.4 The Site is mainly surrounded by vehicle park, temporary structures for storage, workshop and agricultural uses; and vacant land covered by vegetation and hard-paving.

3.5 To its immediate north are areas occupied by temporary structures for storage and agricultural uses. To its further north are land covered by vegetation and woodland.

3.6 To its immediate east are vacant land covered by vegetation. To its further east and northeast are indigenous villages - Pun Uk Tsuen and Chau Tau Tsuen.

3.7 To its immediate south are vacant land covered by vegetation and Chau Tau West Road. To its further south are vacant land covered by vegetation and vehicle parks across Lok Ma Chau Road.

3.8 To its immediate west is the local access connecting the Site to Lok Ma Chau Road. To its further west are vehicle park, occupied by temporary structures for warehouse, logistics centres and workshop uses.

## 4. PLANNING CONTEXT

*Zoning of the Application Site*

4.1 The Site falls within an area zoned as "GB" on the Approved San Tin OZP No. S/YL-ST/8 (Plan 2). According to the Notes of the OZP, 'warehouse' use is not a column 1 nor column 2 use within the "GB" zone, which requires permission from the Board.

4.2 The Site falls wholly within "GB" zone (Plan 2). The application is only on a temporary basis, it will not frustrate the long-term planning intention of the "GB" zone.

*Planning Intention*

4.3 *The planning intention of this zone is primarily for defining the limits of urban and sub-urban development areas by natural features and to contain urban sprawl as well as to provide passive recreational outlets. There is a general presumption against development within this zone.*

*Land Filling Restrictions*

4.4 *Any **filling of land**/pond or excavation of land, including that to effect a change of use to any of those specified in Columns 1 and 2 above or the uses or developments always permitted under the covering Notes (except public works co-ordinated or implemented by Government, and maintenance, repair or rebuilding works), shall not be undertaken or continued on or after the date of the first publication in the Gazette of the notice of the interim development permission area plan without the permission from the Town Planning Board under section 16 of the Town Planning Ordinance.*

*Relevant Guidelines*

4.5 Town Planning Board Guidelines (TPB PG-No. 10)

4.5.1 The TPB PG-No. 10 for Application for Development Within GB Zone is relevant to the application. *As application for new development in a "GB" zone will only be considered in exceptional circumstances and must be justified with very strong planning grounds. The scale and intensity of the proposed development including the plot ratio, site coverage and building height should be compatible with the character of surrounding areas.*

*4.5.2 The design and layout of any proposed development should be compatible with the surrounding areas. The development should not involve extensive clearance of existing natural vegetation, affect the existing natural landscape, or cause any adverse visual impact on the surrounding environment. Tree*

*preservation and landscaping proposals should be provided.*

*4.5.3 The proposed development should not overstrain the capacity of existing and planned infrastructure such as sewerage, roads and water supply. It should not adversely affect drainage on the surrounding development.*

4.6 The proposed development is intended to facilitate relocation of business premises affected by land resumption for development of KTN NDA. As the applied use is the same as the affected business in Kwu Tung and the proposed scheme is considered not incompatible with the surrounding area, sympathetic consideration should be given based on the special background of the application.

*Previous Application*

4.7 There is no previous approved S.16 application in respect of the Site.

*Similar Application*

4.8 There is no similar approved application within the same "GB" zone.

*Land Status*

4.9 The Site consist 12 private lots, i.e. Lots 276 S.B RP, 277 S.B RP, 279 S.B RP (Part), 282 S.B RP, 283 S.B RP, 284, 285, 289, 321 RP (Part), 322, 323 and 324 in D.D. 99 with total land area of 4,242 $m^2$ (about) of Old Schedule Lots held under the Block Government Lease (**Plan 7**). Majority of the land lots are currently owned by Tso Tong, while the remaining area are owned by individuals and companies. The ownership details are provided at **Table 1** below:

**Table 1:** Land Ownership of the Site

| Private Lot in D.D. 99 | | Ownership |
|---|---|---|
| 1 | Lot 276 S.B RP | *Billion Win International Holdings Limited* |
| 2 | Lot 277 S.B RP | *Man Ting Shiu Tong* |
| 3 | Lot 279 S.B RP | *Man Hok Tin Tso* |
| 4 | Lot 282 S.B RP | *Billion Win International Holdings Limited* |
| 5 | Lot 283 S.B RP | |
| 6 | Lot 284 | *Man On Tsai Tso* |
| 7 | Lot 285 | *Poon For Ling, Poon Ching Wan, Poon Ching Sau* |
| 8 | Lot 289 | *Man Ting Shiu Tong* |
| 9 | Lot 321 RP | *Man Hok Tin Tso* |
| 10 | Lot 322 | *Billion Win International Holdings Limited* |
| 11 | Lot 323 | |
| 12 | Lot 324 | *Richlands Properties Limited* |

4.10 Since there is the restriction that no structure is allowed to be erected without the prior approval of the Government on the private land portion of the Site. The applicant will submit Short Term Waiver (STW) application to LandsD to make way for erection of the proposed structures at the Site. No structure is proposed for domestic use.

## 5. DEVELOPMENT PROPOSAL

*Development Details*

5.1 The Site consists of an area of 4,242 $m^2$ (about). The detailed development parameters are shown at **Table 2** below.

**Table 2**: Development Parameters of the Proposed Development

| | |
|---|---|
| **Application Site Area** | 4,242 $m^2$ (about) |
| **Covered Area** | 1,781 $m^2$ (about) |
| **Uncovered Area** | 2,461 $m^2$ (about) |
| | |
| **Plot Ratio** | 0.84 (about) |
| **Site Coverage** | 42% (about) |
| | |
| **Number of Structure** | 2 |
| **Total GFA**<br>- *Domestic GFA*<br>- *Non-Domestic GFA* | 3,562 $m^2$ (about)<br>Not applicable<br>3,562 $m^2$ (about) |
| | |
| **Building Height** | 8 m – 11m (about) |
| **No. of Storey** | 2 |

5.2 2 structures are proposed at the Site for warehouse and ancillary site office/canteen with total GFA of 3,562 $m^2$ (about), the remaining area is reserved for parking, loading/unloading (L/UL) spaces and circulation area (**Plan 10**). Details of structures are shown at **Table 3** below:

**Table 3**: Details of Proposed Structures

| Structure | Use | Covered Area | Gross Floor Area | Building Height |
|---|---|---|---|---|
| B1 | Warehouse (Excl. Dangerous Goods Godown) | 1,673 $m^2$ (about) | 3,346 $m^2$ (about) | 11 m (2-storey) |
| B2 | Ancillary Office and Canteen | 108 $m^2$ (about) | 216 $m^2$ (about) | 8 m (2-storey) |
| **Total** | | **1,781 $m^2$ (about)** | **3,562 $m^2$ (about)** | - |

*Land Filling of the Site*

5.3 The whole Site (i.e. 4,242$m^2$) is proposed to be filled with concrete with no more than 1.6m in depth (new site level varies from +4.5mPD to +5.5mPD) for site formation of

structures, parking and circulation space (**Plan 11**). As the Site is of soiled ground, concrete site formation is required to provide a relatively flat surface for erection of structure and circulation purpose. Therefore, land filling area is considered necessary and has been kept to minimal for the operation of the proposed development. The Site will be reinstated the Site after the planning approval period.

*Operation Mode*

5.4 The Site will be used as warehouse (excluding dangerous goods godown) for storage of household goods, kitchenware, toiletries, household electrical appliance etc.. The proposed development will operate on Monday to Saturday from 09:00 to 19:00. No operation on Sunday and public holiday. No workshop activities and storage of dangerous goods will be carried out at the Site at any time during the planning approval period.

5.5 It is estimated that the Site would be able to accommodate not more than 15 staff. The site office is proposed to provide indoor office space for administrative staff to support the daily operation of the Site. Only staff of the Site will be served at the ancillary canteen. As no shopfront is proposed at the Site, visitor is not anticipated at the Site.

*Minimal Traffic Impact*

5.6 The Site is accessible from Lok Ma Chau Road via a local access (**Plan 1**). One 7.3m (about) wide ingress/egress is provided at the western part of the Site (**Plan 10**). A proper run-in/out will be implemented by respective B/Ds under PWP Item No. 7856CL[2], which connects the local access to Lok Ma Chau Road (**Plan 12**).

5.7 Sufficient space is provided for smooth maneuvering of vehicle entering to and exiting from the Site and within the Site (**Plan 13**). No vehicle will be allowed to queue back to or reverse onto/from the Site to the public road. Staff is deployed to station at the ingress/egress of the Site to direct incoming/outgoing vehicle to enhance pedestrian safety.

5.8 4 private car parking spaces, 3 light goods vehicle parking spaces and 3 L/UL spaces are provided at the Site, details of spaces are provided at **Table 4** below:

[2] PWP Item No. 7856 CL – Development of Lok Ma Chau Loop – Main Works Package 1 – Site Formation and Instructure Works

Table 4: Parking and L/UL Provisions

| **Type of Parking Space:** | **Number of Space** |
|---|---|
| Private Car Parking Space for Staff<br>- *2.5 m (W) X 5 m (L)* | 4 |
| Light Goods Vehicle Parking Space for Staff<br>- *3.5 m (W) X 7 m (L)* | 3 |
| **Type of L/UL Space:** | **Number of Space** |
| L/UL Space for Light Goods Vehicle<br>- *3.5 m (W) X 7 m (L)* | 2 |
| L/UL Space for Container Vehicle<br>- *3.5 m (W) X 16 m (L)* | 1 |

5.9 Below is the breakdown of peak hours of estimated vehicular trip attracted by the proposed development:

Table 5: Trip Generation and Attraction of the Proposed Development

| **Time Period** | **Trip Generation and Attraction** | | | | | | |
|---|---|---|---|---|---|---|---|
| | Private Car (Staff) | | Light Goods Vehicle | | Container Vehicle | | 2-Way Total |
| | In | Out | In | Out | In | Out | |
| Trips at AM peak per hour (09:00 – 10:00) | 4 | 0 | 2 | 0 | 1 | 0 | 7 |
| Trips at PM peak per hour (17:00 – 18:00) | 0 | 4 | 0 | 1 | 0 | 1 | 6 |
| Traffic trip per hour (average) | 1 | 1 | 1 | 1 | 0.5 | 0.5 | 5 |

5.10 As the number of vehicular trips generated and attracted by the proposed development is minimal, adverse traffic impact to the surrounding roads should not be anticipated.

*Minimal Environmental Impact*

5.11 The applicant will strictly follow the 'Code of Practice on Handling the Environmental Aspects of Temporary Uses and Open Storage Sites' issued by Environmental Protection Department (EPD) to minimise adverse environmental impacts and nuisance to the surrounding area. The applicant will strictly comply with all environmental protection / pollution control ordinances, i.e. Water Pollution Control Ordinance, Air Pollution Control Ordinance, Noise Control Ordinance etc. at all times during the planning approval period.

5.12 During the construction stage, the applicant will follow the good practices stated in ProPECC PN 1/94 to minimize the impact on the nearby watercourse water quality. Surface run-off from the construction phase will be discharged into storm drains through appropriately designed sand/silt removal facilities such as sand traps, silt traps, and sediment basins. Silt removal facilities, channels, and manholes will be maintained, and the deposited silt and grit will be removed on a regular basis, at the start and end of each rainstorm, to ensure that these facilities are always operational.

5.13 During the operation of the proposed development, the major source of wastewater will be sewage from toilets generated by staff. The applicant will implement good practices under ProPECC PN 5/93 when designing on-site drainage system with the Site, i.e. the use of septic tank for sewage treatment. The applicant will submit and implement relevant proposals to the satisfaction of Director of Environmental Protection after planning permission has been obtained from the Board. Licensed collectors will be employed by the applicant to collect and dispose of sewage regularly, and the location of portable toilets are located away from the watercourse in the vicinity.

5.14 2.5m high solid metal wall with thickness of 5mm will be erected along the site boundary by the applicant. The boundary wall will be installed properly by licensed contractor to prevent misalignment of walls, to ensure that there is no gap or slit on boundary wall. In addition, maintenance will be conducted by the applicant on a regular basis.

*Minimal Landscape Impact*

5.15 No old and valuable tree or protected species has been identified at the Site. Due to proposed land filling works for circulation purpose, majority of the Site area will be disturbed. The remaining area will be affected by the erection of structures for warehouse and site office/canteen uses. Therefore, all existing trees will be affected and none of the existing trees is proposed to be retained at the Site.

5.16 The applicant will submit a landscape proposal to alleviate the potential visual impact of the proposed development.

*Minimal Drainage Impact*

5.17 Although there is no existing drainage system within the Site, existing public drainage manhole is available for connection along the western boundary of the Site. The applicant submitted a drainage proposal, with provision of peripheral u-channels and catchpits to mitigate adverse drainage impact generated by the development (**Appendix II**).

5.18 As illustrated at the drainage proposal, adverse drainage impact to the surrounding areas should not be anticipated. The applicant will implement the proposed drainage facilities at the Site once the drainage proposal is accepted by Drainage Services Department/the Board.

*Fire Safety Aspect*

5.19 The applicant submitted a fire service installations (FSIs) proposal in accordance to *Building Ordinance*, *Fire Services* Ordinance and *Fire Safety (Buildings) Ordinance* (**Appendix III**).

5.20 The applicant will implement the proposed FSIs at the Site once the proposal is accepted by Fire Services Department/the Board.

## 6. CONCLUSION

6.1 The applicant has previously spent effort in identifying suitable site for relocation of their premises in Kwu Tung to pave way for the development of KTN NDA. Whilst the applicant has tried to relocate its premises to a number of alternative sites in New Territories, those sites were considered not suitable or impracticable. The applied use is the same as the affected business in Kwu Tung. The proposed development would be able to facilitate the applicant's business expansion plan, in order to alleviate the pressing demand for indoor storage space.

6.2 Although the proposed development is not a column one nor column two use within the "GB" zone, the application is only on a temporary basis, it would not jeopardize the long-term planning intention of the "GB" zone. Given that the application's special background is to facilitate the development of KTN NDA, approval of the current application would not set an undesirable precedent within the "GB" and should be considered on its own merits.

6.3 As the surrounding area is intermixed with workshops, storage and vacant land and the BH of proposed structures are similar to the nearby NTEHs, the proposed development is considered not incompatible with the surrounding area. The applicant will also strictly follow the 'Code of Practice on Handling the Environmental Aspects of Temporary Uses and Open Storage Sites' by the EPD to minimize all possible environmental impacts on the nearby sensitive receivers.

6.4 The proposed development will not create significant adverse traffic, environmental, landscape and drainage impact to the surrounding areas. Adequate mitigation measures are provided, i.e. submission of landscape, drainage, fire service installations proposals etc. to mitigate any adverse impact arising from the proposed development (**Appendices II** to **IV**).

6.5 In view of the above, the Board is hereby respectfully recommended to approve the subject application for 'Proposed Temporary Warehouse (Excluding Dangerous Goods Godown) with Ancillary Office and Canteen for a Period of 3 Years and Associated Filling of Land'.

**R-riches Property Consultants Limited**
**April 2023**

## LIST OF PLANS


| | |
|---|---|
| **Plan 1** | Location Plan |
| **Plan 2** | Plan Showing the Zoning of the Application Site |
| **Plan 3** | Plan Showing the Land Status of the Application Site |
| **Plan 4** | Land Status of the Applicant's Original Premises in Kwu Tung |
| **Plan 5** | Land Use Zoning of the Applicant's Original Premises in Kwu Tung |
| **Plan 6** | Aerial Photo of the Applicant's Original Premises in Kwu Tung |
| **Plan 7** | Applicant's Original Premises in Kwu Tung (NDA Development Phasing) |
| **Plan 8** | Plan Showing Alternative Site for Relocation |
| **Plan 9** | Aerial Photo of the Application Site |
| **Plan 10** | Layout Plan |
| **Plan 11** | Land Filling Area of the Application Site |
| **Plan 12** | Run-In/Out of the Application Site |
| **Plan 13** | Swept Path Analysis |

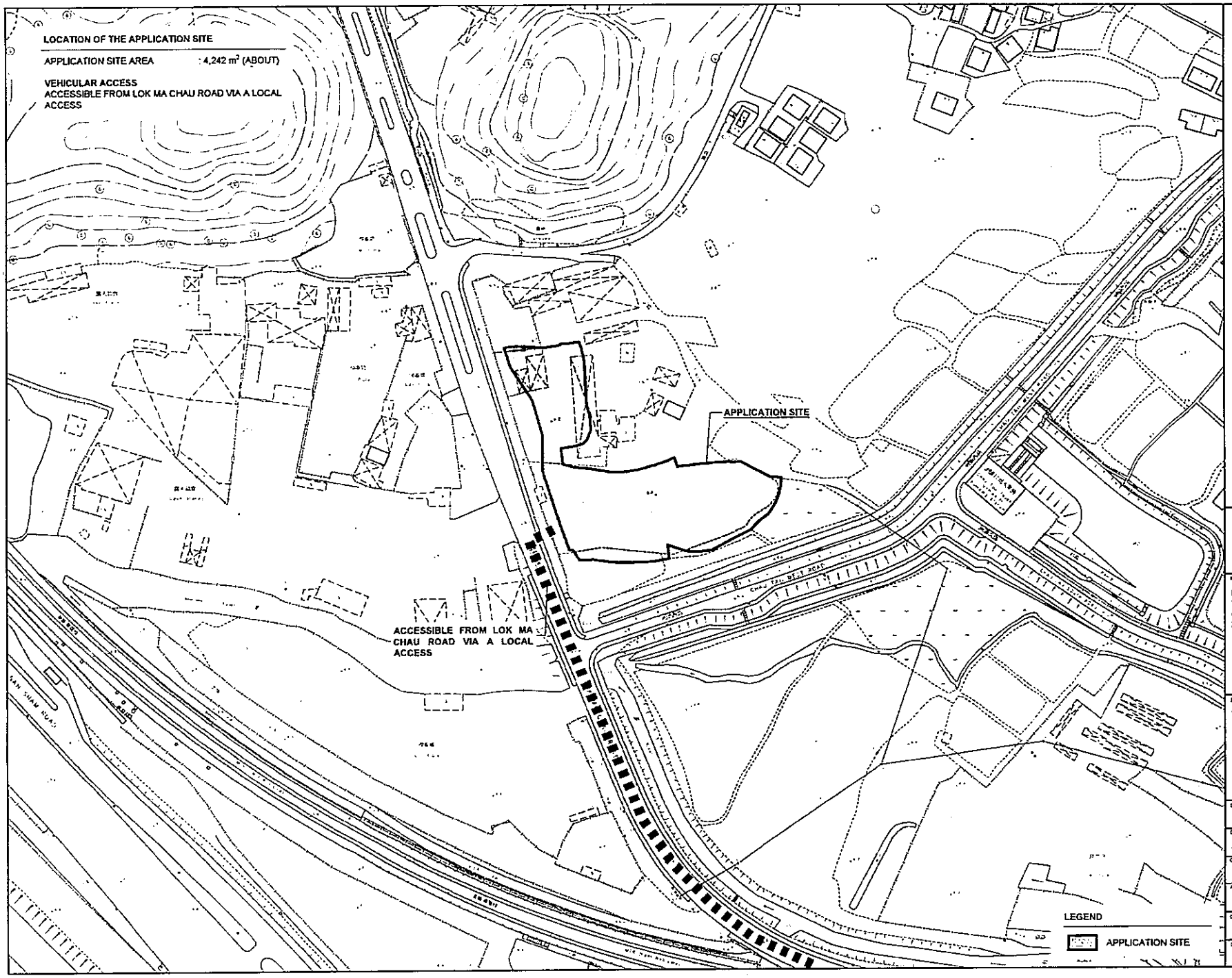


NORTH
W E
S

PLANNING CONSULTANT

R-Riches Property Consultants Ltd.

PROJECT

PROPOSED TEMPORARY WAREHOUSE WITH ANCILLARY OFFICE AND CANTEEN FOR A PERIOD OF 3 YEARS AND ASSOCIATED FILLING OF LAND

SITE LOCATION

VARIOUS LOTS IN D.D. 99, CHAU TAU, NEW TERRITORIES

| | |
|---|---|
| SCALE | 1 : 2000 @ A4 |
| DRAWN BY | MN |
| DATE | 30.1.2023 |
| CHECKED BY | |
| DATE | |
| APPROVED BY | |
| DATE | |
| DWG. TITLE | LOCATION PLAN |
| DWG NO. | PLAN 1 |
| VER | 001 |

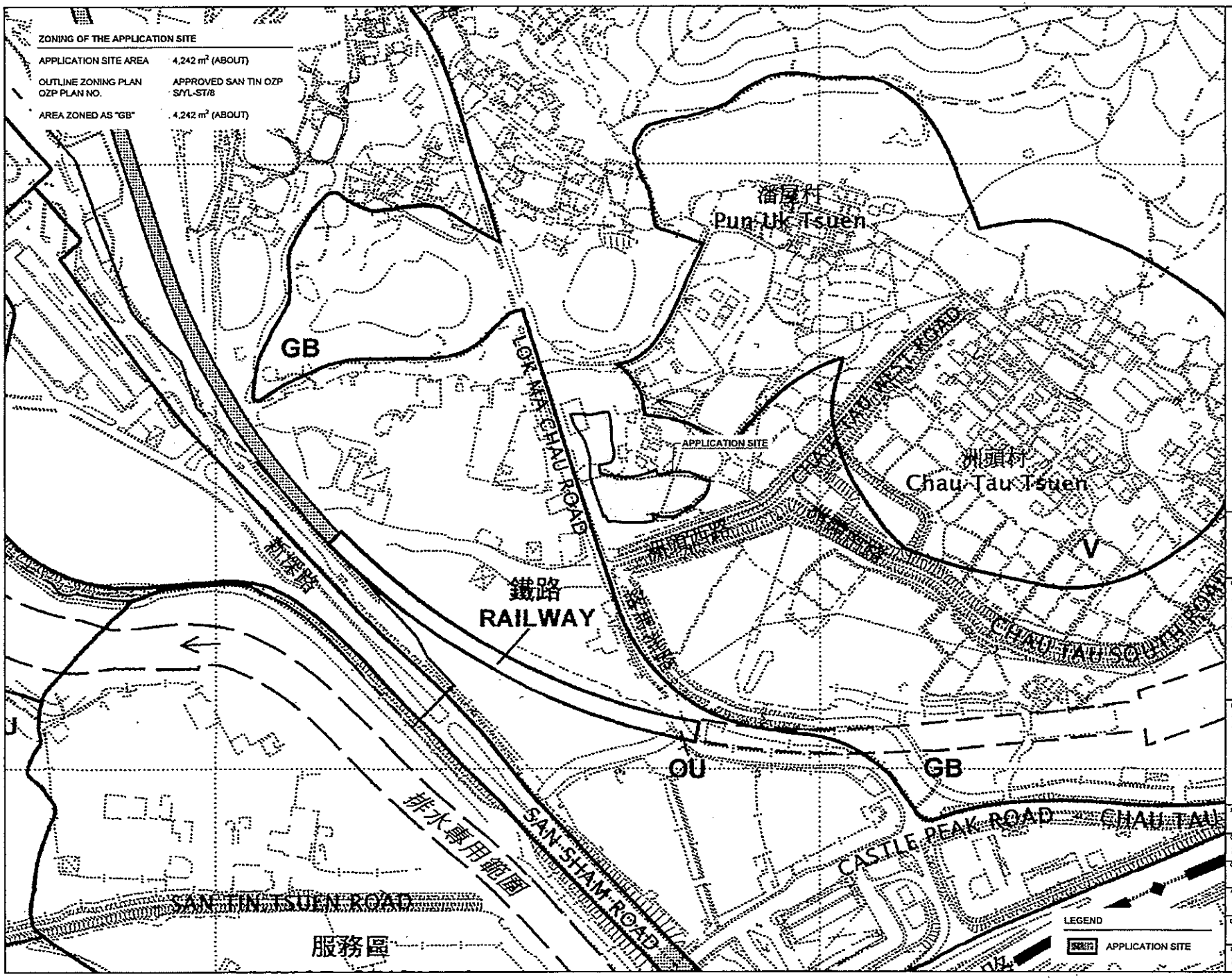


PLANNING CONSULTANT

R-Riches Property Consultants Ltd.

PROJECT

PROPOSED TEMPORARY WAREHOUSE WITH ANCILLARY OFFICE AND CANTEEN FOR A PERIOD OF 3 YEARS AND ASSOCIATED FILLING OF LAND

SITE LOCATION

VARIOUS LOTS IN D.D. 99, CHAU TAU, NEW TERRITORIES

| | |
|---|---|
| SCALE | 1 : 4000 @ A4 |
| DRAWN BY | MN |
| DATE | 30.1.2023 |
| CHECKED BY | |
| DATE | |
| APPROVED BY | |
| DATE | |
| DWG. TITLE | ZONING OF THE SITE |
| DWG NO. | PLAN 2 |
| VER. | 001 |

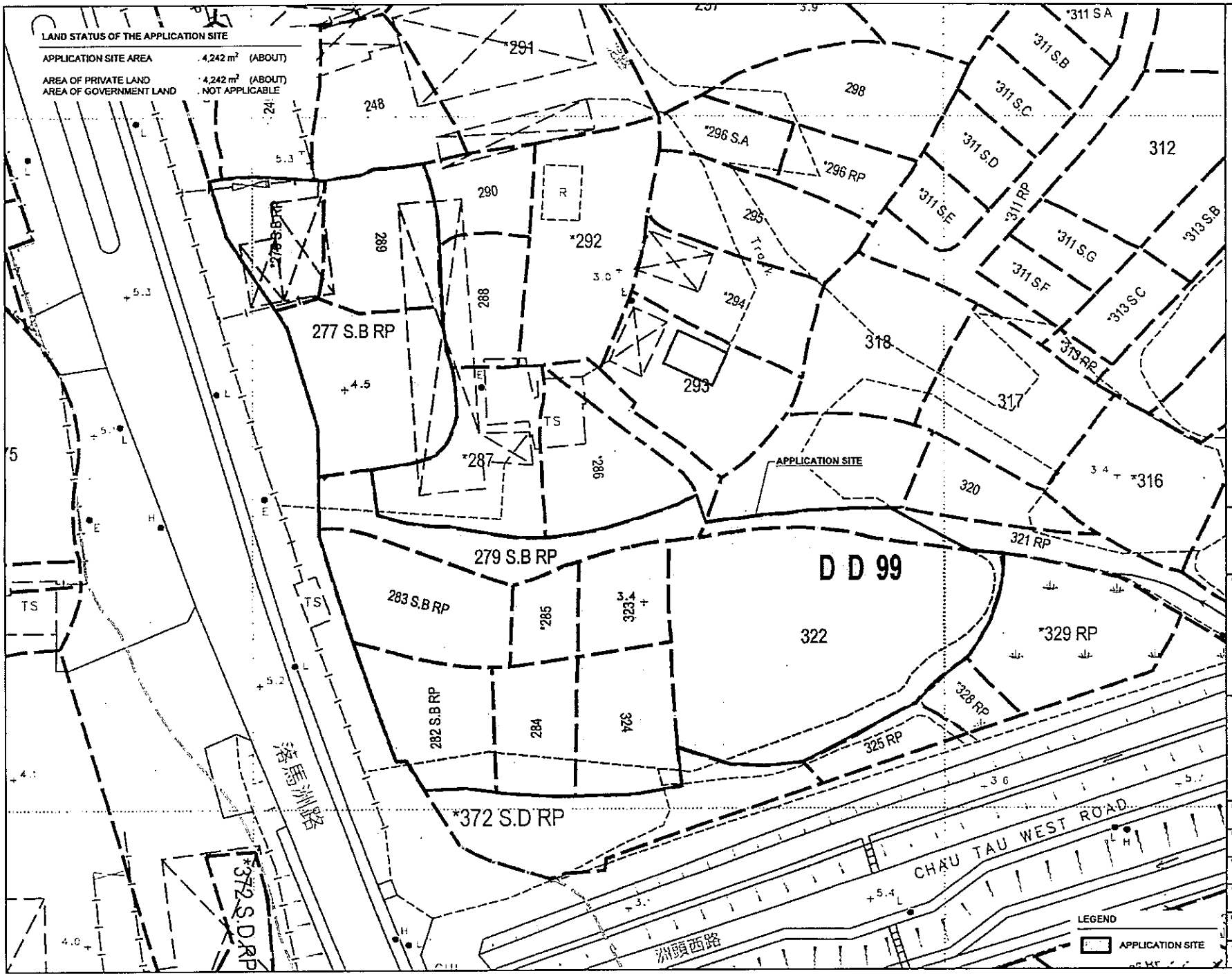


PLANNING CONSULTANT

R-Riches Property Consultants Ltd.

PROJECT

PROPOSED TEMPORARY WAREHOUSE WITH ANCILLARY OFFICE AND CANTEEN FOR A PERIOD OF 3 YEARS AND ASSOCIATED FILLING OF LAND

SITE LOCATION

VARIOUS LOTS IN D.D. 99, CHAU TAU, NEW TERRITORIES

| | |
|---|---|
| SCALE | 1 : 700 @ A4 |
| DRAWN BY: MN | DATE: 30.1.2023 |
| CHECKED BY | DATE |
| APPROVED BY | DATE |
| DWG. TITLE | LAND STATUS OF THE SITE |
| DWG NO. PLAN 3 | VER. 001 |

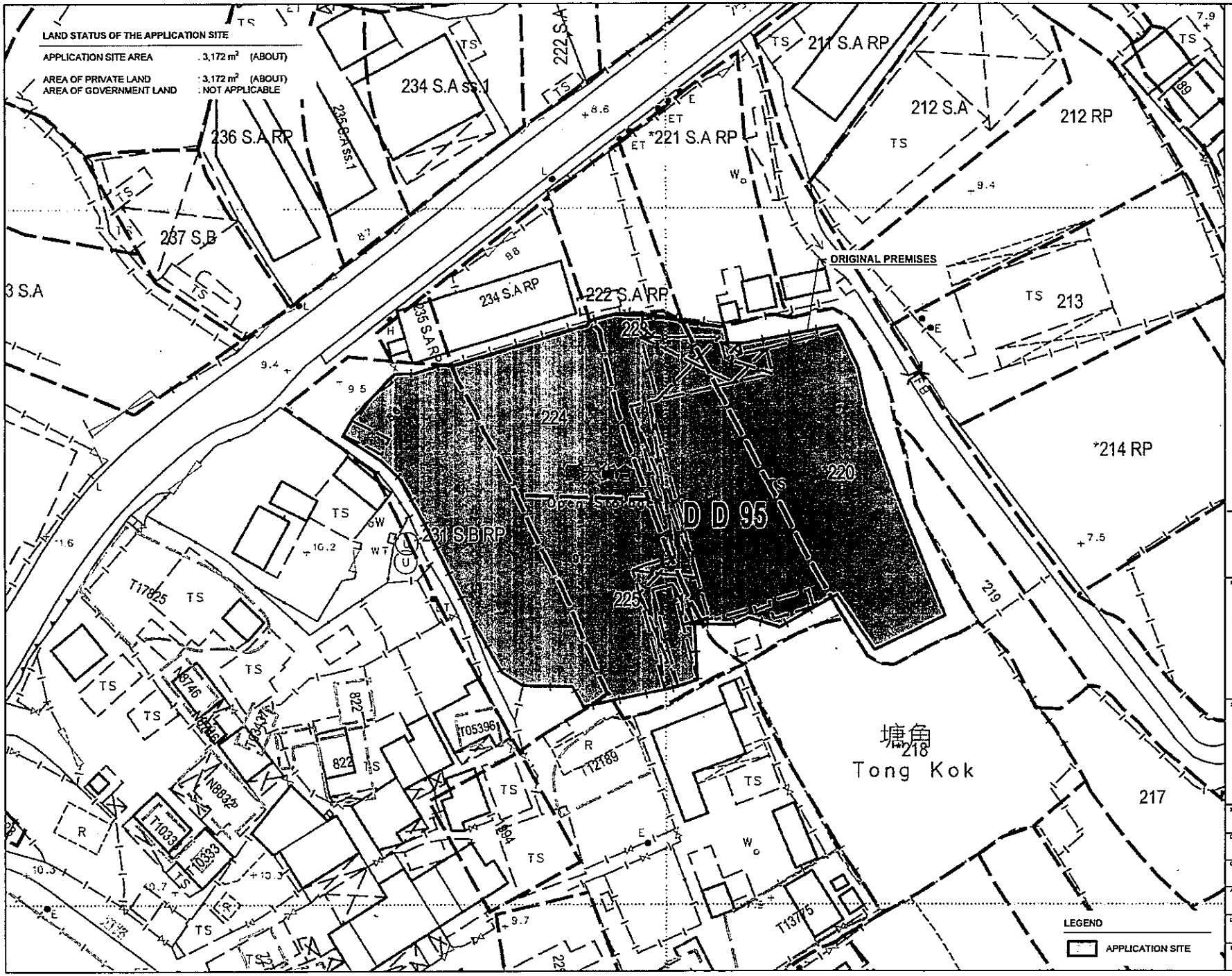


PLANNING CONSULTANT

R-Riches Property Consultants Ltd.

PROJECT

PROPOSED TEMPORARY WAREHOUSE WITH ANCILLARY OFFICE AND CANTEEN FOR A PERIOD OF 3 YEARS AND ASSOCIATED FILLING OF LAND

SITE LOCATION

VARIOUS LOTS IN D.D. 99, CHAU TAU, NEW TERRITORIES

| | |
|---|---|
| SCALE | 1 : 700 @ A4 |
| DRAWN BY | MN |
| DATE | 30.1.2023 |
| CHECKED BY | |
| DATE | |
| APPROVED BY | |
| DATE | |
| DWG TITLE | OP (LAND STATUS) |
| DWG NO | PLAN 4 |
| VER | 001 |

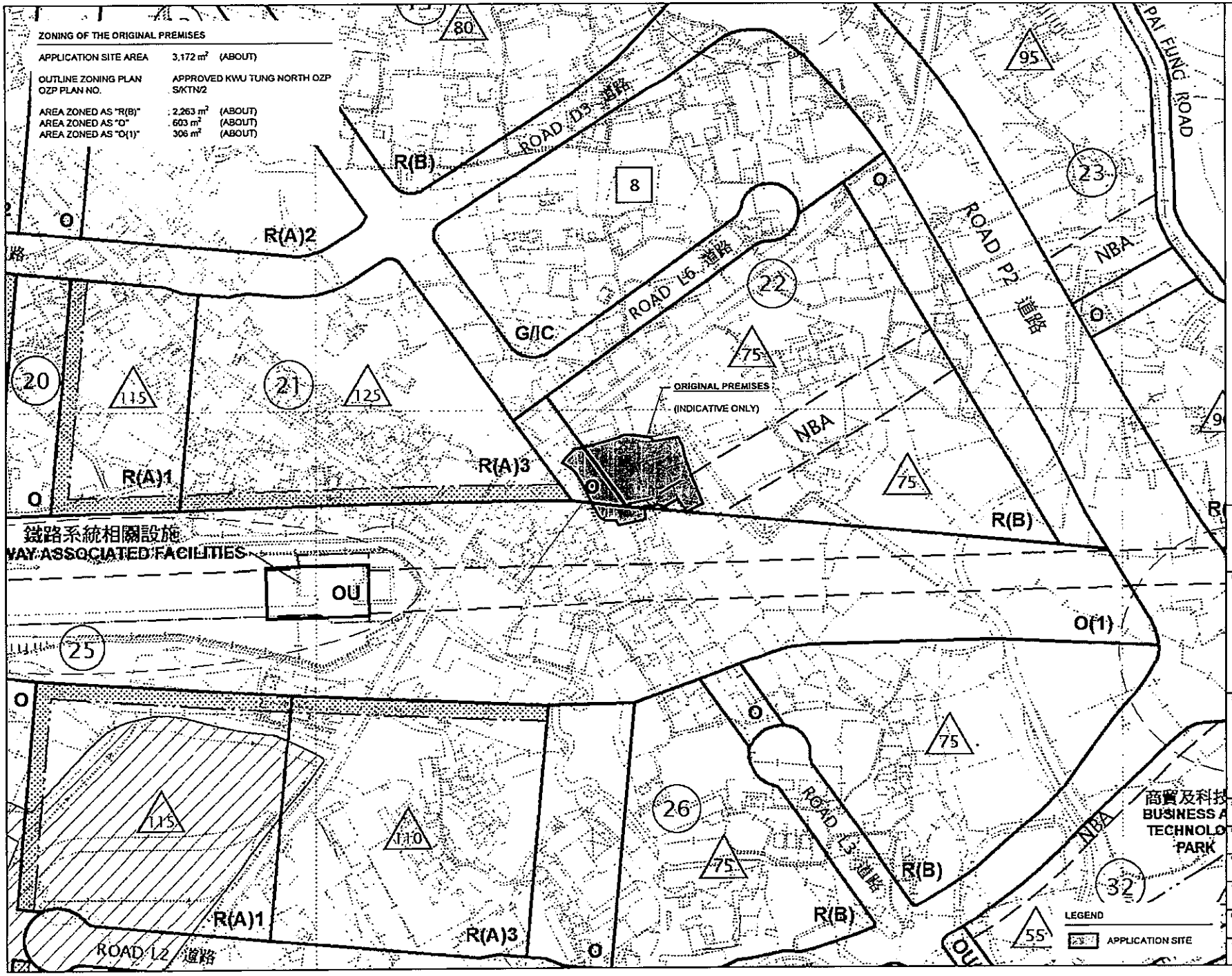


PLANNING CONSULTANT

R-Riches Property Consultants Ltd.

PROJECT

PROPOSED TEMPORARY WAREHOUSE WITH ANCILLARY OFFICE AND CANTEEN FOR A PERIOD OF 3 YEARS AND ASSOCIATED FILLING OF LAND

SITE LOCATION

VARIOUS LOTS IN D.D. 99, CHAU TAU, NEW TERRITORIES

| | |
|---|---|
| SCALE 1 : 3000 @ A4 | |
| DRAWN BY MN | DATE 30.1.2023 |
| CHECKED BY | DATE |
| APPROVED BY | DATE |
| DWG TITLE OP (ZONING) | |
| DWG NO. PLAN 5 | VER. 001 |

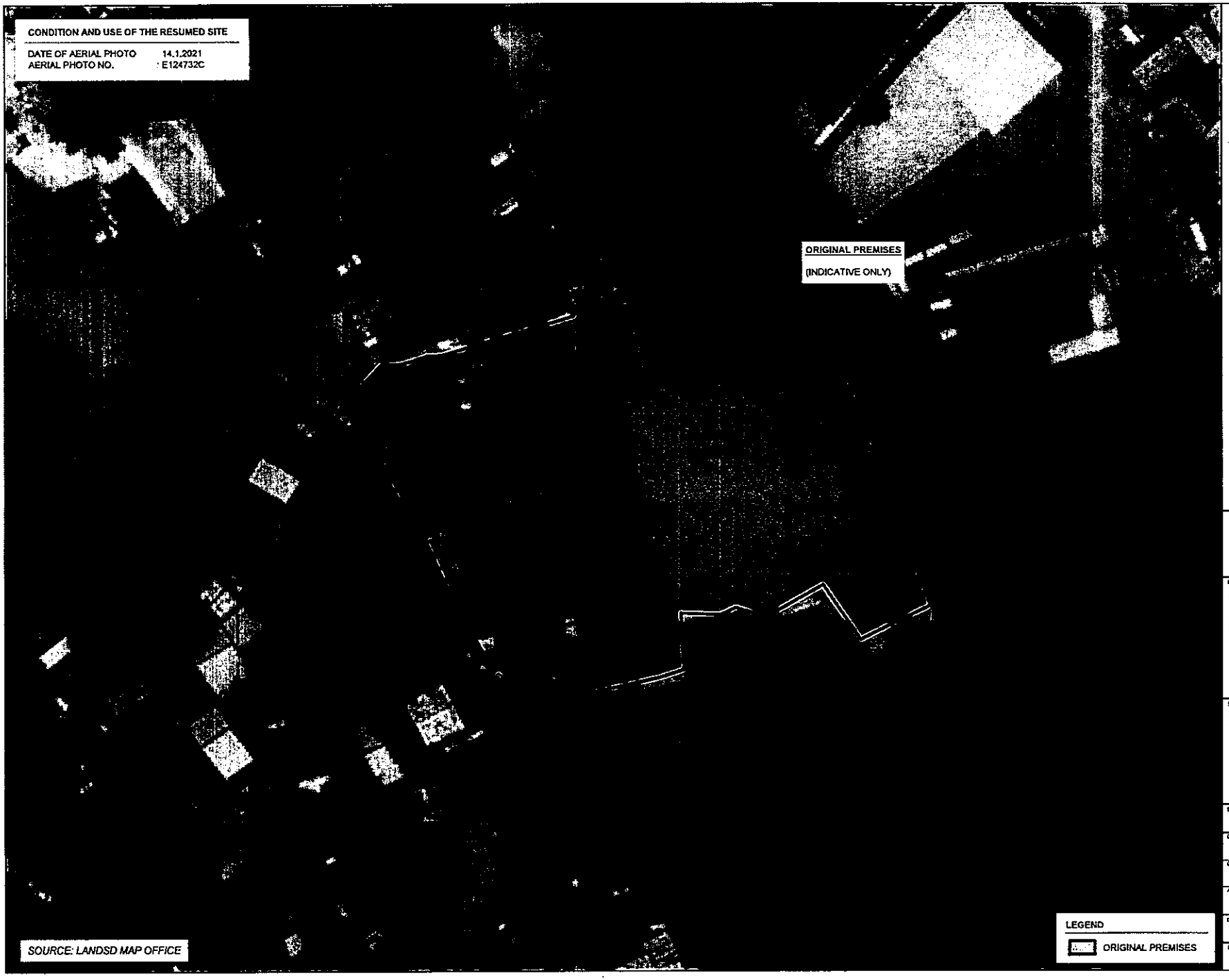


NORTH
W E
S

PLANNING CONSULTANT

R-Riches
Property Consultants Ltd.

PROJECT

PROPOSED TEMPORARY WAREHOUSE WITH ANCILLARY OFFICE AND CANTEEN FOR A PERIOD OF 3 YEARS AND ASSOCIATED FILLING OF LAND

SITE LOCATION

VARIOUS LOTS IN D.D. 99, CHAU TAU, NEW TERRITORIES

| | |
|---|---|
| SCALE | 1 : 700 @ A4 |
| DRAWN BY | MN |
| DATE | 30.1.2023 |
| CHECKED BY | |
| DATE | |
| APPROVED BY | |
| DATE | |
| DWG. TITLE | OP (AERIAL PHOTO) |
| DWG NO | PLAN 6 |
| VER. | 001 |

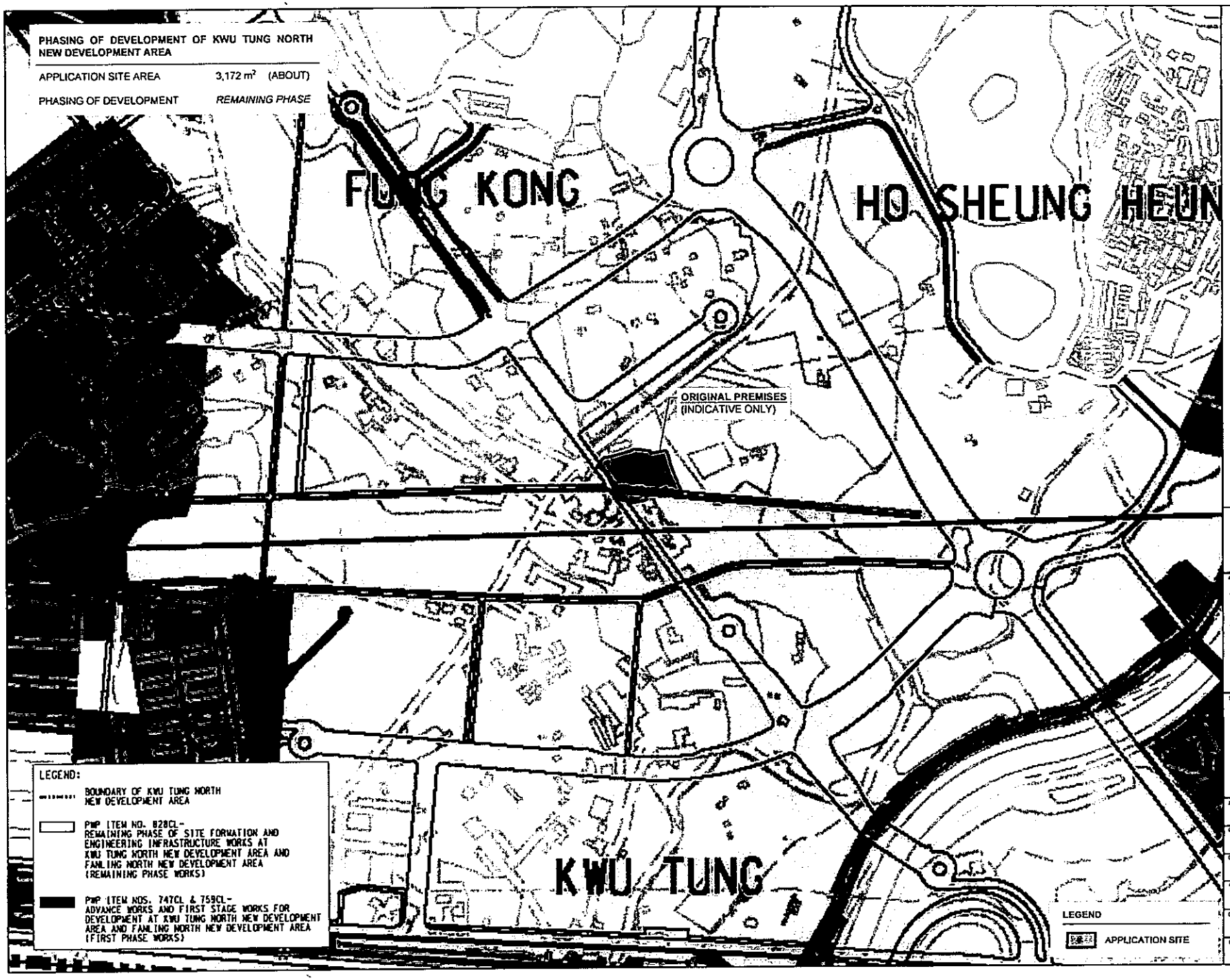


NORTH
W E
S

PLANNING CONSULTANT

R-Riches Property Consultants Ltd.

PROJECT

PROPOSED TEMPORARY WAREHOUSE WITH ANCILLARY OFFICE AND CANTEEN FOR A PERIOD OF 3 YEARS AND ASSOCIATED FILLING OF LAND

SITE LOCATION

VARIOUS LOTS IN D.D. 99, CHAU TAU, NEW TERRITORIES

| | |
|---|---|
| SCALE 1 : 5000 @ A4 | |
| DRAWN BY MN | DATE 30.1.2023 |
| CHECKED BY | DATE |
| APPROVED BY | DATE |
| DWG TITLE OP (KTN NDA IMP. PHASING) | |
| DWG NO PLAN 7 | VER 001 |

**LOCATION OF THE APPLICANT'S ORIGINAL PREMISES**

VARIOUS LOTS IN D.D. 95, KWU TUNG, NEW TERRITORIES

**LOCATION OF THE APPLICATION SITE**

VARIOUS LOTS IN D.D. 99, SAN TIN, NEW TERRITORIES

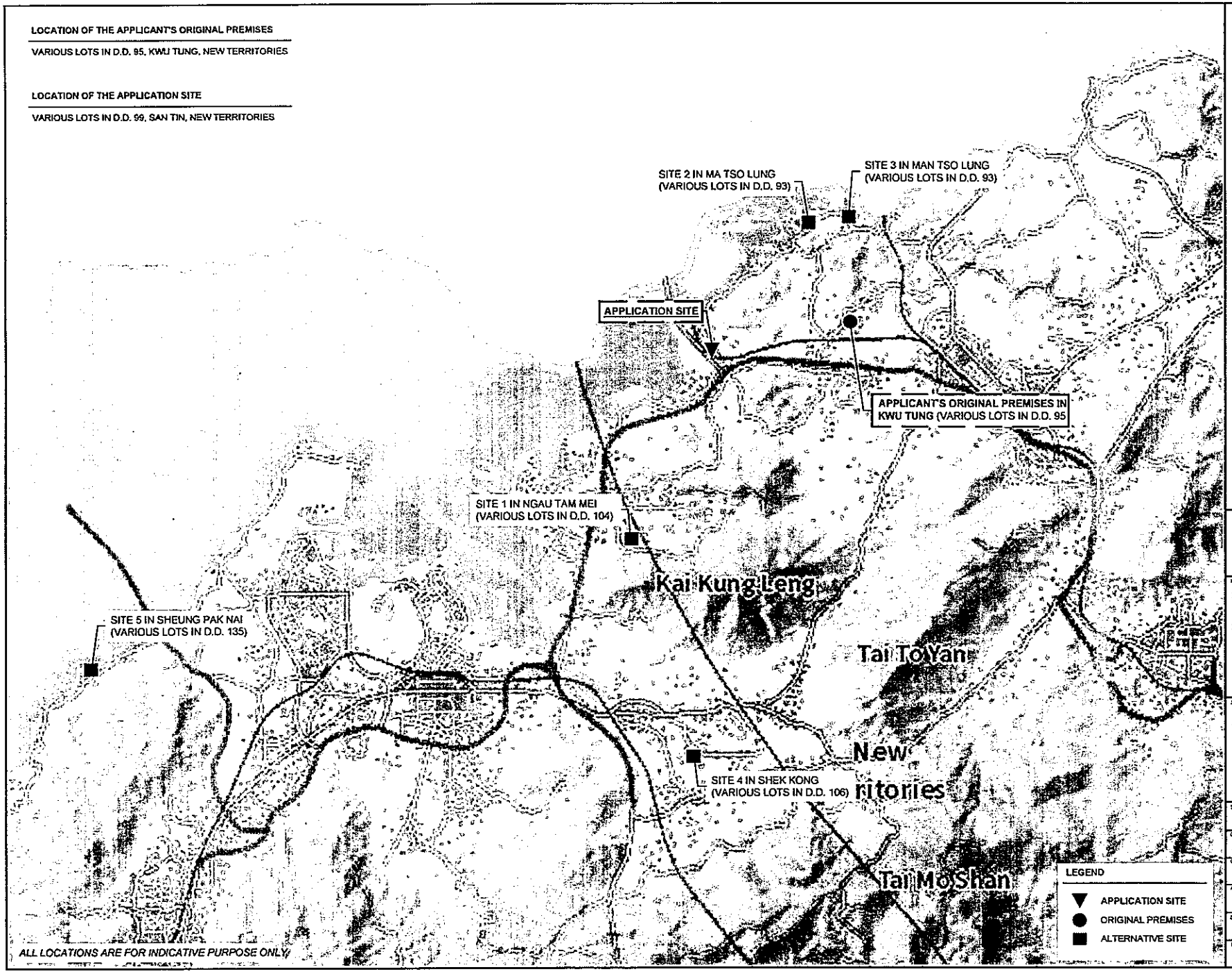


*ALL LOCATIONS ARE FOR INDICATIVE PURPOSE ONLY*

PLANNING CONSULTANT

R-Riches Property Consultants Ltd.

PROJECT

PROPOSED TEMPORARY WAREHOUSE WITH ANCILLARY OFFICE AND CANTEEN FOR A PERIOD OF 3 YEARS AND ASSOCIATED FILLING OF LAND

SITE LOCATION

VARIOUS LOTS IN D.D. 99, CHAU TAU, NEW TERRITORIES

| | |
|---|---|
| SCALE | INDICATIVE ONLY |
| DRAWN BY | MN |
| DATE | 13.4.2023 |
| CHECKED BY | |
| DATE | |
| APPROVED BY | |
| DATE | |
| DWG. TITLE | ALTERNATIVE SITES |
| DWG NO. | PLAN 8 |
| VER. | 001 |

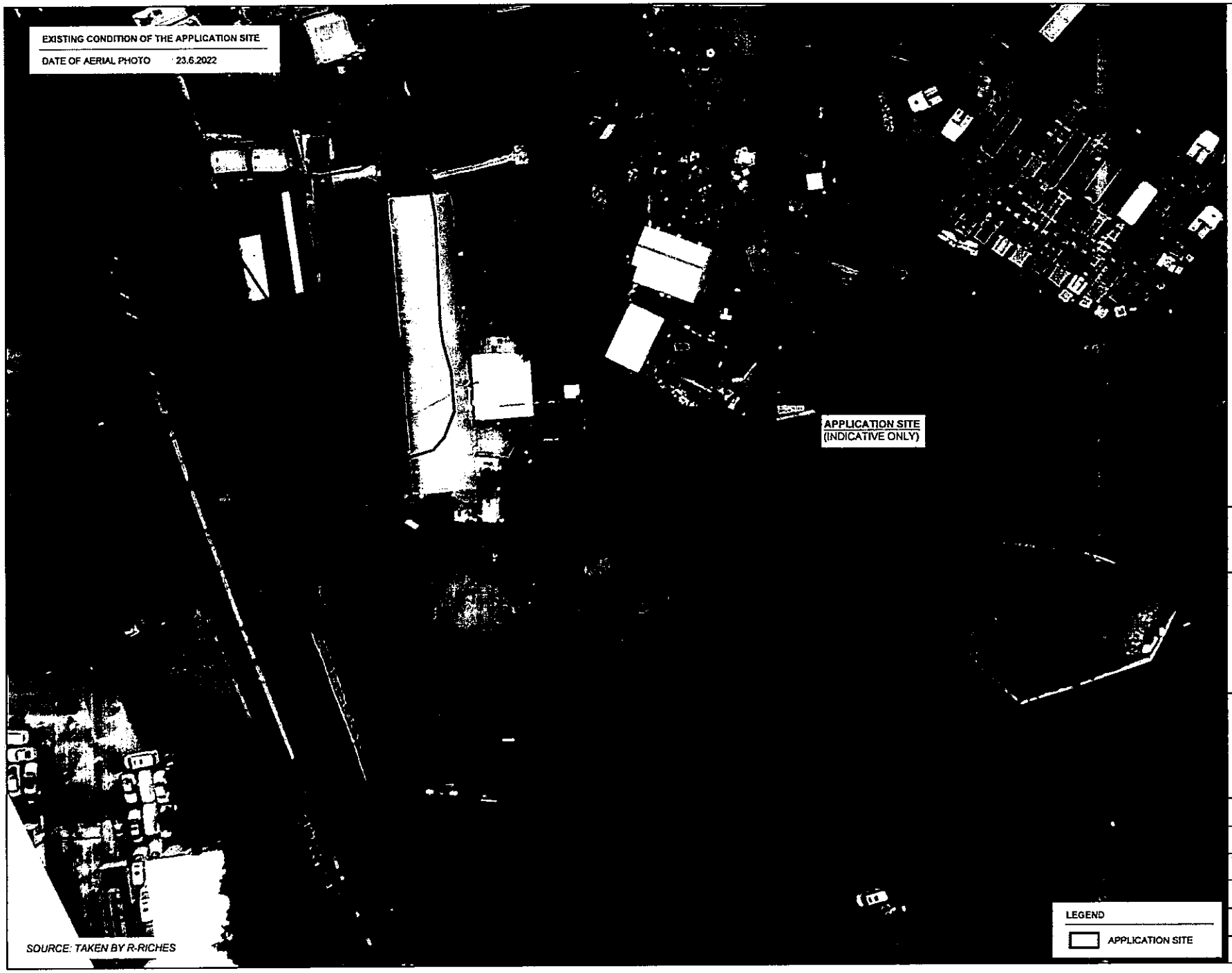


SOURCE: TAKEN BY R-RICHES

NORTH
W E
S

PLANNING CONSULTANT

R-Riches
Property Consultants Ltd.

PROJECT

PROPOSED TEMPORARY WAREHOUSE WITH ANCILLARY OFFICE AND CANTEEN FOR A PERIOD OF 3 YEARS AND ASSOCIATED FILLING OF LAND

SITE LOCATION

VARIOUS LOTS IN D.D. 99, CHAU TAU, NEW TERRITORIES

| | |
|---|---|
| SCALE | 1 : 700 @ A4 |
| DRAWN BY | MN |
| DATE | 2.2.2023 |
| CHECKED BY | |
| DATE | |
| APPROVED BY | |
| DATE | |
| DWG TITLE | AERIAL PHOTO OF THE SITE |
| DWG NO | PLAN 9 |
| VER | 001 |

**DEVELOPMENT PARAMETERS**

| | | |
|---|---|---|
| APPLICATION SITE AREA | : 4,242 $m^2$ | (ABOUT) |
| COVERED AREA | : 1,781 $m^2$ | (ABOUT) |
| UNCOVERED AREA | 2,461 $m^2$ | (ABOUT) |
| PLOT RATIO | 0.84 | (ABOUT) |
| SITE COVERAGE | 42 % | (ABOUT) |
| NO. OF STRUCTURE | 2 | |
| DOMESTIC GFA | NOT APPLICABLE | |
| NON-DOMESTIC GFA | : 3,562 $m^2$ | (ABOUT) |
| TOTAL GFA | : 3,562 $m^2$ | (ABOUT) |
| BUILDING HEIGHT | . 8 m - 11 m | (ABOUT) |
| NO. OF STOREY | 2 | |

| STRUCTURE | | USE | COVERED AREA | GFA | BUILDING HEIGHT |
|---|---|---|---|---|---|
| B1 | (G/F) | WAREHOUSE (EXCL. DANGEROUS GOODS GODOWN) | 1,673$m^2$ (ABOUT) | 1,673 $m^2$ (ABOUT) | 11 m (ABOUT)(2-STOREY) |
| | (1/F) | WAREHOUSE (EXCL. DANGEROUS GOODS GODOWN) | | 1,673 $m^2$ (ABOUT) | |
| B2 | (G/F) | ANCILLARY CANTEEN | 108 $m^2$ (ABOUT) | 108 $m^2$ (ABOUT) | 8 m (ABOUT)(2-STOREY) |
| | (1/F) | ANCILLARY OFFICE | | 108 $m^2$ (ABOUT) | |
| | | TOTAL | 1,781 $m^2$ (ABOUT) | 3,562 $m^2$ (ABOUT) | |

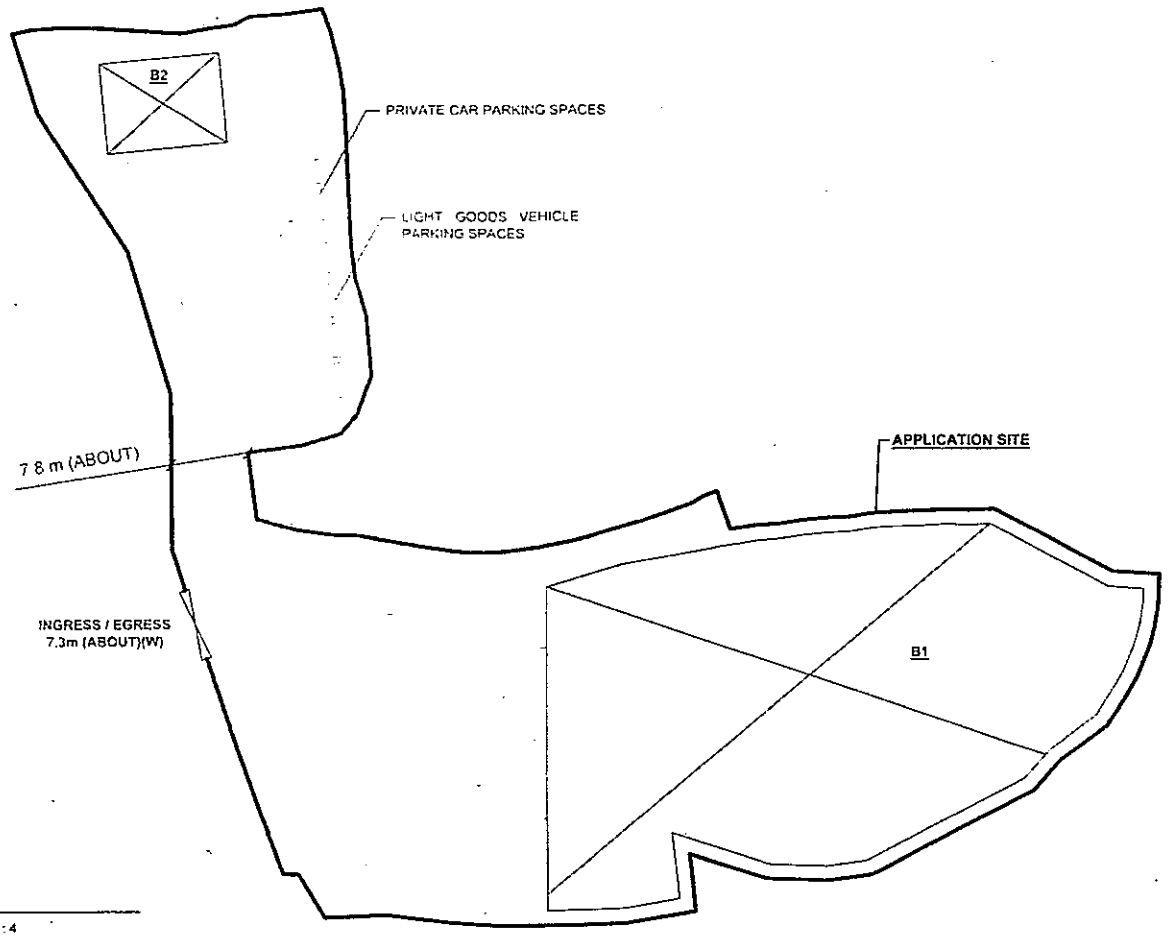


**PARKING AND LOADING/UNLOADING PROVISIONS**

| | |
|---|---|
| NO. OF PRIVATE CAR PARKING SPACE | : 4 |
| DIMENSIONS OF PARKING SPACE | . 5 m (L) X 2.5 m (W) |
| NO. OF LIGHT GOODS VEHICLE PARKING SPACE | . 3 |
| DIMENSION OF PARKING SPACE | : 7 m (L) X 3.5 m (W) |
| NO. OF L/UL SPACE FOR LIGHT GOODS VEHICLE | : 2 |
| DIMENSION OF L/UL SPACE | : 7 m (L) X 3.5 m (W) |
| NO. OF L/UL SPACE FOR CONTAINER VEHICLE | : 1 |
| DIMENSION OF L/UL SPACE | : 16 m (L) X 3.5 m (W) |

**LEGEND**

- APPLICATION SITE
- STRUCTURE
- PARKING SPACE
- L/UL SPACE
- INGRESS / EGRESS

NORTH
W E
S

PLANNING CONSULTANT

R-Riches Property Consultants Ltd.

PROJECT

PROPOSED TEMPORARY WAREHOUSE WITH ANCILLARY OFFICE AND CANTEEN FOR A PERIOD OF 3 YEARS AND ASSOCIATED FILLING OF LAND

SITE LOCATION

VARIOUS LOTS IN D.D. 99, CHAU TAU, NEW TERRITORIES

| | |
|---|---|
| SCALE 1 : 700 @ A4 | |
| DRAWN BY MN | DATE 30.1.2023 |
| CHECKED BY OL | DATE 25.4.2023 |
| APPROVED BY | DATE |
| DWG TITLE LAYOUT PLAN | |
| DWG NO PLAN 10 | VER 001 |

**PAVED RATIO OF THE APPLICATION SITE**

| | | |
|---|---|---|
| APPLICATION SITE AREA | 4,242 m² | (ABOUT) |
| COVERED BY STRUCTURE | 1,781 m² | (ABOUT) |
| LAND FILLING AREA | 4,242 m² | (ABOUT) |
| PROPOSED SITE LEVEL | +4.5 mPD to 5.5 mPD | (ABOUT) |
| DEPTH OF LAND FILLING | NOT MORE THAN 1.6 m | |
| MATERIAL OF LAND FILLING | CONCRETE | |
| PURPOSE OF LAND FILLING | SITE FORMATION OF STRUCTURES, PARKING AND CIRCULATION SPACE | |

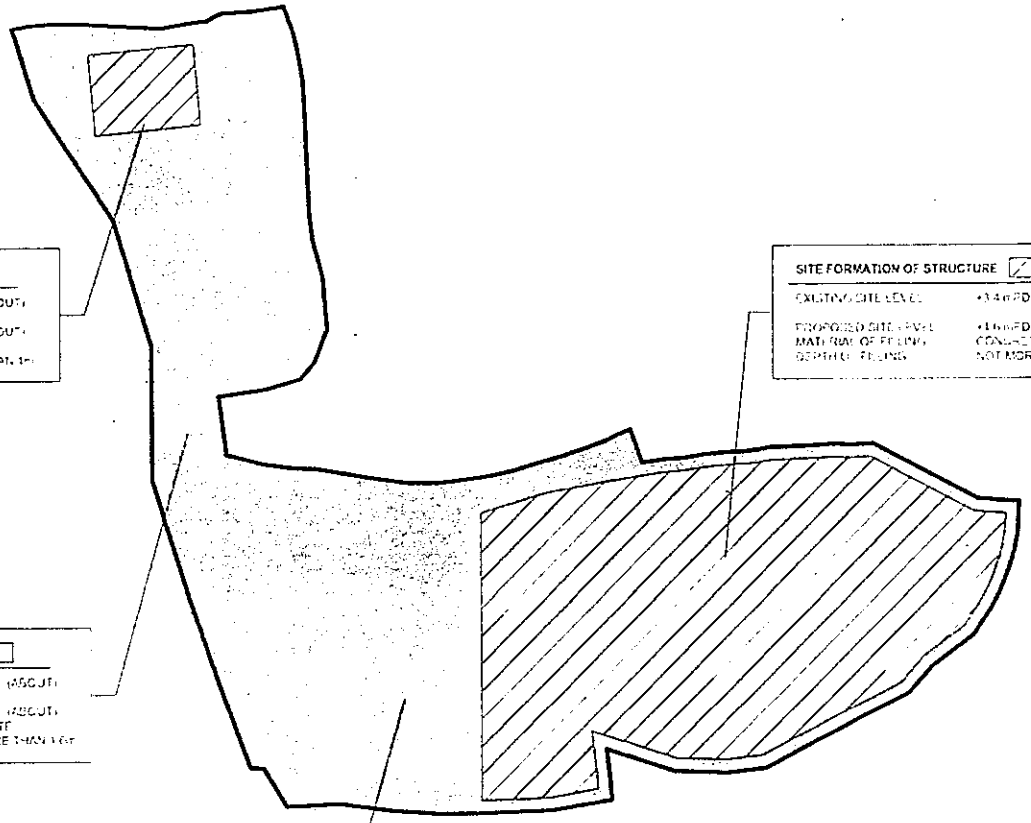

**SITE FORMATION OF STRUCTURE**

| | |
|---|---|
| EXISTING SITE LEVEL | +4.5 mPD (ABOUT) |
| PROPOSED SITE LEVEL | +5.5 mPD (ABOUT) |
| MATERIAL OF FILLING | CONCRETE |
| DEPTH OF FILLING | NOT MORE THAN 1m |

**SITE FORMATION OF STRUCTURE**

| | |
|---|---|
| EXISTING SITE LEVEL | +3.4 mPD (ABOUT) |
| PROPOSED SITE LEVEL | +4.6 mPD (ABOUT) |
| MATERIAL OF FILLING | CONCRETE |
| DEPTH OF FILLING | NOT MORE THAN 1.2m |

**CIRCULATION & PARKING SPACE**

| | |
|---|---|
| EXISTING SITE LEVEL | +3.4 mPD (ABOUT) |
| PROPOSED SITE LEVEL | +5.0 mPD (ABOUT) |
| MATERIAL OF FILLING | CONCRETE |
| DEPTH OF FILLING | NOT MORE THAN 1.6m |

**CIRCULATION & PARKING SPACE**

| | |
|---|---|
| EXISTING SITE LEVEL | +3.4 mPD (ABOUT) |
| PROPOSED SITE LEVEL | +4.5 mPD (ABOUT) |
| MATERIAL OF FILLING | CONCRETE |
| DEPTH OF FILLING | NOT MORE THAN 1 m |

**LEGEND**

- APPLICATION SITE
- INGRESS / EGRESS

*THIS PLAN IS FOR ILLUSTRATION PURPOSE ONLY*
*EXACT SITE LEVEL IS SUBJECT TO DETAIL SURVEY*

NORTH
W E
S

PLANNING CONSULTANT
R-Riches Property Consultants Ltd.

PROJECT
PROPOSED TEMPORARY WAREHOUSE WITH ANCILLARY OFFICE AND CANTEEN FOR A PERIOD OF 3 YEARS AND ASSOCIATED FILLING OF LAND

SITE LOCATION
VARIOUS LOTS IN D.D. 99, CHAU TAU, NEW TERRITORIES

| | |
|---|---|
| SCALE 1 : 800 @ A4 | |
| DRAWN BY MN | DATE 30.1.2023 |
| CHECKED BY OL | DATE 25.4.2023 |
| APPROVED BY | DATE |
| DWG TITLE LAND FILLING AREA | |
| DWG NO PLAN 11 | VER 001 |

PWP ITEM NO. 7856 CL

DEVELOPMENT OF LOK MA CHAU LOOP – MAIN WORKS PACKAGE 1 – SITE FORMATION AND INFRASTRUCTURE WORKS

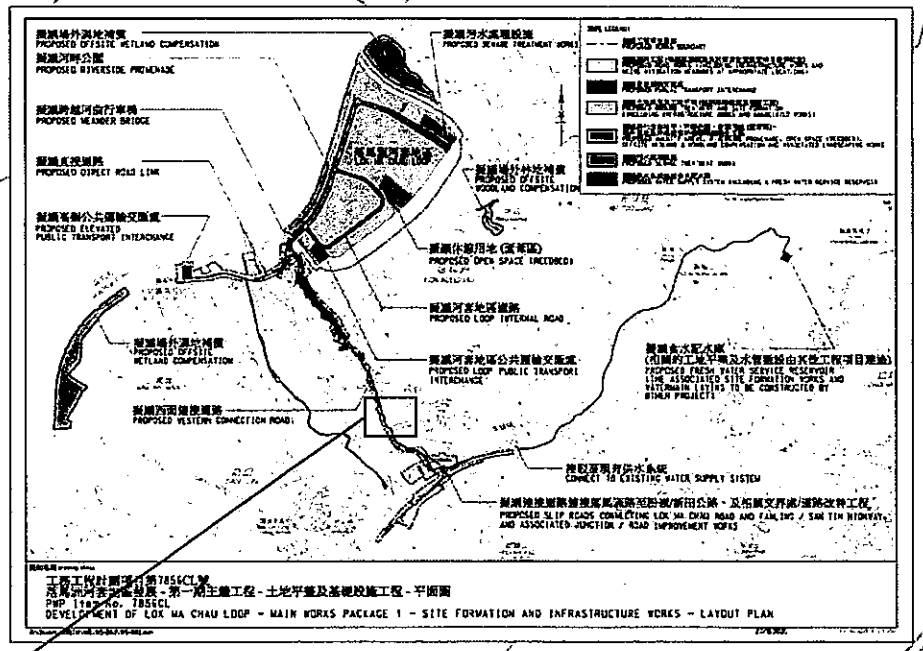


APPLICATION SITE
(INDICATIVE ONLY)

A PROPER RUN-IN/OUT WILL BE IMPLEMENTED BY CEDD UNDER PWP ITEM NO. 7856CL

LEGEND

APPLICATION SITE

NORTH

W E

S

PLANNING CONSULTANT

R-Riches Property Consultants Ltd.

PROJECT

PROPOSED TEMPORARY WAREHOUSE WITH ANCILLARY OFFICE AND CANTEEN FOR A PERIOD OF 3 YEARS AND ASSOCIATED FILLING OF LAND

SITE LOCATION

VARIOUS LOTS IN D.D. 99, CHAU TAU, NEW TERRITORIES

| | |
|---|---|
| SCALE | 1 : 10000 @ A4 |
| DRAWN BY | MN |
| DATE | 2.2.2023 |
| CHECKED BY | |
| DATE | |
| APPROVED BY | |
| DATE | |
| DWG. TITLE | RUN-IN/OUT OF THE SITE |
| DWG NO | PLAN 12 |
| VER. | 001 |

SWEPT PATH ANALYSIS

| | |
|---|---|
| TYPE OF VEHICLE | CONTAINER VEHICLE |
| DIMENSION OF VEHICLE | 2.5 m (W) X 16 m (L) |

*SWEPT PATHS GENERATED BY AUTODESK VEHICLE TRACKING 2010*

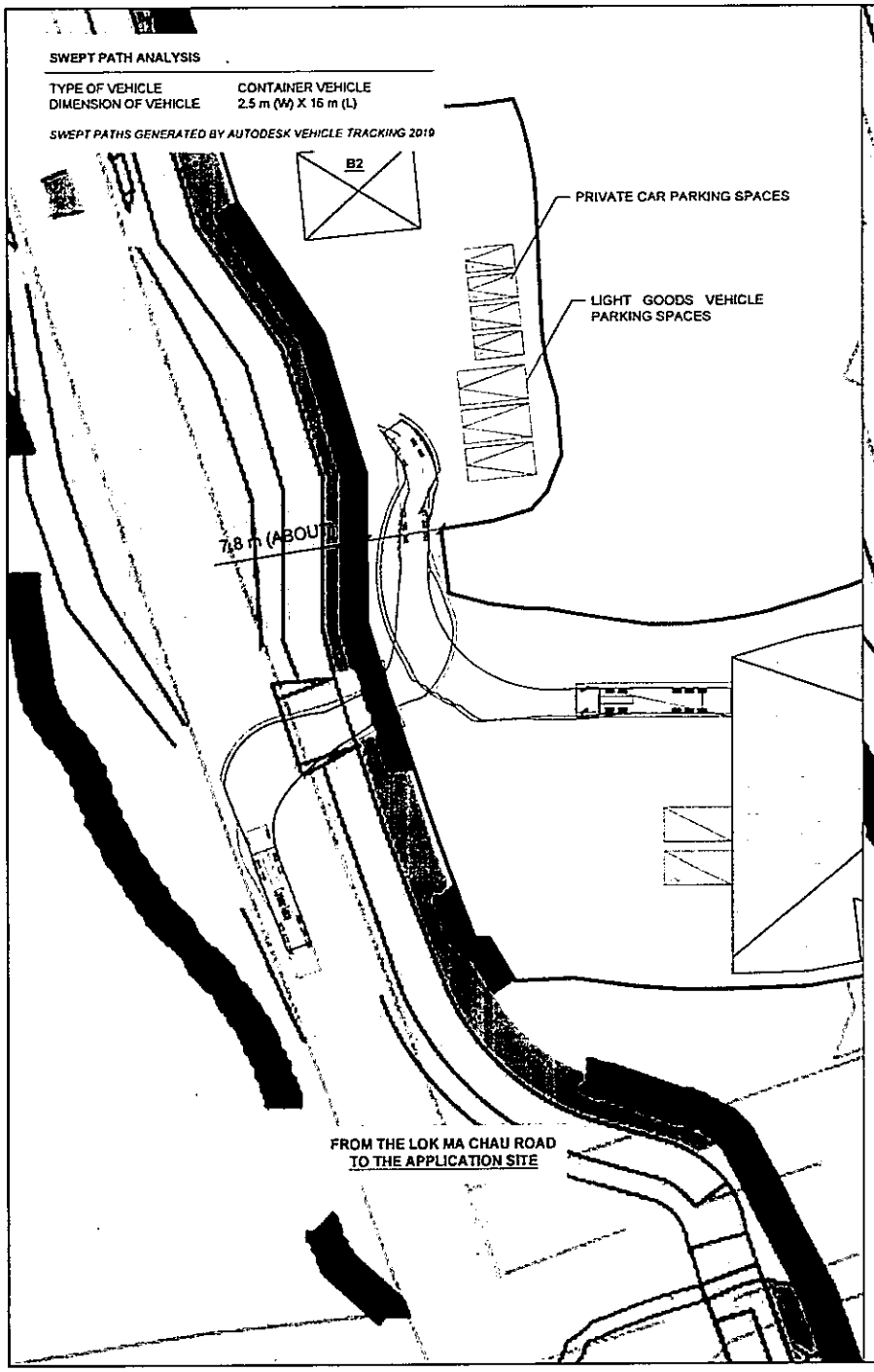


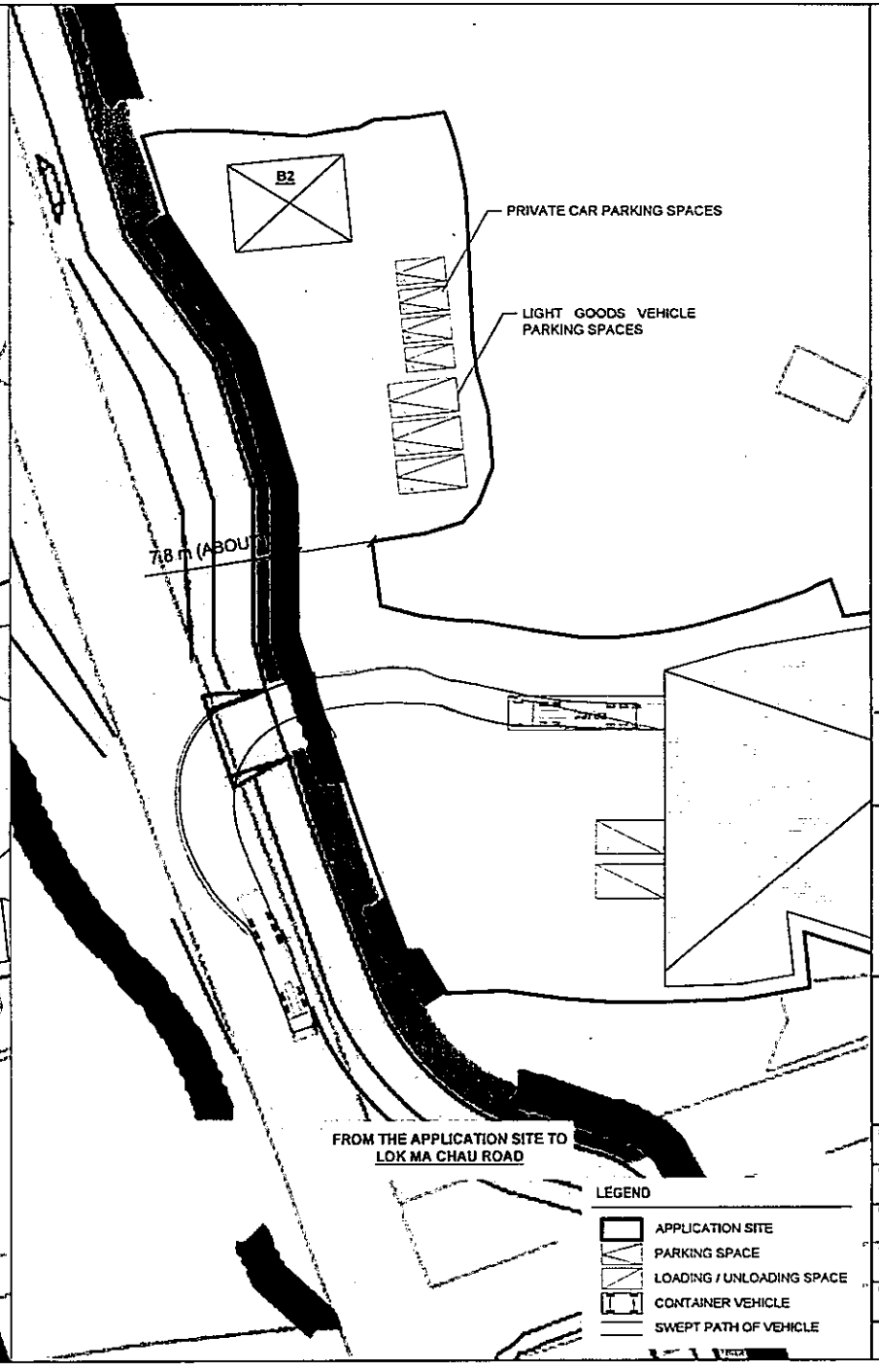


LEGEND

- APPLICATION SITE
- PARKING SPACE
- LOADING / UNLOADING SPACE
- CONTAINER VEHICLE
- SWEPT PATH OF VEHICLE

NORTH

W E S

PLANNING CONSULTANT

R-Riches Property Consultants Ltd.

PROJECT

PROPOSED TEMPORARY WAREHOUSE WITH ANCILLARY OFFICE AND CANTEEN FOR A PERIOD OF 3 YEARS AND ASSOCIATED FILLING OF LAND

SITE LOCATION

VARIOUS LOTS IN D.D. 99, CHAU TAU, NEW TERRITORIES

| | |
|---|---|
| SCALE 1 : 700 @ A4 | |
| DRAWN BY MN | DATE 2.2.2023 |
| CHECKED BY | DATE |
| APPROVED BY | DATE |
| DWG. TITLE SWEPT PATH ANALYSIS | |
| DWG NO PLAN 13 | VER 001 |

## APPENDICES

| | |
|---|---|
| **Appendix I** | Alternative Sites for Relocation |
| **Appendix II** | Drainage Proposal |
| **Appendix III** | Fire Service Installations Proposal |

**Appendix I**

Alternative Sites for Relocation

**Appendix I – Alternative Site Options for Relocation of the Applicant's Original Premises**

| Alternative Site / Application Site | Site 1 | Site 2 | Site 3 | Site 4 | Site 5 | Application Site |
|---|---|---|---|---|---|---|
| Location | Various Lots in D.D. 104, Ngau Tam Mei, Yuen Long, New Territories | Various Lots in D.D. 93, Ma Tso Lung, New Territories | Various Lots in D.D. 93, Ma Tso Lung, New Territories | Various Lots in D.D. 106, Shek Kong, Yuen Long, New Territories | Various Lots in D.D. 135, Sheung Pak Nai, Yuen Long, New Territories | Various Lots in D.D. 99, Chau Tau, New Territories |
| Site Area | 3,930 m² (about) | 30,190 m² (about) | 5,500 m² (about) | 540 m² (about) | 13,320 m² (about) | 4,242m² (about) |
| Accessibility | Accessible from Wang Ping Shan South Road via a local access | Accessible from Ma Tso Lung Road via a local access | Accessible from Ma Tso Lung Road via a local access | Accessible from Kam Shui Road via a local access | Accessible from Nim Wan Road via a local access | Accessible from Lok Ma Chau Road via a local access |
| Distance from Original Premises | 7.81km (about) from the original premises | 3.07km (about) from the original premises | 3.75km (about) from the original premises | 13.51km (about) from the original premises | 22.2km (about) from the original premises | 2.8km (about) from the original premises |
| Outline Zoning Plan | Draft Kam Tin North OZP No. S/YL-KTN/10 | Approved Ma Tso Lung and Hoo Hok Wai OZP No. S/NE-MTL/3 | Approved Ma Tso Lung and Hoo Hok Wai OZP No. S/NE-MTL/3 | Approved Shek Kong OZP No. S/YL-SK/9 | Approved Sheung Pak Nai and Ha Pak Nai OZP No. S/YL-PN/9 | Approved San Tin OZP No. S/YL-ST/8 |
| Zoning | "Village Type Development" | "Conservation Area (1)" | "Conservation Area (1)" | "Village Type Development" | "Coastal Protection Area" | "Green Belt" |
| Existing Condition | Hard paved and occupied by temporary structures | Mostly vacant, covered by vegetation and occupied by fishpond. | Vacant and covered by vegetation | Vacant and covered by temporary structures | Occupied by temporary structures and fishponds | Generally flat, partially covered by vegetation and occupied by vacant temporary structures |
| Surrounding Area | Surrounded by vehicle repair workshop, holiday camp site, and residential use | Surrounded by vegetation, pond, some GIC uses and residential use | Surrounded by vegetation, pond, some GIC uses and residential use | Surrounded by residential development, some GIC uses and temporary structures for plant nursery | Surrounded by fishpond and some temporary structures | Surrounded by vehicle park, temporary structures for storage, workshop and agricultural uses; and vacant land covered by vegetation and hard-paving |
| Suitability for Relocation | Not suitable for relocation<br>- 10% larger than the original premises<br>- Tree felling is required<br>- Nearby residential development<br>- Not compatible with the surrounding area | Not suitable for relocation<br>- 748% larger than the original premises<br>- Within the closed area<br>- Falls within the "Conservation Area" zone<br>- Tenancy for portion of the site is not feasible<br>- Not compatible with the surrounding area | Not suitable for relocation<br>- 54% larger than the original premises<br>- Within the closed area<br>- Falls within the "Conservation Area" zone<br>- Tenancy for portion of the site is not feasible<br>- Not compatible with the surrounding area | Not suitable for relocation<br>- 85% smaller than the original premises<br>- Tree felling is required<br>- Tenancy for portion of the site is not feasible<br>- Not compatible with the surrounding area | Not suitable for relocation<br>- 274% larger than the original premises<br>- Falls within the "Coastal Protection Area" zone<br>- Active agricultural activities<br>- Not compatible with the surrounding area | Suitable for relocation:<br>- Similar in site area<br>- No active agricultural activities<br>- Not incompatible with the surrounding area |

**Appendix II**

Drainage Proposal

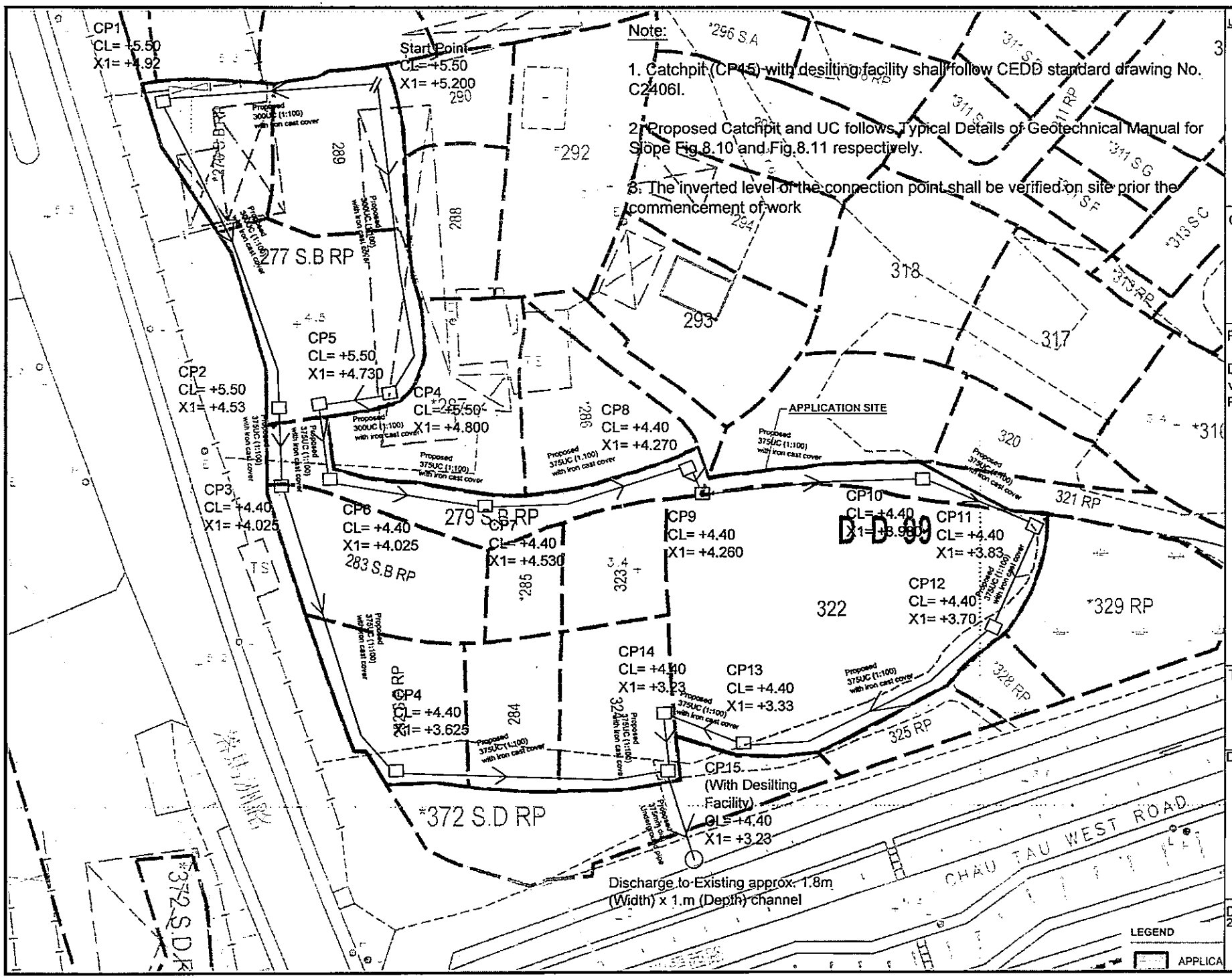


Legend:

- Proposed UC (1:100) with cast iron cover
- Existing Drain
- Proposed Catchpit

Company:

Project:

DD99 Lot 247 with various lots (Drainage Proposal)

Title:

Drainage layout

| Dwg No: | File: |
|---|---|
| Fig.1 | Lot 247 in D.D. 99 |

Date: 20 Jan 2023

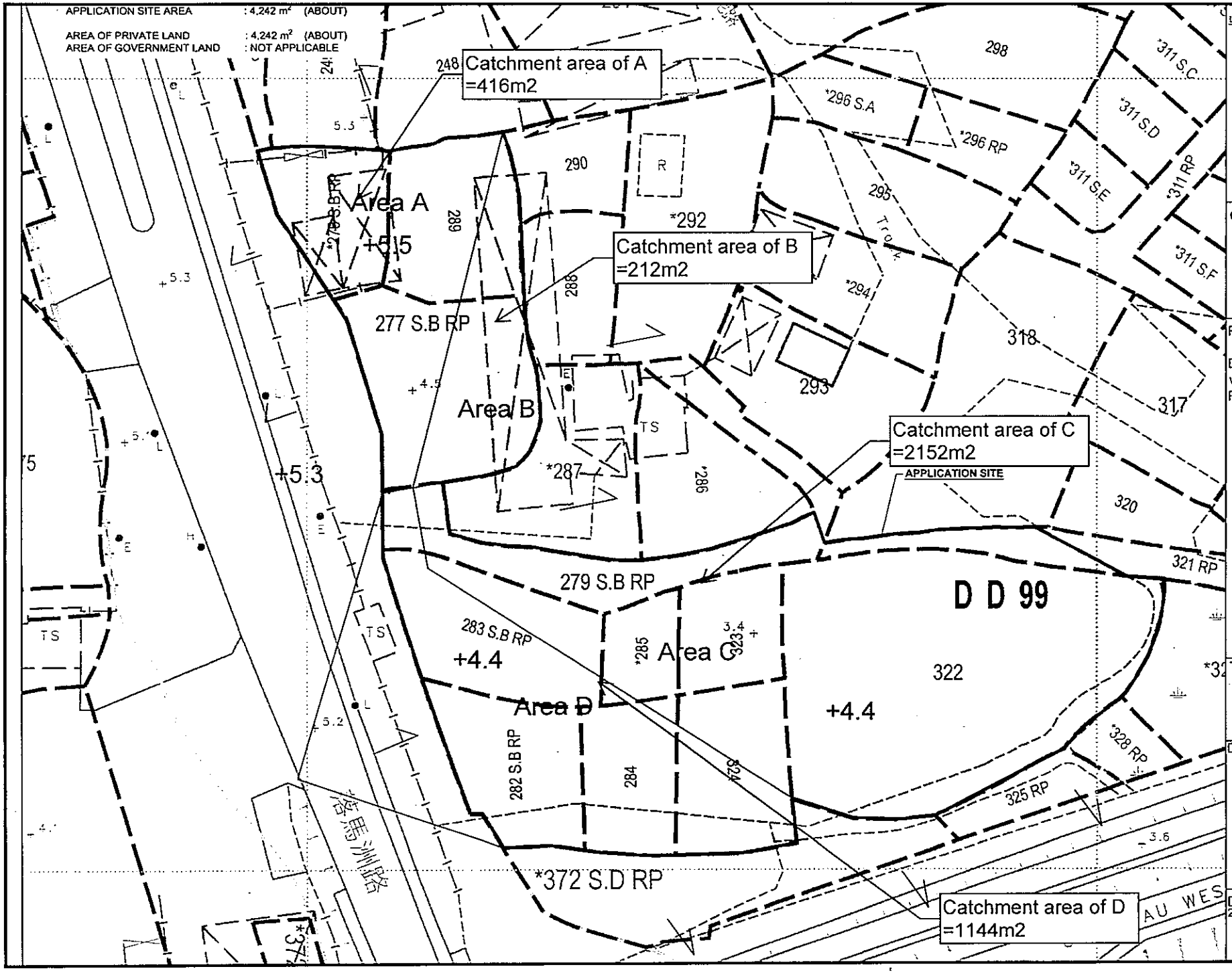


Legend:

- Proposed UC (1:100) with cast iron cover
- Existing Drain
- Proposed Catchpit

Company:

Project:

DD99 Lot 247 with various lots (Drainage Proposal)

Title:

Catchment Zone

| Dwg No: | File: |
|---|---|
| Fig.2 | Lot 247 in D.D. 99 |

Date: 20 Jan 2023

Company:
Project :

Date: 23/8/2018

Calculation for channels:

Catchment Area of site

| | | | | | | | | | | |
|---|---|---|---|---|---|---|---|---|---|---|
| Area A | = | 792 | m^2 | | | | | | | |
| | = | 0.000792 | km^2 | | | | | | | |
| Peak runoff in m^3/s | = | 0.278 | x | 0.95 | x | 250 | mm/hr | x | 0.000792 | km^2 |
| | = | 0.052292 | m^3/s | | | | | | | |
| | = | 3138 | liter/min | | | | | | | |
| Area B | = | 405 | m^2 | | | | | | | |
| | = | 0.000405 | km^2 | | | | | | | |
| Peak runoff in m^3/s | = | 0.278 | x | 0.95 | x | 250 | mm/hr | x | 0.000405 | km^2 |
| | = | 0.02674 | m^3/s | | | | | | | |
| | = | 1604 | liter/min | | | | | | | |
| Area C | = | 2567 | m^2 | | | | | | | |
| | = | 0.002567 | km^2 | | | | | | | |
| Peak runoff in m^3/s | = | 0.278 | x | 0.95 | x | 250 | mm/hr | x | 0.002567 | km^2 |
| | = | 0.169486 | m^3/s | | | | | | | |
| | = | 10169 | liter/min | | | | | | | |
| Area D | = | 1645 | m^2 | | | | | | | |
| | = | 0.001645 | km^2 | | | | | | | |
| Peak runoff in m^3/s | = | 0.278 | x | 0.95 | x | 250 | mm/hr | x | 0.001645 | km^2 |
| | = | 0.108611 | m^3/s | | | | | | | |
| | = | 6517 | liter/min | | | | | | | |

| | | | | | | |
|---|---|---|---|---|---|---|
| Total Peak Runoff for A | = | 0.052292 | m^3/s | = | 3137.508 | liter/min |
| Total Peak Runoff for A and D | = | 0.160903 | m^3/s | = | 9654.1755 | liter/min |
| Total Peak Runoff for B | = | 0.02674 | m^3/s | = | 1604.4075 | liter/min |
| Total Peak Runoff for B and C | = | 0.278097 | m^3/s | = | 16685.838 | liter/min |

According to (Figure 8.7 - Chart for the Rapid Design of Channels),
For gradient 1:100, 300UC will be suitable for area A and B
For gradient 1:100, 375UC will be suitable for area D
For gradient 1:100, 375UC will be suitable for area C

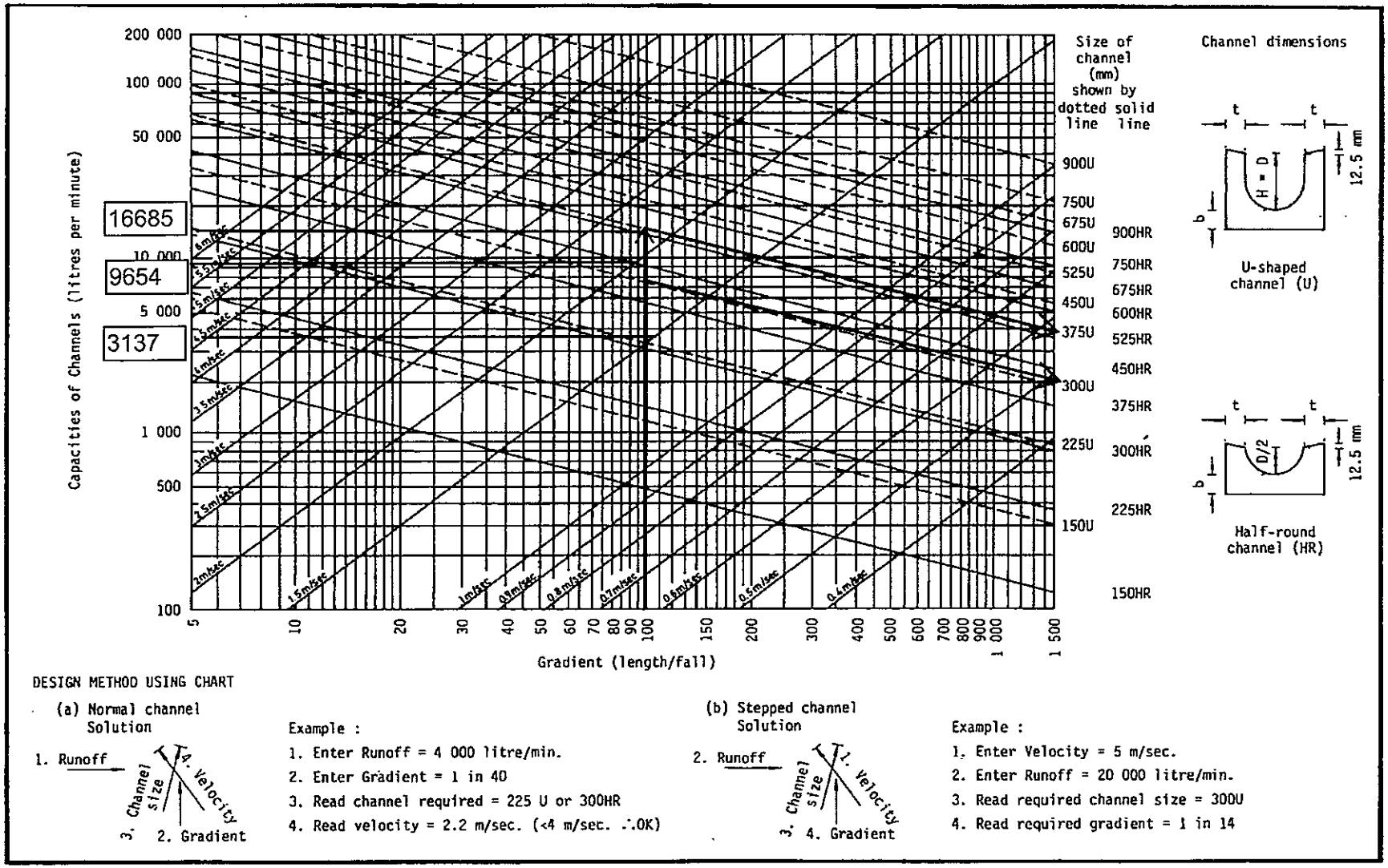


Figure 8.7 - Chart for the Rapid Design of Channels

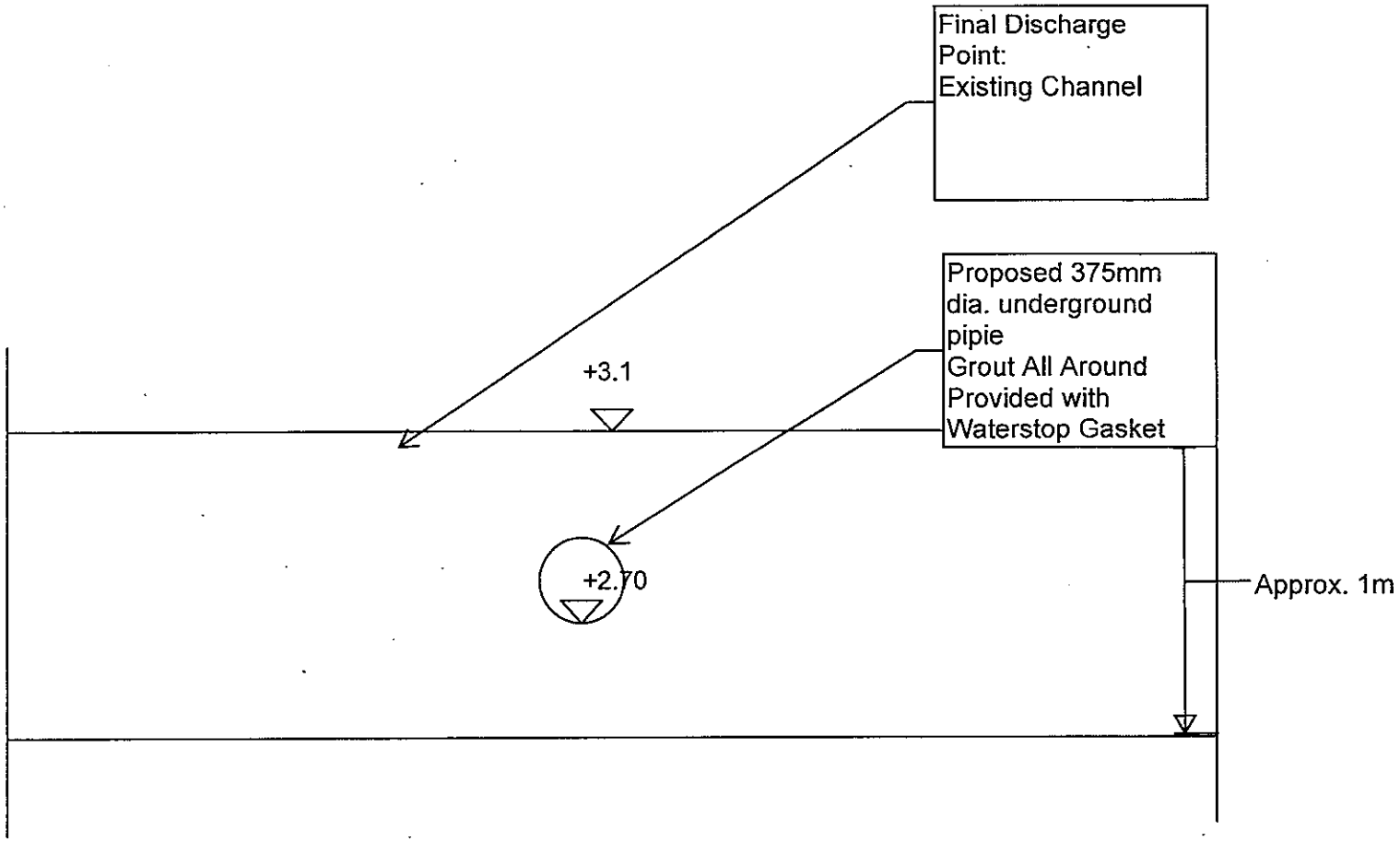


Connection Detail of Existing channel

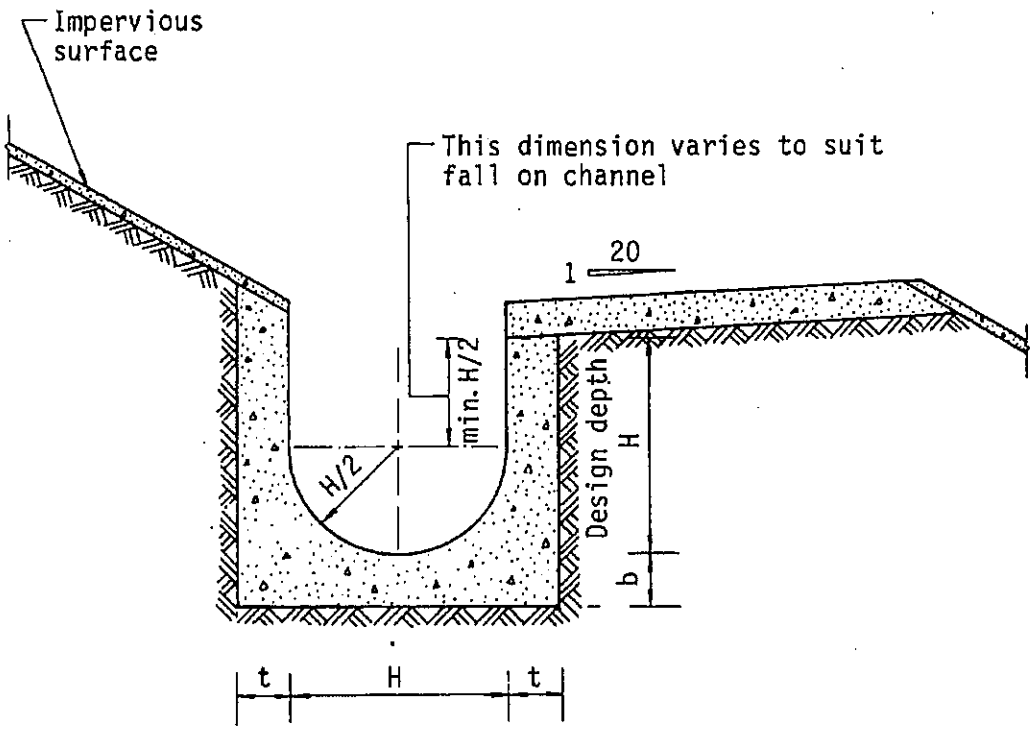


Dimensions of U - channel

| Nominal size of channel H (mm) | Thickness t (mm) | Thickness b (mm) |
|---|---|---|
| 225 to 600 | 150 | 150 |
| 675 to 1200 | 175 | 225 |

Figure 8.11 - Typical U-channel Details

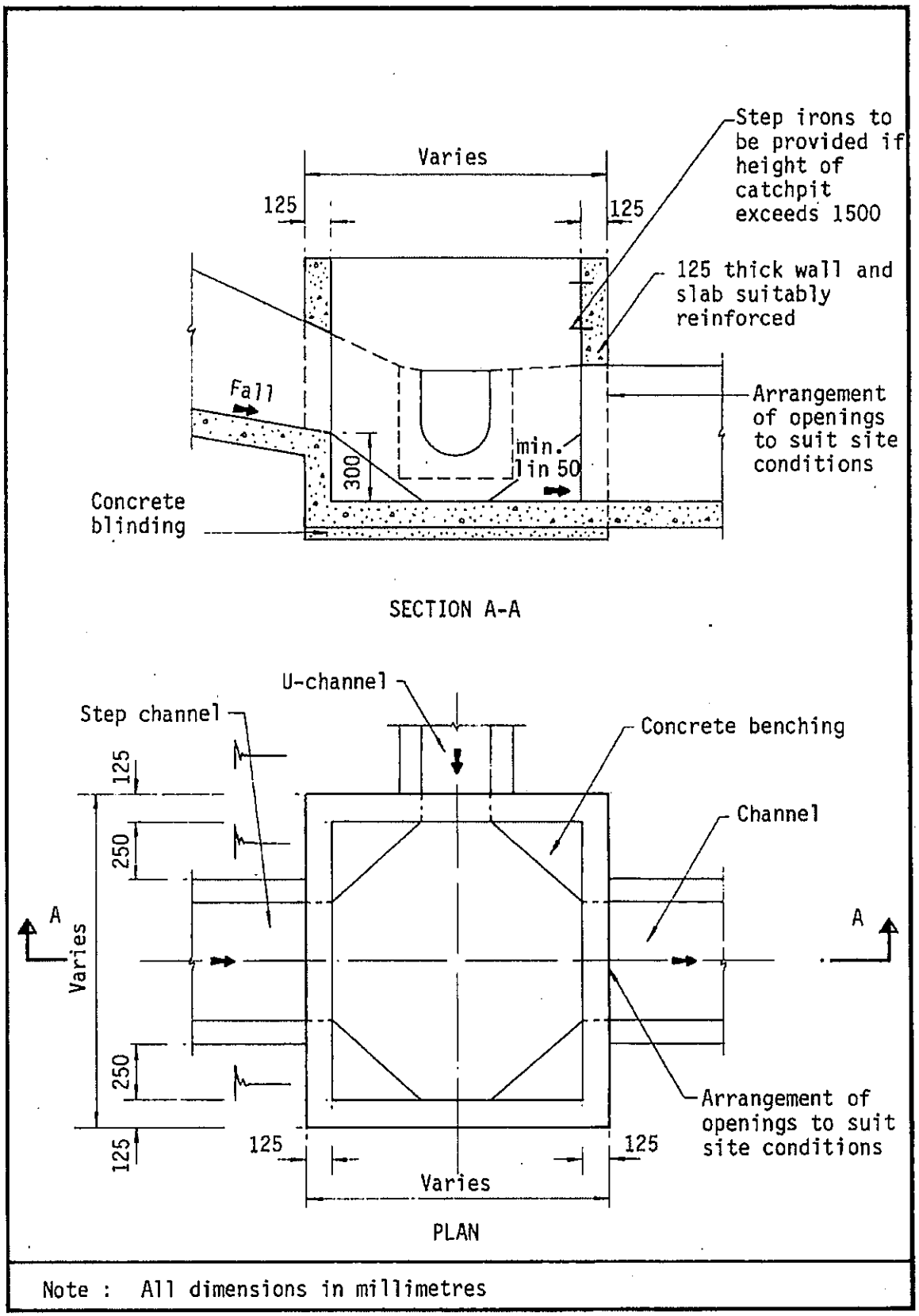


Note : All dimensions in millimetres

Figure 8.10 - Typical Details of Catchpits

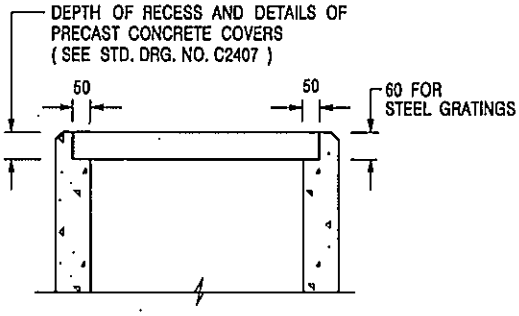


## ALTERNATIVE TOP SECTION FOR PRECAST CONCRETE COVERS / GRATINGS

NOTES:

1. ALL DIMENSIONS ARE IN MILLIMETRES.
2. ALL CONCRETE SHALL BE GRADE 20 /20.
3. CONCRETE SURFACE FINISH SHALL BE CLASS U2 OR F2 AS APPROPRIATE.
4. FOR DETAILS OF JOINT, REFER TO STD. DRG. NO. C2413.
5. CONCRETE TO BE COLOURED AS SPECIFIED.
6. UNLESS REQUESTED BY THE MAINTENANCE PARTY AND AS DIRECTED BY THE ENGINEER, CATCHPIT WITH TRAP IS NORMALLY NOT PREFERRED DUE TO PONDING PROBLEM.
7. UPON THE REQUEST FROM MAINTENANCE PARTY, DRAIN PIPES AT CATCHPIT BASE CAN BE USED BUT THIS IS FOR CATCHPITS LOCATED AT SLOPE TOE ONLY AND AS DIRECTED BY THE ENGINEER.
8. FOR CATCHPITS CONSTRUCTED ON OR ADJACENT TO A FOOTPATH, STEEL GRATINGS ( SEE DETAIL 'A' ON STD. DRG. NO. C2405 ) OR CONCRETE COVERS ( SEE STD. DRG. NO. C2407 ) SHALL BE PROVIDED AS DIRECTED BY THE ENGINEER.
9. IF INSTRUCTED BY THE ENGINEER, HANDRAILING ( SEE DETAIL 'G' ON STD. DRG. NO. C2405; EXCEPT ON THE UPSLOPE SIDE ) IN LIEU OF STEEL GRATINGS OR CONCRETE COVERS CAN BE ACCEPTED AS AN ALTERNATIVE SAFETY MEASURE FOR CATCHPITS NOT ON A FOOTPATH NOR ADJACENT TO IT. TOP OF THE HANDRAILING SHALL BE 1 000 mm MIN. MEASURED FROM THE ADJACENT GROUND LEVEL.
10. MINIMUM INTERNAL CATCHPIT WIDTH SHALL BE 1 000 mm FOR CATCHPITS WITH A HEIGHT EXCEEDING 1 000 mm MEASURED FROM THE INVERT LEVEL TO THE ADJACENT GROUND LEVEL. AND, STEP IRONS ( SEE DSD STD. DRG. NO. DS1043 ) AT 300 c/c STAGGERED SHALL BE PROVIDED. THICKNESS OF CATCHPIT WALL FOR INSTALLATION OF STEP IRONS SHALL BE INCREASED TO 150 mm.
11. FOR RETROFITTING AN EXISTING CATCHPIT WITH STEEL GRATING, SEE DETAIL 'F' ON STD. DRG. NO. C2405.
12. SUBJECT TO THE APPROVAL OF THE ENGINEER, OTHER MATERIALS CAN ALSO BE USED AS COVERS / GRATINGS.

| REF. | REVISION | SIGNATURE | DATE |
|---|---|---|---|
| - | FORMER DRG. NO. C2406J. | Original Signed | 03.2015 |

# CATCHPIT WITH TRAP (SHEET 2 OF 2)

CEDD CIVIL ENGINEERING AND DEVELOPMENT DEPARTMENT

SCALE 1 : 20

DATE JAN 1991

DRAWING NO. C2406 /2

卓越工程 建設香港

We Engineer Hong Kong's Development

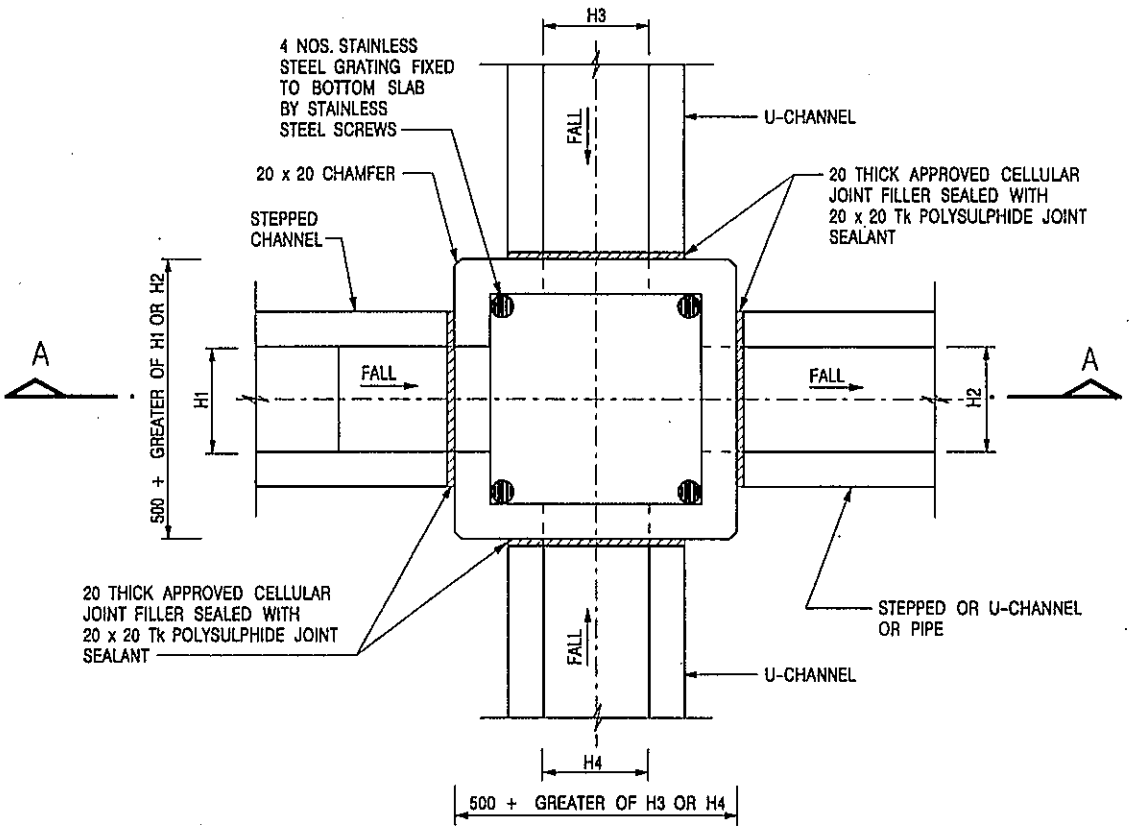


PLAN

| NOMINAL SIZE (LARGEST OF H1, H2, H3 & H4) | B |
|---|---|
| 300 – 600 | 150 |
| 675 – 900 | 175 |

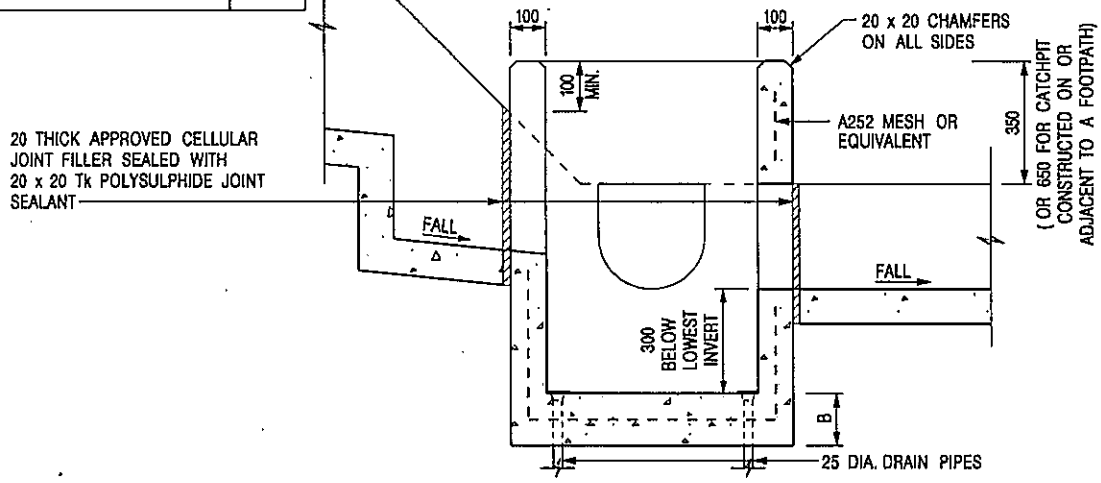


SECTION A – A

NOTES:

1. ALL DIMENSIONS ARE IN MILLIMETRES.
2. REFER TO SHEET 2 FOR OTHER NOTES.

| REF. | REVISION | SIGNATURE | DATE |
|---|---|---|---|
| – | FORMER DRG. NO. C2406J. | Original Signed | 03.2015 |

# CATCHPIT WITH TRAP

(SHEET 1 OF 2)

CEDD CIVIL ENGINEERING AND DEVELOPMENT DEPARTMENT

SCALE 1 : 20

DATE JAN 1991

DRAWING NO. C2406 /1

卓越工程 建設香港

We Engineer Hong Kong's Development

**Appendix III**

Fire Service Installations Proposal

**FIRE SERVICES NOTES:**

1. HOSE REEL SYSTEM

1.1 HOSE REEL SHALL BE PROVIDED AT POSITIONS AS INDICATED ON PLANS.
1.2 THERE SHALL BE SUFFICIENT HOSE REELS TO ENSURE THAT EVERY PART OF THE BUILDING CAN BE REACHED BY A LENGTH OF NOT MORE THAN 30M OF HOSE REEL TUBING. ONE ACTUATING POINT AND ONE AUDIO WARNING DEVICE TO BE LOCATED AT EACH HR POINT. THE ACTUATING POINT SHOULD INCLUDE FACILITIES FOR THE FIRE PUMP START DEVICE INITIATION.
1.3 A MODIFIED HOSE REEL SYSTEM OF 2,000 LITRES WATER TANK TO BE PROVIDED FOR THE ENTIRE BUILDING AS INDICATED ON PLAN.
1.4 NO FIRE SERVICES INLET TO BE PROVIDED FOR THE MODIFIED HOSE REEL SYSTEM.
1.5 WATER SUPPLY FOR THE MODIFIED HOSE REEL SYSTEM TO BE SINGLE END FEED FROM THE GOVERNMENT TOWN MAIN.
1.6 TWO FIXED FIRE PUMPS (DUTY/STANDBY) TO BE PROVIDED AT F.S. & SPR. PUMP ROOM.
1.7 THE HR SYSTEM INSTALLED SHOULD BE IN ACCORDANCE WITH PARA. 5.14 OF THE CODE OF PRACTICE FOR MINIMUM FIRE SERVICE INSTALLATION AND EQUIPMENT 2012.
1.8 AN INSTRUCTION PLATE SHALL BE PROVIDED NEXT TO THE BREAK GLASS UNIT FOR OPERATION OF HOSE REEL.

2. AUTOMATIC SPRINKLER SYSTEM

2.1 AUTOMATIC SPRINKLER SYSTEM SUPPLIED BY A 135,000L SPRINKLER WATER TANK AND HAZARD CLASS OH3 SHALL BE PROVIDED TO THE ENTIRE BUILDING/ STRUCTURE IN ACCORDANCE WITH LPC RULES INCORPORATING BS EN12845: 2015 AND FSD CIRCULAR LETTER 5/2020. THE SPRINKLER TANK, SPRINKLER PUMP ROOM, SPRINKLER INLET AND SPRINKLER CONTROL VALUE GROUP SHALL BE CLEARLY MARKED ON PLANS.
2.2 THE CLASSIFICATION OF THE AUTOMATIC SPRINKLER INSTALLATION TO BE ORDINARY HAZARD GROUP 3.
2.3 ONE NUMBER 135,000 LITRES SPRINKLER WATER TANK TO BE PROVIDED AS INDICATED ON PLANS.
2.4 SPRINKLER CONTROL VALVE SET AND SPRINKLER INLET TO BE PROVIDED AS INDICATED ON PLANS.
2.5 TYPE OF STORAGE METHOD FOR THE BUILDING IS AS FOLLOWS:
(A) STORAGE CATEGORY: CATEGORY (I)
(B) STORAGE HEIGHT: NOT EXCEEDING 4M
(C) STORAGE: ST1

3. FIRE ALARM SYSTEM

3.1 FIRE ALARM SYSTEM SHALL BE PROVIDED THROUGHOUT THE ENTIRE BUILDING IN ACCORDANCE WITH BS 5839-1: 2017 AND FSD CIRCULAR LETTER N0.6/2021. ONE ACTUATING POINT AND ONE AUDIO WARNING DEVICE SHOULD BE LOCATED AT EACH HOSE REEL POINT. THE ACTUATION POINT SHOULD INCLUDE FACILITIES FOR FIRE PUMP START AND AUDIO / VISUAL WARNING DEVICE INITIATION.
3.2 AN ADDRESSABLE TYPE FIRE ALARM PANEL TO BE PROVIDED AND LOCATED INSIDE G/F F.S. & SPR. PUMP ROOM.

4. MISCELLANEOUS F.S. INSTALLATION

4.1 PORTABLE FIRE EXTINGUISHER WITH SPECIFIED TYPE AND CAPACITY TO BE PROVIDED AT LOCATIONS AS INDICATED ON PLANS.
4.2 SUFFICIENT EMERGENCY LIGHTING SHALL BE PROVIDED THROUGHOUT THE ENTIRE BUILDINGS/STRUCTURES IN ACCORDANCE WITH BS 5266-1:20216, BS EN 1838:2013 AND FSD CL 4/2021.
4.3 SUFFICIENT DIRECTIONAL AND EXIT SIGN SHALL BE PROVIDED IN ACCORDANCE WITH BS 5266: PART 1 AND FSD CIRCULAR LETTER 5/2008.
4.4 NO EMERGENCY GENERATOR TO BE PROVIDED FOR SERVING THE EMERGENCY POWER. DUPLICATED POWER SUPPLIES FOR ALL FIRE SERVICES INSTALLATIONS COMPRISING A CABLE CONNECTED FROM ELECTRICITY MAINS DIRECTLY BEFORE THE MAIN SWITCH.
4.5 WHEN A VENTILATION/ AIR CONDITIONING CONTROL SYSTEM TO A BUILDING IS PROVIDED, IT SHALL STOP MECHANICALLY INDUCED AIR MOVEMENT WITHIN A DESIGNATED FIRE COMPARTMENT.
4.6 NO DYNAMIC SMOKE EXTRACTION SYSTEM SHALL BE PROVIDED SINCE FIRE COMPARTMENT EXCEEDING 7000 CUBIC METRES AND THE AGGREGATE AREA OF OPENABLE WINDOWS OF THE RESPECTIVE COMPARTMENT EXCEEDS 6.25% OF THE FLOOR AREA OF THAT COMPARTMENT.

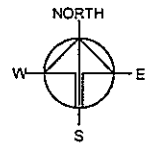


PLANNING CONSULTANT
R-Riches Property Consultants Ltd

PROJECT
PROPOSED TEMPORARY WAREHOUSE WITH ANCILLARY OFFICE AND CANTEEN FOR A PERIOD OF 3 YEARS AND ASSOCIATED FILLING OF LAND

SITE LOCATION
VARIOUS LOTS IN D.D. 99, CHAU TAU, NEW TERRITORIES

| | |
|---|---|
| SCALE - | |
| DRAWN BY OL | DATE 14.2.2023 |
| CHECKED BY OL | DATE 11.4.2023 |
| APPROVED BY | DATE |

DWG. TITLE
FSIs PROPOSAL (1/4)

| | |
|---|---|
| DWG NO. APPENDIX III | VER. 001 |

**DEVELOPMENT PARAMETERS**

| | | |
|---|---|---|
| APPLICATION SITE AREA | : 4,242 $m^2$ | (ABOUT) |
| COVERED AREA | : 1,781 $m^2$ | (ABOUT) |
| UNCOVERED AREA | : 2,461 $m^2$ | (ABOUT) |
| PLOT RATIO | : 0.84 | (ABOUT) |
| SITE COVERAGE | : 42 % | (ABOUT) |
| NO. OF STRUCTURE | : 2 | |
| DOMESTIC GFA | : NOT APPLICABLE | |
| NON-DOMESTIC GFA | : 3,562 $m^2$ | (ABOUT) |
| TOTAL GFA | : 3,562 $m^2$ | (ABOUT) |
| BUILDING HEIGHT | : 8 m - 11 m | (ABOUT) |
| NO. OF STOREY | : 2 | |

**PARKING AND LOADING/UNLOADING PROVISIONS**

| | |
|---|---|
| NO. OF PRIVATE CAR PARKING SPACE | : 4 |
| DIMENSIONS OF PARKING SPACE | : 5 m (L) X 2.5 m (W) |
| NO. OF LIGHT GOODS VEHICLE PARKING SPACE | : 3 |
| DIMENSION OF PARKING SPACE | : 7 m (L) X 3.5 m (W) |
| NO. OF L/UL SPACE FOR LIGHT GOODS VEHICLE | : 2 |
| DIMENSION OF L/UL SPACE | : 7 m (L) X 3.5 m (W) |
| NO. OF L/UL SPACE FOR CONTAINER VEHICLE | : 1 |
| DIMENSION OF L/UL SPACE | : 16 m (L) X 3.5 m (W) |

| STRUCTURE | | USE | COVERED AREA | BUILDING HEIGHT | FIRE COMPARTMENT |
|---|---|---|---|---|---|
| B1 | (G/F) | WAREHOUSE (EXCL. DANGEROUS GOODS GODOWN) | 1,673 $m^2$ (ABOUT) | 5.5 m (ABOUT) | 9201.5 $m^3$ (ABOUT) |
| | (1/F) | WAREHOUSE (EXCL. DANGEROUS GOODS GODOWN) | 1,673 $m^2$ (ABOUT) | 5.5 m (ABOUT) | 9201.5 $m^3$ (ABOUT) |
| B2 | (G/F) | ANCILLARY CANTEEN | 108 $m^2$ (ABOUT) | 4 m (ABOUT) | 432 $m^3$ (ABOUT) |
| | | ANCILLARY OFFICE | 108 $m^2$ (ABOUT) | 4 m (ABOUT) | 432 $m^3$ (ABOUT) |
| | | TOTAL | 1,781 $m^2$ (ABOUT) | 3,562 $m^2$ (ABOUT) | |

** PROPOSED STAIRCASE OF B1 ARE OPENED STAIR

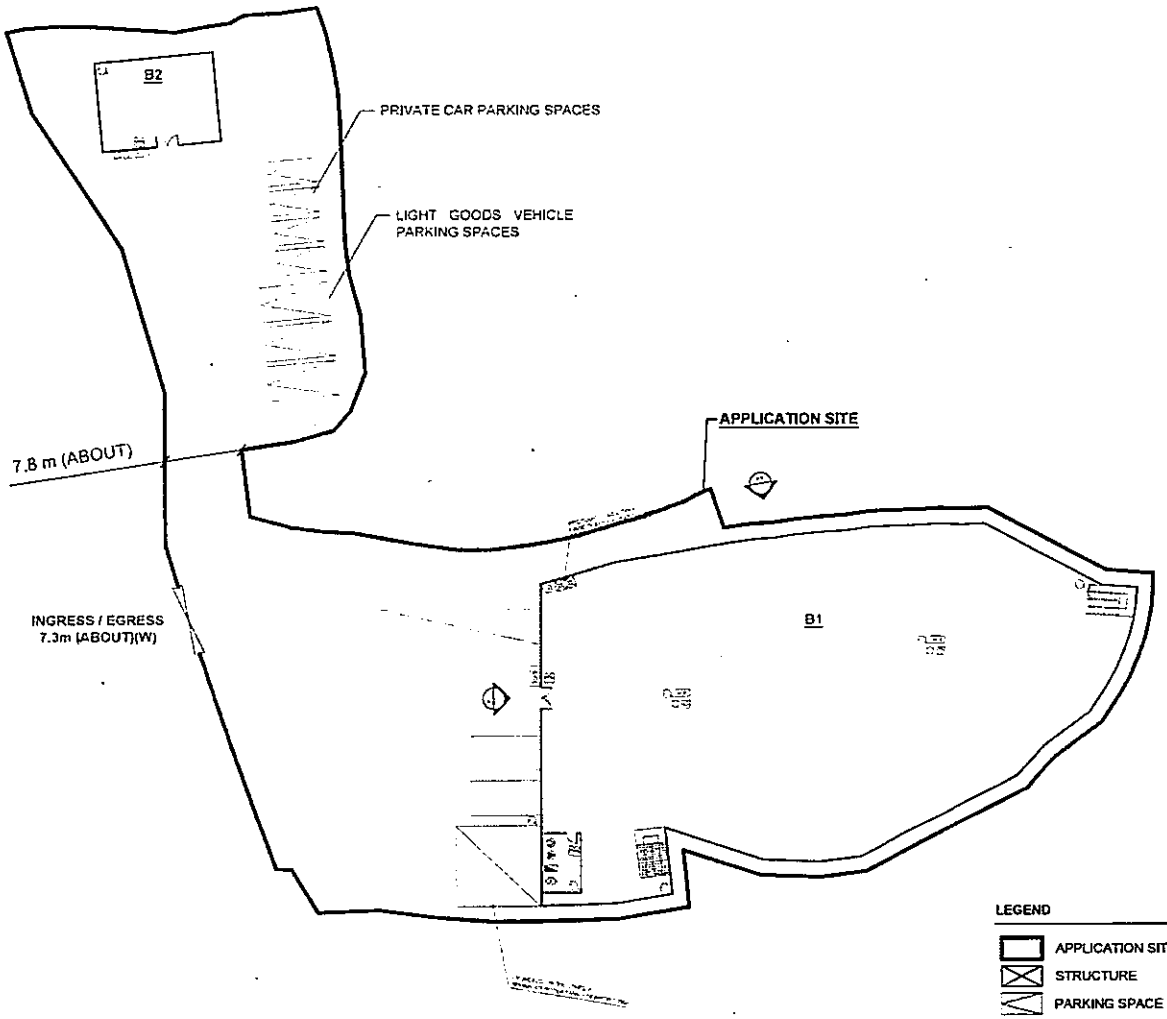


**FIRE SERVICE INSTALLATIONS**

- EXIT — EXIT SIGN AND EMERGENCY LIGHTING
- 4 KG DRY POWER TYPE FIRE EXTINGUISHER
- HOSE REEL PUMP
- SPRINKLER PUMP
- PUMP CONTROL PANEL
- BREAK GLASS UNIT
- VISUAL ALARM DEVICE
- 2,000 LITRES FIBRE GLASS F.S. WATER TANK
- 135,000 LITRES R.C. SPRINKLER WATER TANK
- H.R. — HOSE REEL SET
- SPRINKLER CONTROL VALVE
- SPRINKLER INLET

**LEGEND**

- APPLICATION SITE
- STRUCTURE
- PARKING SPACE
- L/UL SPACE
- INGRESS / EGRESS

NORTH
W E
S

PLANNING CONSULTANT
R-Riches Property Consultants Ltd.

PROJECT
PROPOSED TEMPORARY WAREHOUSE WITH ANCILLARY OFFICE AND CANTEEN FOR A PERIOD OF 3 YEARS AND ASSOCIATED FILLING OF LAND

SITE LOCATION
VARIOUS LOTS IN D.D. 99, CHAU TAU, NEW TERRITORIES

SCALE
1 : 700 @ A4

| DRAWN BY | DATE |
|---|---|
| OL | 14.2.2023 |
| CHECKED BY | DATE |
| OL | 11.4.2023 |
| APPROVED BY | DATE |

DWG TITLE
FSIs PROPOSAL (2/4)

| DWG NO. | VER. |
|---|---|
| APPENDIX III | 001 |

**DEVELOPMENT PARAMETERS**

| | | |
|---|---|---|
| APPLICATION SITE AREA | : 4,242 $m^2$ | (ABOUT) |
| COVERED AREA | : 1,781 $m^2$ | (ABOUT) |
| UNCOVERED AREA | : 2,461 $m^2$ | (ABOUT) |
| PLOT RATIO | : 0.84 | (ABOUT) |
| SITE COVERAGE | : 42 % | (ABOUT) |
| NO. OF STRUCTURE | : 2 | |
| DOMESTIC GFA | : NOT APPLICABLE | |
| NON-DOMESTIC GFA | : 3,562 $m^2$ | (ABOUT) |
| TOTAL GFA | : 3,562 $m^2$ | (ABOUT) |
| BUILDING HEIGHT | : 8 m - 11 m | (ABOUT) |
| NO. OF STOREY | : 2 | |

**PARKING AND LOADING/UNLOADING PROVISIONS**

| | |
|---|---|
| NO. OF PRIVATE CAR PARKING SPACE | : 4 |
| DIMENSIONS OF PARKING SPACE | : 5 m (L) X 2.5 m (W) |
| NO. OF LIGHT GOODS VEHICLE PARKING SPACE | : 3 |
| DIMENSION OF PARKING SPACE | : 7 m (L) X 3.5 m (W) |
| NO. OF L/UL SPACE FOR LIGHT GOODS VEHICLE | : 2 |
| DIMENSION OF L/UL SPACE | : 7 m (L) X 3.5 m (W) |
| NO. OF L/UL SPACE FOR CONTAINER VEHICLE | : 1 |
| DIMENSION OF L/UL SPACE | : 16 m (L) X 3.5 m (W) |

| STRUCTURE | | USE | COVERED AREA | BUILDING HEIGHT | FIRE COMPARTMENT |
|---|---|---|---|---|---|
| B1 | (G/F) | WAREHOUSE (EXCL. DANGEROUS GOODS GODOWN) | 1,673 $m^2$ (ABOUT) | 5.5 m (ABOUT) | 9201.5 $m^2$ (ABOUT) |
| | (1/F) | WAREHOUSE (EXCL. DANGEROUS GOODS GODOWN) | 1,673 $m^2$ (ABOUT) | 5.5 m (ABOUT) | 9201.5 $m^2$ (ABOUT) |
| B2 | (G/F) | ANCILLARY CANTEEN | 108 $m^2$ (ABOUT) | 4 m (ABOUT) | 432 $m^2$ (ABOUT) |
| | | ANCILLARY OFFICE | 108 $m^2$ (ABOUT) | 4 m (ABOUT) | 432 $m^2$ (ABOUT) |
| | | TOTAL | 1,781 $m^2$ (ABOUT) | 3,562 $m^2$ (ABOUT) | |

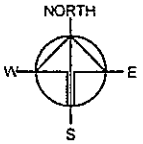


## 1/F INTERNAL LAYOUT OF STRUCTURE B1

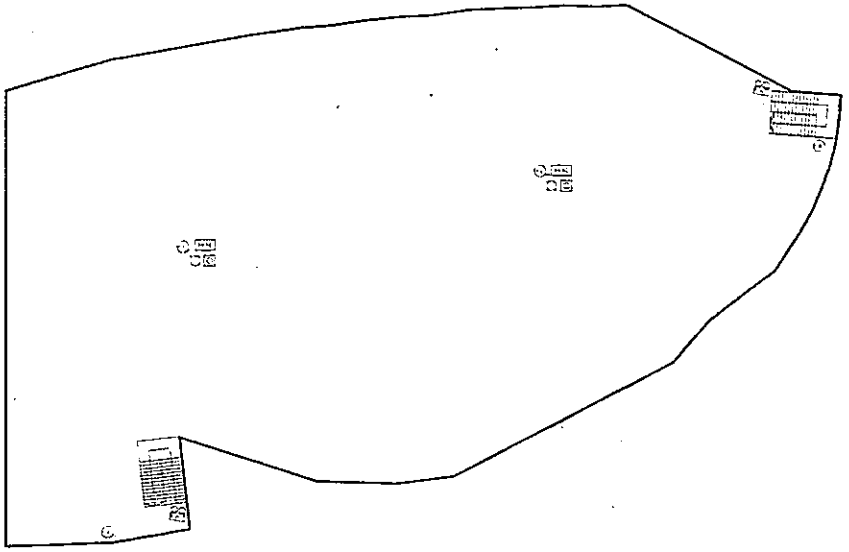

**FIRE SERVICE INSTALLATIONS**

- EXIT SIGN AND EMERGENCY LIGHTING
- 4 KG DRY POWER TYPE FIRE EXTINGUISHER
- HOSE REEL PUMP
- SPRINKLER PUMP
- PUMP CONTROL PANEL
- BREAK GLASS UNIT
- VISUAL ALARM DEVICE
- 2,000 LITRES FIBRE GLASS F.S. WATER TANK
- 135,000 LITRES R.C. SPRINKLER WATER TANK
- H.R. HOSE REEL SET
- SPRINKLER CONTROL VALVE
- SPRINKLER INLET

**LEGEND**

- APPLICATION SITE
- STRUCTURE
- PARKING SPACE
- L/UL SPACE
- INGRESS / EGRESS

PLANNING CONSULTANT

R-Riches Property Consultants Ltd.

PROJECT

PROPOSED TEMPORARY WAREHOUSE WITH ANCILLARY OFFICE AND CANTEEN FOR A PERIOD OF 3 YEARS AND ASSOCIATED FILLING OF LAND

SITE LOCATION

VARIOUS LOTS IN D.D. 99, CHAU TAU, NEW TERRITORIES

| | |
|---|---|
| SCALE | 1 : 500 @ A4 |
| DRAWN BY: OL | DATE: 14.2.2023 |
| CHECKED BY: OL | DATE: 11.4.2023 |
| APPROVED BY: | DATE: |
| DWG. TITLE | FSIs PROPOSAL (3/4) |
| DWG NO. APPENDIX III | VER. 001 |

**DEVELOPMENT PARAMETERS**

| | | |
|---|---|---|
| APPLICATION SITE AREA | : 4,242 $m^2$ | (ABOUT) |
| COVERED AREA | : 1,781 $m^2$ | (ABOUT) |
| UNCOVERED AREA | : 2,461 $m^2$ | (ABOUT) |
| PLOT RATIO | : 0.84 | (ABOUT) |
| SITE COVERAGE | : 42 % | (ABOUT) |
| NO. OF STRUCTURE | : 2 | |
| DOMESTIC GFA | . NOT APPLICABLE | |
| NON-DOMESTIC GFA | : 3,562 $m^2$ | (ABOUT) |
| TOTAL GFA | : 3,562 $m^2$ | (ABOUT) |
| BUILDING HEIGHT | : 8 m - 11 m | (ABOUT) |
| NO. OF STOREY | : 2 | |

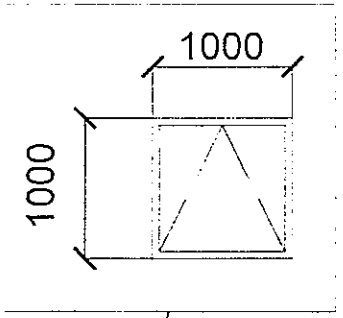


1:50 DETAIL OF A

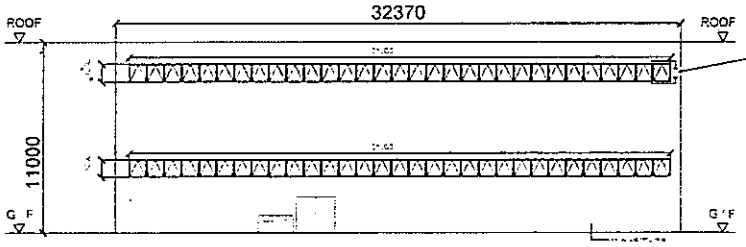


ELEVATION PLAN ( ELV A-A )

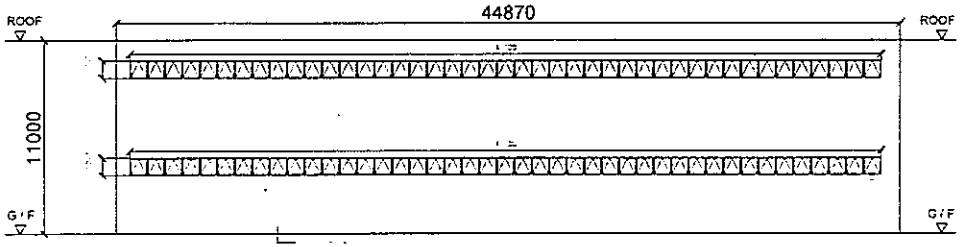


ELEVATION PLAN ( ELV B-B )

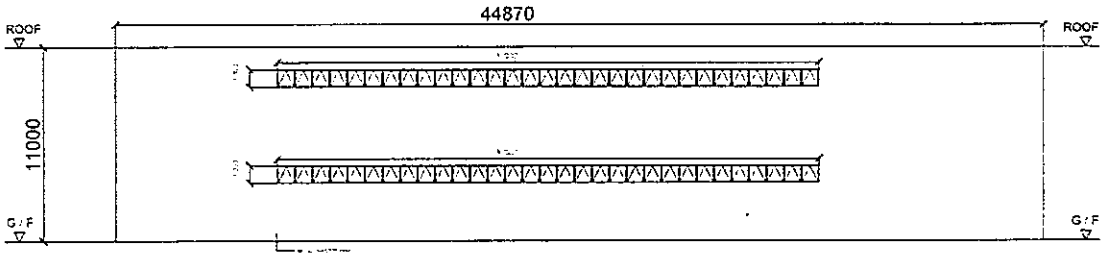


ELEVATION PLAN ( ELV C-C )

| OPENABLE WINDOW AREA CALCULAION UNDER F.S.D. REQUIREMENT FOR COMPARTMENT EXCEEDING 7000$m^3$ | |
|---|---|
| LOCATION | B1 |
| GFA | G/F : 1673$m^2$<br>1/F : 1673$m^2$ |
| OPENABLE WINDOW AREA REQUIRED | G/F : 1673$m^2$ X 6.25% = 104.6$m^2$<br>1/F : 1673$m^2$ X 6.25% = 104.6$m^2$ |
| OPENABLE WINDOW AREA PROVIDED | REFER TO ELEVATION - (A-A) = 31$m^2$ + 31$m^2$<br>REFER TO ELEVATION - (B-B) = 43$m^2$ + 43$m^2$<br>REFER TO ELEVATION - (C-C) = 31$m^2$ + 31$m^2$ |
| | TOTAL = 210$m^2$ > 209.2$m^2$ |

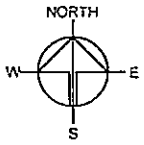


PLANNING CONSULTANT

R-Riches Property Consultants Ltd.

PROJECT

PROPOSED TEMPORARY WAREHOUSE WITH ANCILLARY OFFICE AND CANTEEN FOR A PERIOD OF 3 YEARS AND ASSOCIATED FILLING OF LAND

SITE LOCATION

VARIOUS LOTS IN D.D. 99, CHAU TAU, NEW TERRITORIES

| | |
|---|---|
| SCALE | 1 : 400 @ A4 |
| DRAWN BY | OL |
| DATE | 14.2.2023 |
| CHECKED BY | OL |
| DATE | 11.4.2023 |
| APPROVED BY | |
| DATE | |
| DWG. TITLE | FSIs PROPOSAL (4/4) |
| DWG NO. | APPENDIX III |
| VER. | 001 |

R-Riches
Property Consultants Ltd.

**Appendix Ia of RNTPC Paper No. A/YL-ST/646**

盈卓物業
顧問有限公司

Our Ref. : DD99 Lot 247 & VL
Your Ref. : TPB/A/YL-ST/646

The Secretary
Town Planning Board
15/F, North Point Government office
333 Java Road
North Point, Hong Kong

**By Email**

7 June 2023

Dear Sir,

**1st Further Information**

**Proposed Temporary Warehouse (Excluding Dangerous Goods Godown) with Ancillary Office and Canteen for a Period of 3 Years and Associated Filling of Land in "Green Belt" Zone, Various Lots in D.D. 99, Chau Tau, Yuen Long**

**(S.16 Planning Application No. A/YL-ST/646)**

We are writing to submit Further Information to address departmental comments of the subject application (**Appendix I**).

Should you require more information regarding the application, please contact our Mr. Orpheus LEE at / or the undersigned at your convenience. Thank you for your kind attention.

Yours faithfully,

For and on behalf of
**R-riches Property Consultants Limited**

**Louis TSE**
Town Planner

cc DPO/FSYLE, PlanD (Attn.: Ms. Alice CHEUNG email: ayycheung@pland.gov.hk )
(Attn.: Mr. Davy LAM email: dlylam@pland.gov.hk )

**Responses-to-Comments**

**Proposed Temporary Warehouse (Excluding Dangerous Goods Godown) with Ancillary Office and Canteen for a Period of 3 Years and Associated Filling of Land in "Green Belt" Zone, Various Lots in D.D. 99, Chau Tau, Yuen Long**

**(S.16 Planning Application No. A/YL-ST/646)**

(i) A RtoC Table:

| Departmental Comments | | Applicant's Responses |
|---|---|---|
| **1. Comments of District Lands Officer/Yuen Long, LandsD (Contact Person: Mr. YIP Wai Ki; Tel: 2443 3474)** | | |
| (a) | LandsD has grave concerns given that there are unauthorized building works and/or uses on Lot No. 276 S.B RP in D.D. 99 which are already subject to lease enforcement actions according to case priority. The lot owner(s) should remedy the lease breaches as demanded by LandsD. | Noted. The applicant will submit Short Term Waiver (STW) applications to Lands Department to make way for erection of the proposed structures at the Site. No structure is proposed for domestic use. |
| **2. Comments of Chief Town Planner, Urban Design & Landscape, Planning Department (Contact Person: Mr. NG Tat Yuen, Henry; Tel: 3565 3950)** | | |
| (a) | The applicant should provide information on existing trees within the site (e.g. species, size, condition, location and proposed tree treatment) and mitigation measures for consideration. | According to the tree survey report conducted on 21/4/2023, a total of 2 nos. of trees were recorded within the site boundary (**Annex I**). No OVT or protected species has been identified in accordance with the DEVB TC(W) No. 5/2020 – Registration and Preservation of Old and Valuable Trees and the Forests and Countryside Ordinance (Cap.96) respectively. All identified trees are proposed to be felled (**Plan 1**).<br><br>Due to the felling of existing trees within the Site, 2 new trees are proposed to be planted to compensate for the loss of the 2 existing trees (**Plan 1**). They will be planted at the Northern portion of the application site. All these new trees within the Site will be maintained by the applicant. |

| 3. Comments of Chief Engineer/Mainland North, Drainage Services Department (Contact Person: Mr. LEONG Cheung Ching; Tel: 2300 1432) | | |
|---|---|---|
| (a) | The site is situated in a relatively low-lying area. The catchment zone in the submission shall consider the flow path with reference to the site topography. | It has been considered accordingly. Please see the revised drainage proposal at **Annex II**. |
| (b) | Since the applicant proposes land filling works on the site, the applicant is required to demonstrate that there will be no adverse impact to the nearby site in the drainage proposal. | Cross-section is provided |
| (c) | There is no cover to the underground pipe according to the information shown in the sectional view. Please view. | Inverted level of underground pipe is revised. |
| (d) | From our record, the existing channel to be discharged to is 1000mm wide. Please clarify. | It is revised accordingly. |
| (e) | Please provide the drainage details of the U channel with cast iron grating. | It is provided accordingly in accordance with CEDD's standard drawing C2412E. |

**LANDSCAPE PROPOSAL**

| | |
|---|---|
| APPLICATION SITE AREA | : 4,242 $m^2$ (ABOUT) |
| NO. OF PROPOSED TREES | : 2 |
| SPECIES OF TREES | : *BAUHINIA BLAKEANA* |
| SPACING OF TREES | : NOT MORE THAN 4m |
| HEIGHT OF TREES | : NOT LESS THAN 2.75m |
| DIMENSION OF TREE PITS | : 1m (W) X 1m (L) X 1.2m (D) |

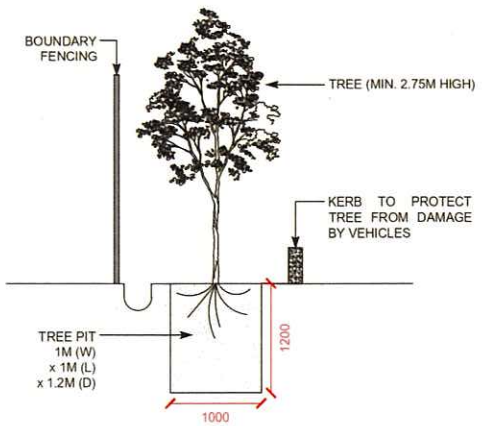


**TYPICAL DIMENSIONS**
**SCALE 1:100**

(INDICATIVE ONLY)

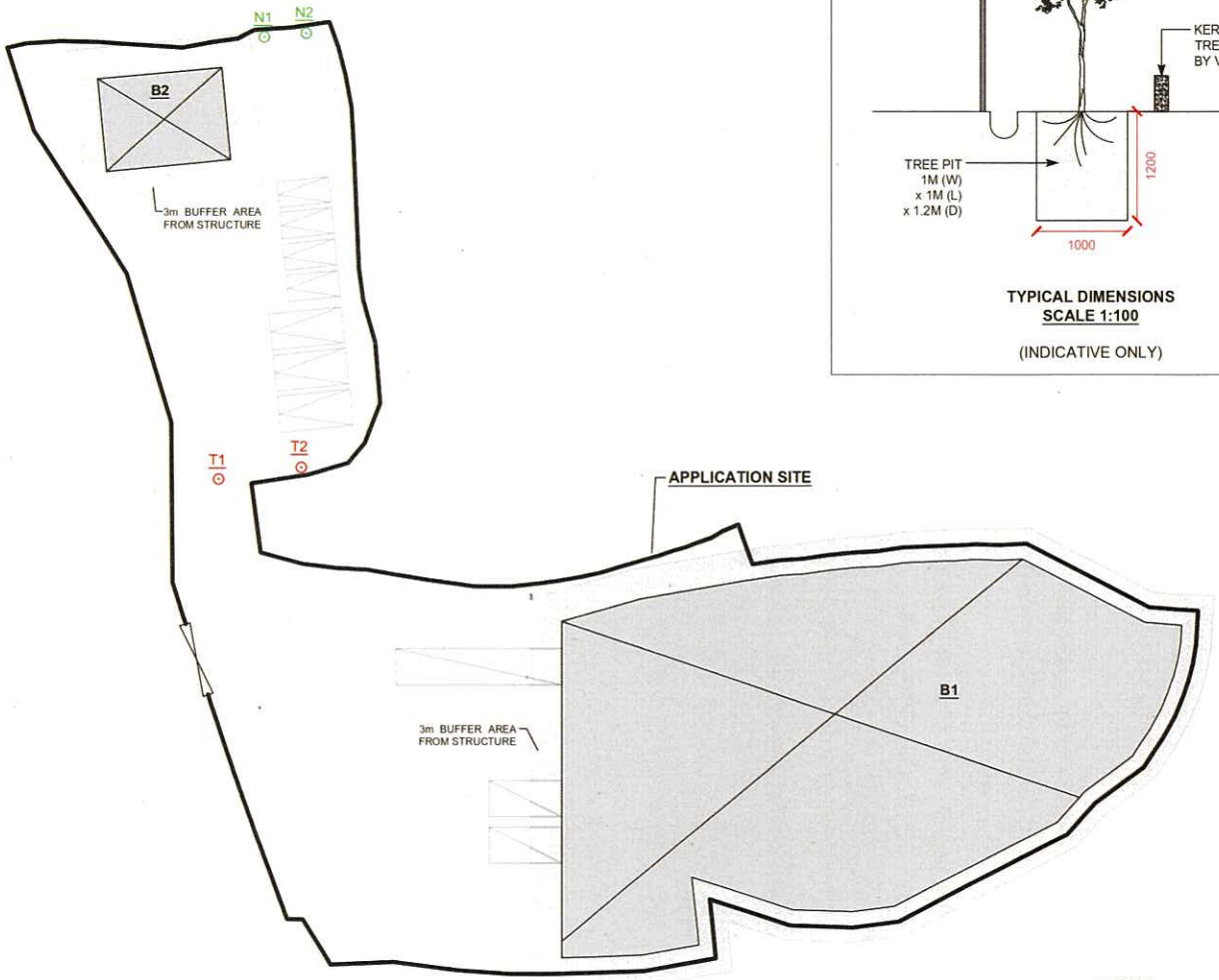


**LEGEND**

- APPLICATION SITE
- STRUCTURE
- PARKING SPACE
- L/UL SPACE
- INGRESS / EGRESS
- EXISTING TREES (WILL BE FELLED)
- PROPOSED NEW TREES

**NOTES:**

1) THE APPLICANT WILL MAINTAIN TREES IN GOOD CONDITION DURING THE PLANNING APPROVAL PERIOD.
2) THE APPLICANT WOULD REPLACE TREES WHICH ARE DYING OR DEAD DURING THE PLANNING APPROVAL PERIOD.
3) THE APPLICANT WOULD PROVIDE ADEQUATE IRRIGATION FOR TREES.

PLANNING CONSULTANT

R-Riches Property Consultants Ltd.

PROJECT

PROPOSED TEMPORARY WAREHOUSE WITH ANCILLARY OFFICE AND CANTEEN FOR A PERIOD OF 3 YEARS AND ASSOCIATED FILLING OF LAND

SITE LOCATION

VARIOUS LOTS IN D.D. 99, CHAU TAU, NEW TERRITORIES

| | |
|---|---|
| SCALE | 1 : 700 @ A4 |
| DRAWN BY: MN | DATE: 15.2.2023 |
| CHECKED BY: OL | DATE: 12.5.2023 |
| APPROVED BY: | DATE: |

DWG. TITLE: LANDSCAPE PROPOSAL

| | |
|---|---|
| DWG NO: Plan 1 | VER: 001 |

永豪園綠化工程有限公司
WING HO YUEN LANDSCAPING CO., LTD.

# Tree Survey Report

**Date of Survey: 21st April 2023**

**Location:**
**Private Area, Chau Tau West Road, Lok Ma Chau**

Prepared by:

Mak Ka Hei

Date: 21st April 2023

# Table of contents

1. Introduction 3

2. Summary of Existing Trees 4

Appendix:

I. Tree Survey Plan

II. Tree Survey Schedule

III. Photo Records

Disclaimer:

The tree survey conducted indicates the condition of the surveyed trees at the time of inspection only. The assessments of amenity value, form, health and structural condition of the trees surveyed are based on visual inspection from the ground only. No aerial inspection, root digging or mapping, or diagnostic testing has been conducted as part of this survey. Wing Ho Yuen Landscaping Company Limited cannot accept responsibility for future failure or defects detected after the time of inspection of the trees surveyed in this report.

## 1. Introduction

The survey conducted is to record all the existing trees in the tree survey boundary. The survey include tree species identification, tree tagging with durable labels, the measurements of overall tree height, Diameter at Breast Height (DBH), average crown spread, the evaluation on amenity value, form, health and structural conditions.

The tree survey was conducted on 21st April 2023. Plants with DBH less than 95mm were not recorded in the survey.

## 2. Summary of Existing Trees

The surveyed site is located at Private Area, Chau Tau West Road, Lok Ma Chau.

At the time of inspection on 21st April 2023, **2 nos.** tree were found within the Site. **No** dead tree was recorded in the surveyed area. Location of individual tree refers to Appendix I.

Details of tree conditions and photo records for individual tree are recorded in the Appendix II and Appendix III respectively.

# Appendix I – Tree Survey Plan

# Tree Survey Plan

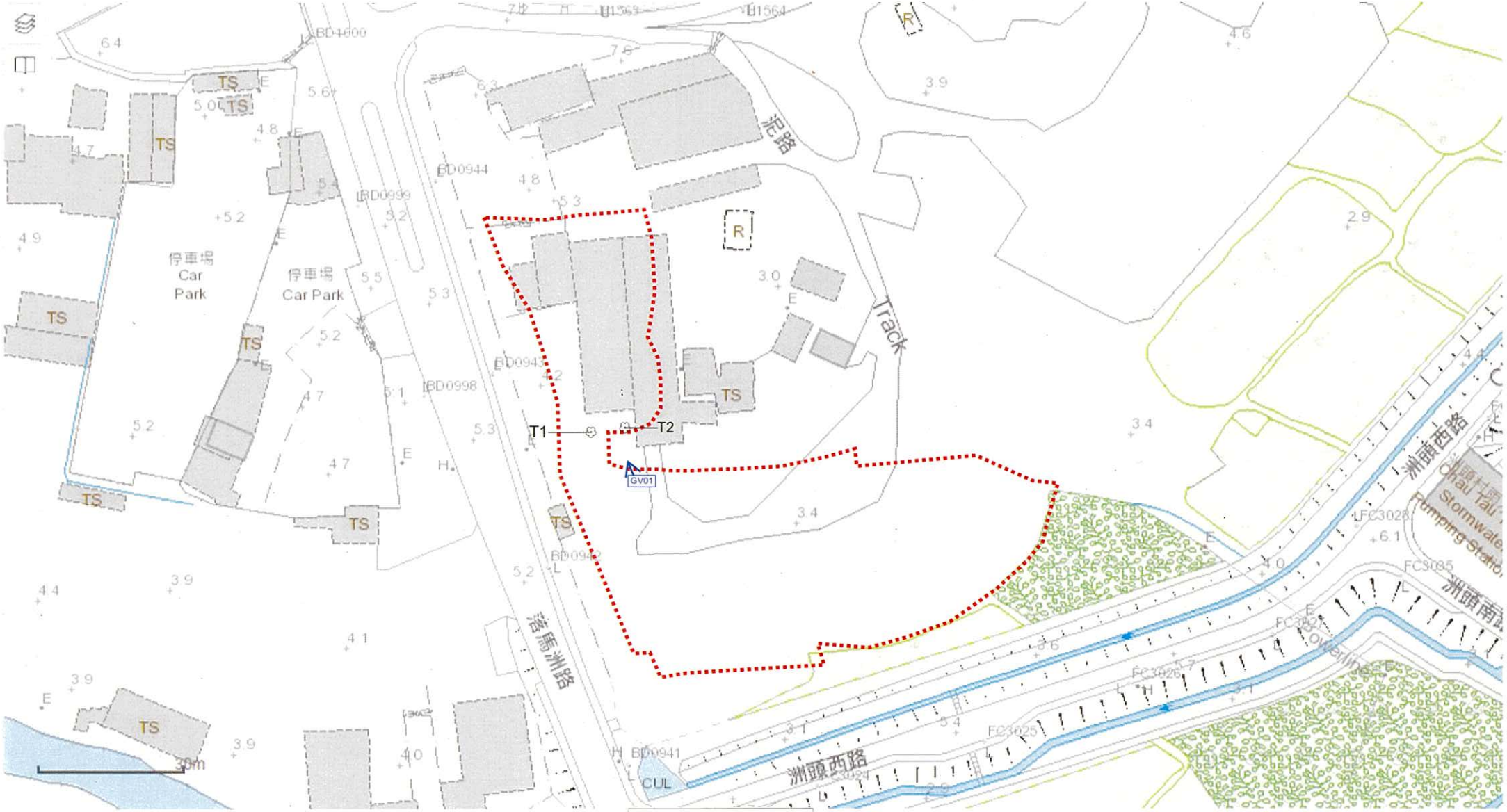


**LEGEND**

: Surveyed Tree

GVXX : General view

-------- : Site Boundary

# Appendix II –Tree Survey Schedule

**Tree Survey Schedule**

Location: Private Area, Chau Tau West Road, Lok Ma Chau
Tree surveyor(s): Mak Ka Hei
Field Survey was conducted on: 21 April 2023

永豪園綠化工程有限公司
WING HO YUEN LANDSCAPING CO., LTD.

| Tree No. | Tree Species | | Tree Size Measurements | | | Amenity Value | Form | Health Condition | Structural Condition | Suitability for Transplanting | Remarks |
|---|---|---|---|---|---|---|---|---|---|---|---|
| | Botanical Name | Chinese Name | Overall Height (m) | DBH (mm) | Average Crown Spread (m) | High /Med /Low | Good /Fair /Poor | Good /Fair /Poor /Dead | Good /Fair /Poor | High /Med /Low | |
| T01 | *Macaranga tanarius* | 血桐 | 7.5 | 360 | 9.0 | Low | Poor | Poor | Poor | Low | broken branch, broken trunk, climbers, abnormal bark cracks, dead branch with fungal fruiting bodies, decay at trunk base, heavy lateral limb, sparse foliage, abnormal leaf size |
| T02 | *Litsea monopetala* | 假柿木薑子 (假柿樹) | 9.0 | 340 | 5.5 | Low | Poor | Poor | Poor | Low | topped with epicormics |

**Notes: Amenity Value, Form, Health Condition and Structural Condition of trees were obtained by Visual Assessment Only.**

# Appendix III – Photo Records

# General View

General view 01

General view 02

# Photo Records

T1 (Overview)

T1 Broken branch_1

T1 Broken branch_2

T1 Broken brranch_3

# Photo Records

T1 Broken trunk

T1 Climbers (Abnormal bark cracks)

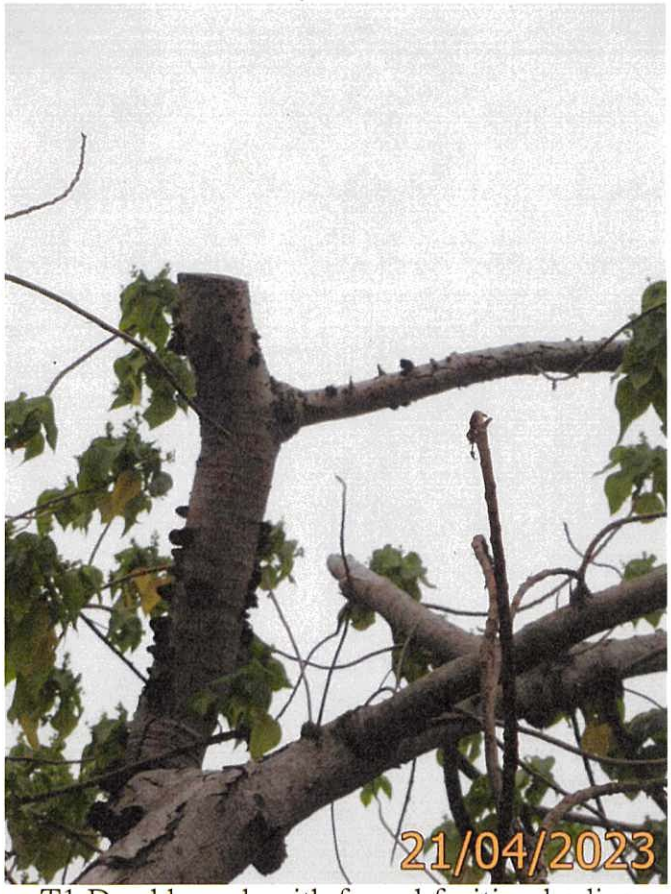


T1 Dead branch with fungal fruiting bodies

T1 Decay at trunk base

# Photo Records

T1 Heavy lateral limb

T1 Sparse foliage (Abnormal leaf size)

T2 (Overview)

T2 Topped with epicormics

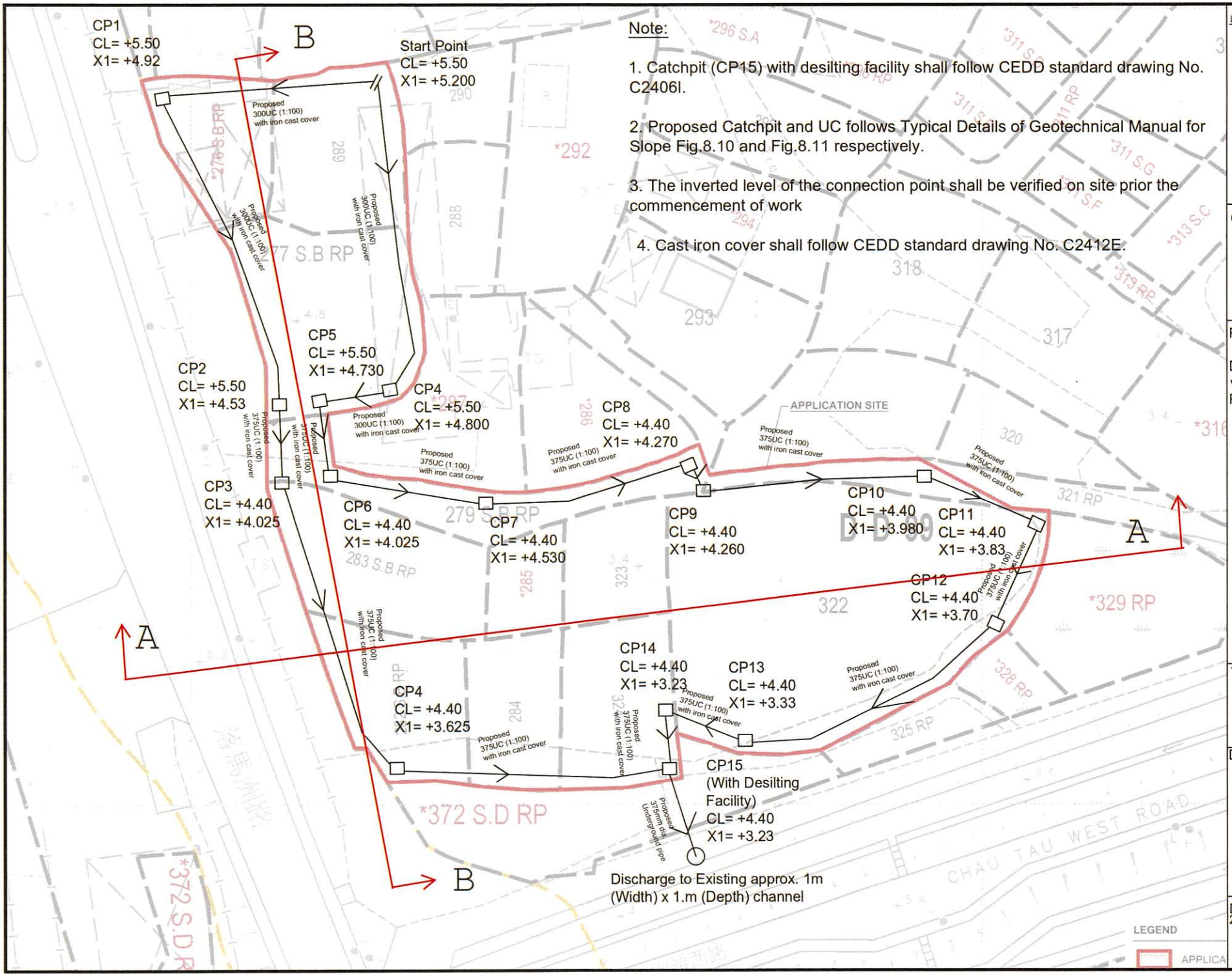


Note:

1. Catchpit (CP15) with desilting facility shall follow CEDD standard drawing No. C2406I.

2. Proposed Catchpit and UC follows Typical Details of Geotechnical Manual for Slope Fig.8.10 and Fig.8.11 respectively.

3. The inverted level of the connection point shall be verified on site prior the commencement of work

4. Cast iron cover shall follow CEDD standard drawing No. C2412E.

Legend:

- Proposed UC (1:100) with cast iron cover
- Existing Drain
- Proposed Catchpit

Company:

Project:

DD99 Lot 247 with various lots (Drainage Proposal)

**Annex II**

Title:

Drainage layout

Dwg No: Fig.1

File: Lot 247 in D.D. 99

Date: 20 Jan 2023

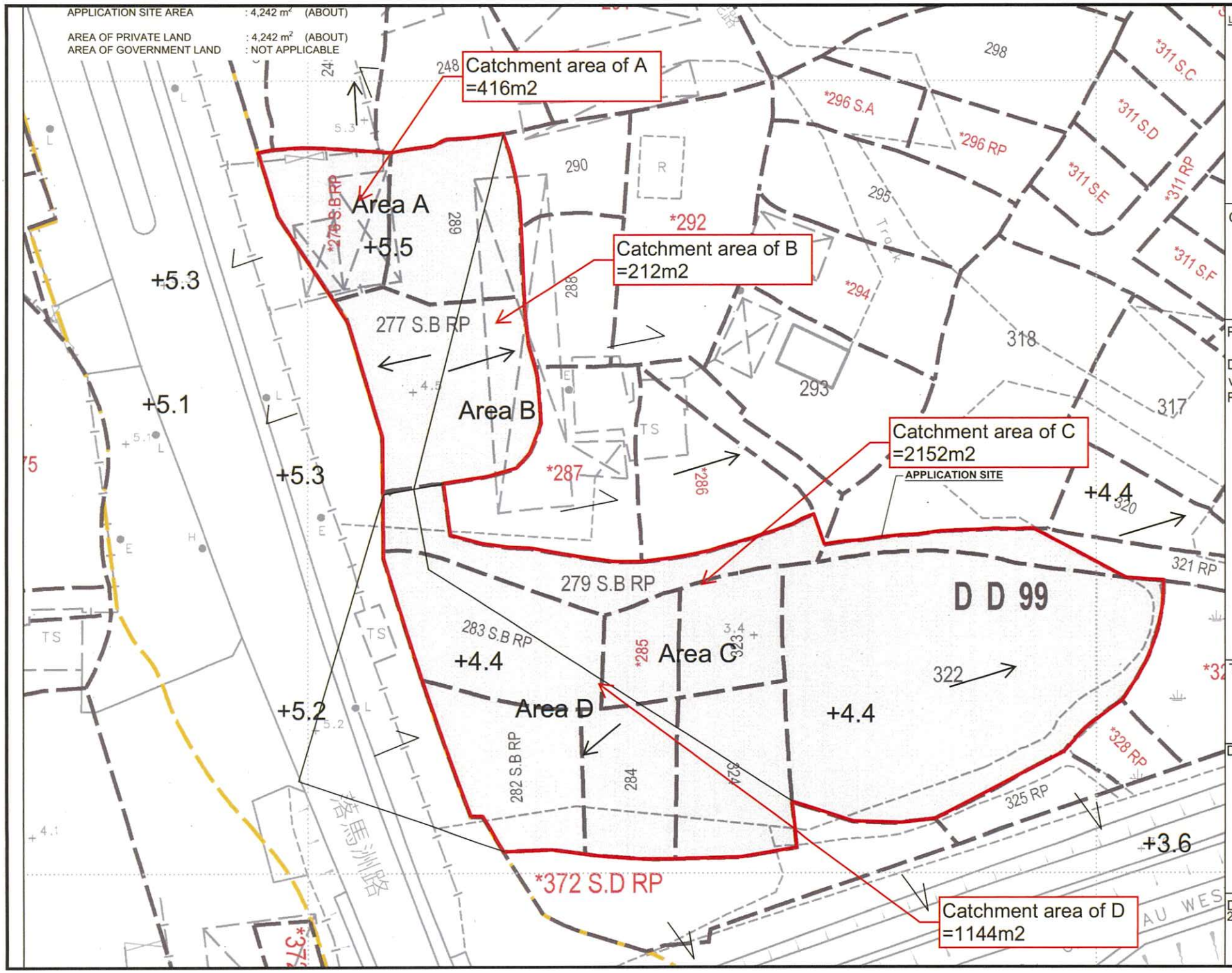


Company:

Project:

DD99 Lot 247 with various lots (Drainage Proposal)

Title:

Catchment Zone

Dwg No: Fig.2

File: Lot 247 in D.D. 99

Date: 20 Jan 2023

Company:
Project :

Date: 23/8/2018

Calculation for channels:

Catchment Area of site

| | | | | | | | | | | |
|---|---|---|---|---|---|---|---|---|---|---|
| Area A | = | 792 | m^2 | | | | | | | |
| | = | 0.000792 | km^2 | | | | | | | |
| Peak runoff in m^3/s | = | 0.278 | x | 0.95 | x | 250 | mm/hr | x | 0.000792 | km^2 |
| | = | 0.052292 | m^3/s | | | | | | | |
| | = | 3138 | liter/min | | | | | | | |
| Area B | = | 405 | m^2 | | | | | | | |
| | = | 0.000405 | km^2 | | | | | | | |
| Peak runoff in m^3/s | = | 0.278 | x | 0.95 | x | 250 | mm/hr | x | 0.000405 | km^2 |
| | = | 0.02674 | m^3/s | | | | | | | |
| | = | 1604 | liter/min | | | | | | | |
| Area C | = | 2567 | m^2 | | | | | | | |
| | = | 0.002567 | km^2 | | | | | | | |
| Peak runoff in m^3/s | = | 0.278 | x | 0.95 | x | 250 | mm/hr | x | 0.002567 | km^2 |
| | = | 0.169486 | m^3/s | | | | | | | |
| | = | 10169 | liter/min | | | | | | | |
| Area D | = | 1645 | m^2 | | | | | | | |
| | = | 0.001645 | km^2 | | | | | | | |
| Peak runoff in m^3/s | = | 0.278 | x | 0.95 | x | 250 | mm/hr | x | 0.001645 | km^2 |
| | = | 0.108611 | m^3/s | | | | | | | |
| | = | 6517 | liter/min | | | | | | | |

| | | | | | | |
|---|---|---|---|---|---|---|
| Total Peak Runoff for A | = | 0.052292 | m^3/s | = | 3137.508 | liter/min |
| Total Peak Runoff for A and D | = | 0.160903 | m^3/s | = | 9654.1755 | liter/min |
| Total Peak Runoff for B | = | 0.02674 | m^3/s | = | 1604.4075 | liter/min |
| Total Peak Runoff for B and C | = | 0.278097 | m^3/s | = | 16685.838 | liter/min |

According to (Figure 8.7 - Chart for the Rapid Design of Channels),
For gradient 1:100, 300UC will be suitable for area A and B
For gradient 1:100, 375UC will be suitable for area D
For gradient 1:100, 375UC will be suitable for area C

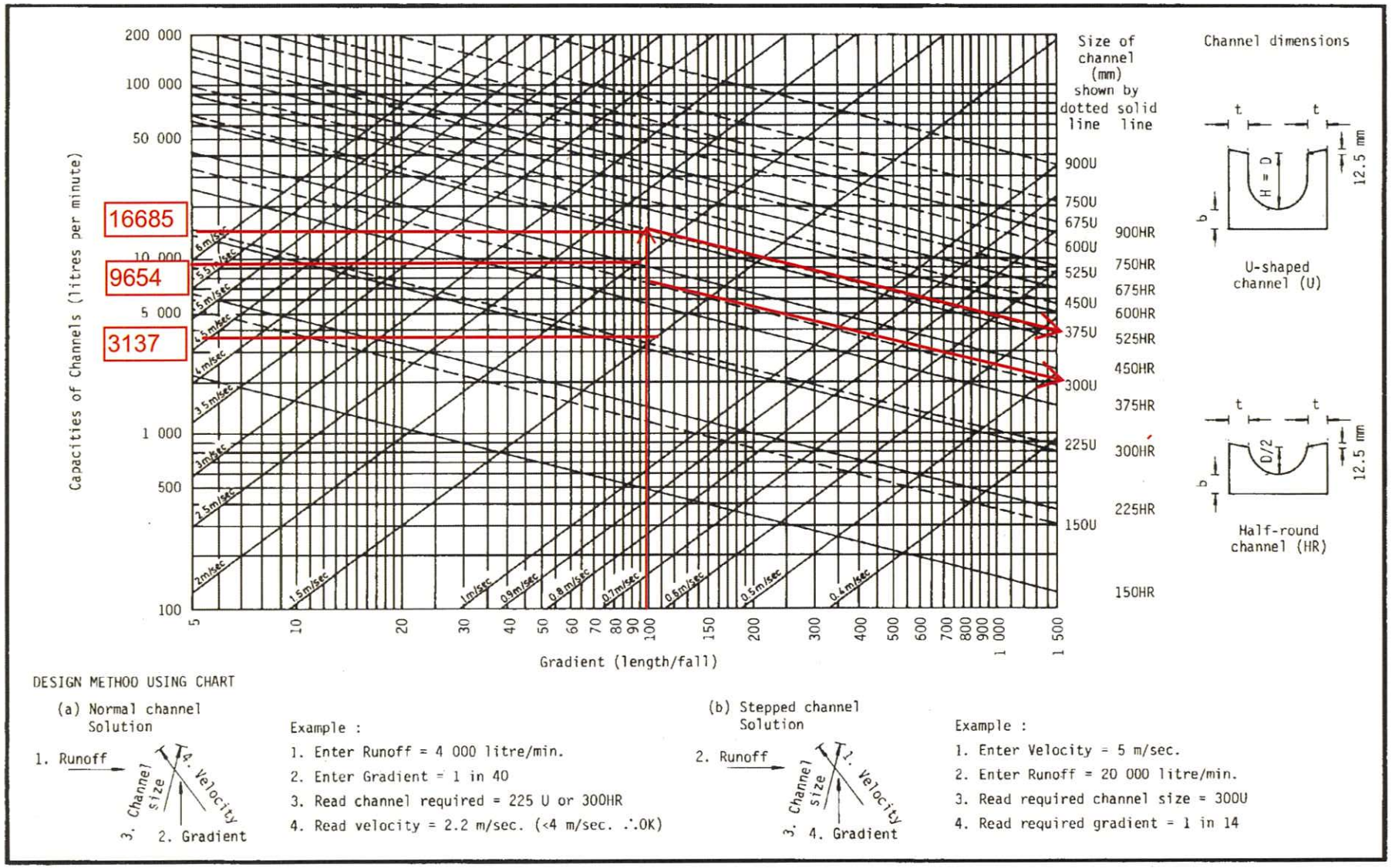


Figure 8.7 - Chart for the Rapid Design of Channels

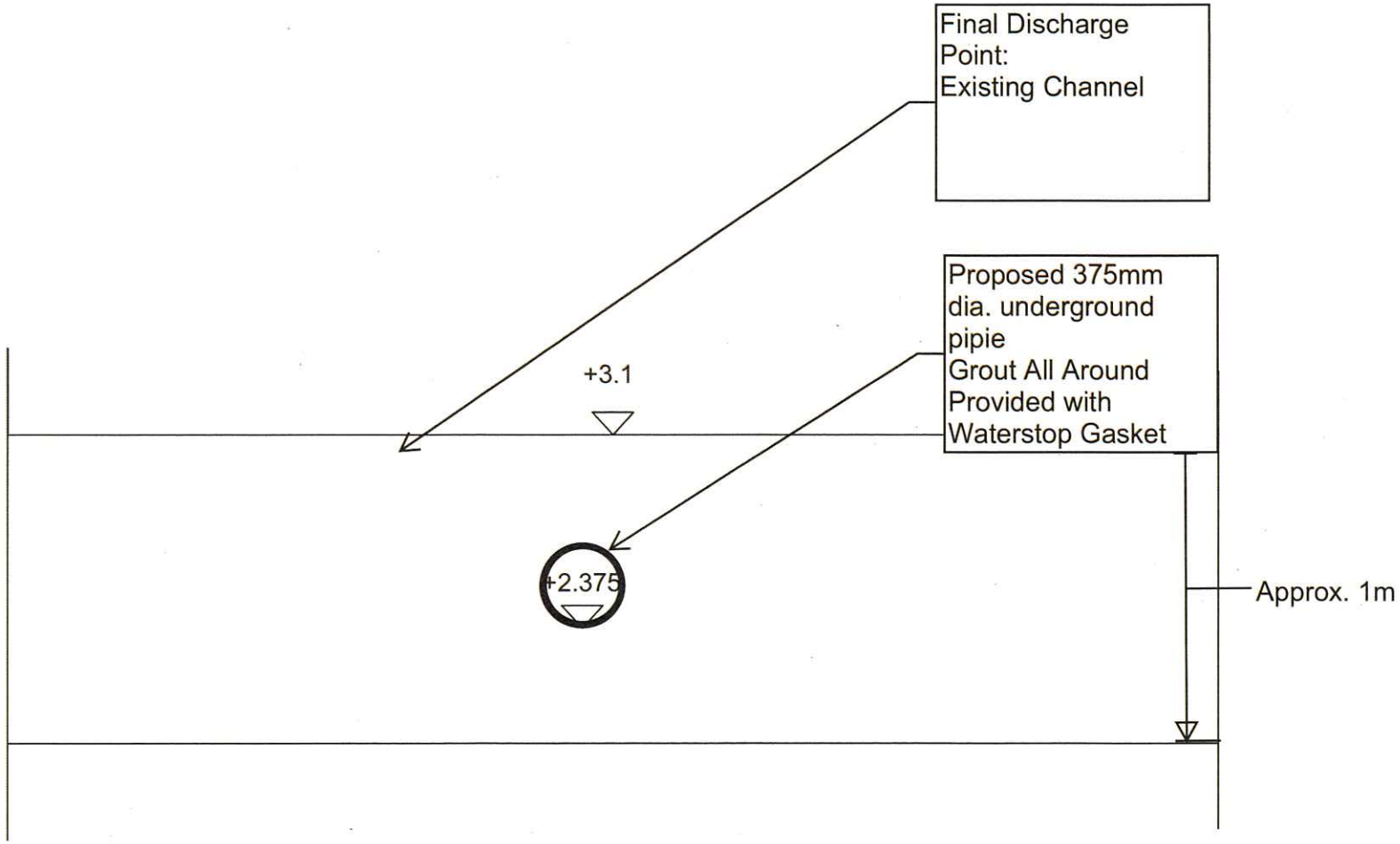


Connection Detail of Existing channel

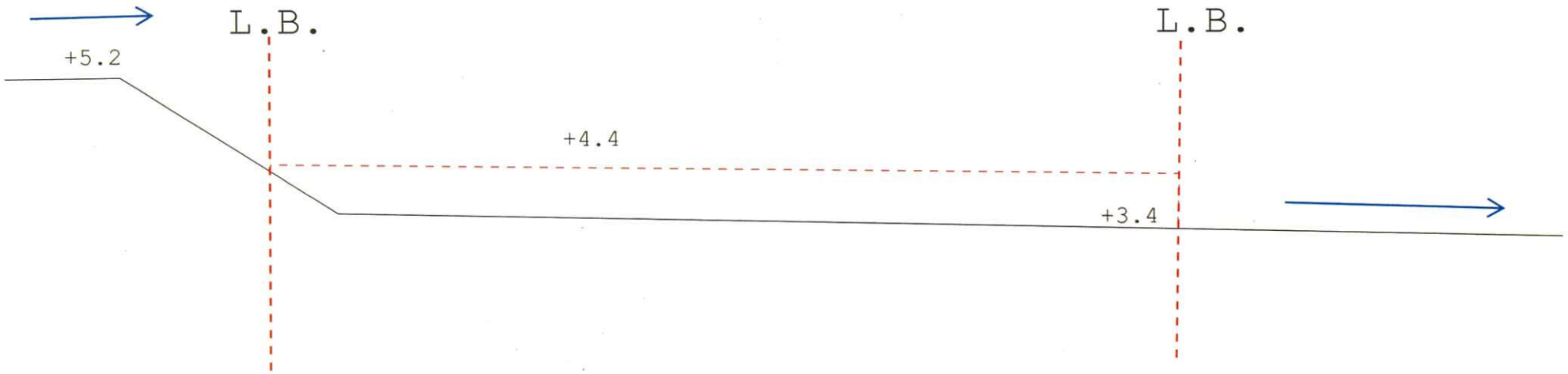


SECTION A-A

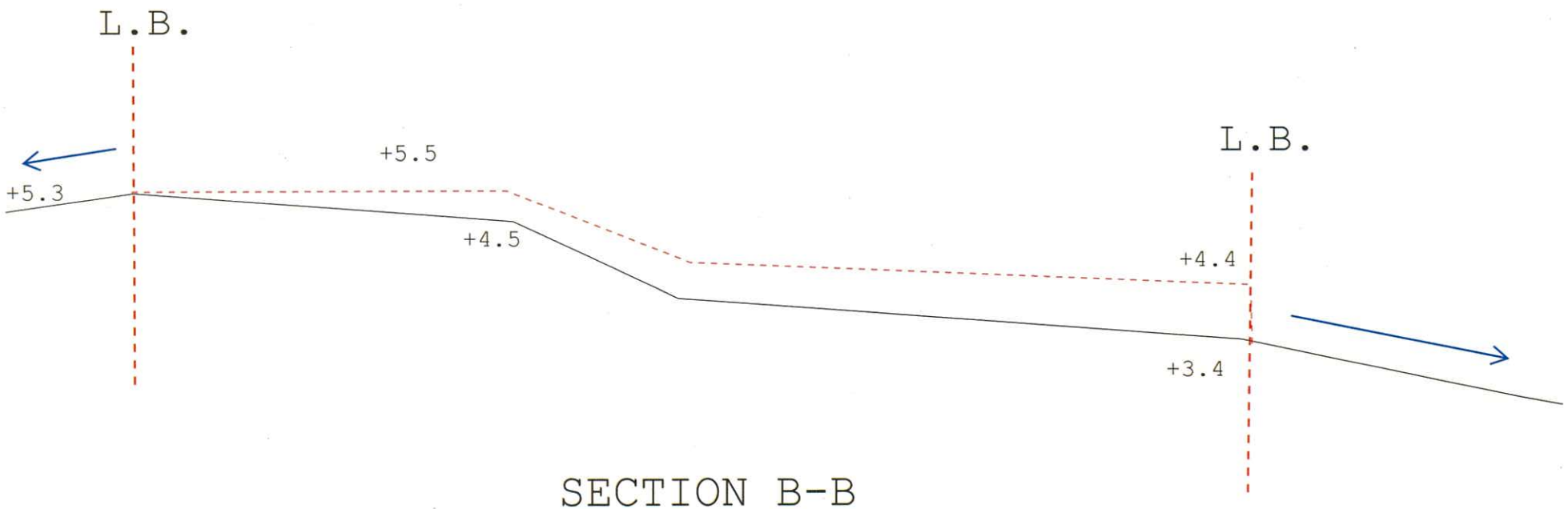


SECTION B-B

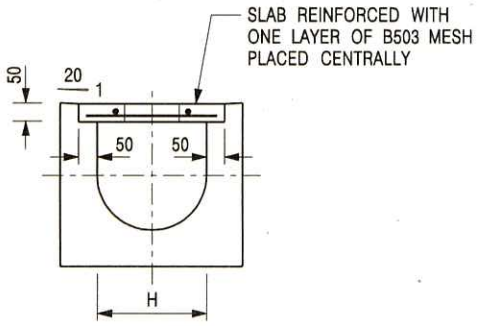


TYPICAL SECTION

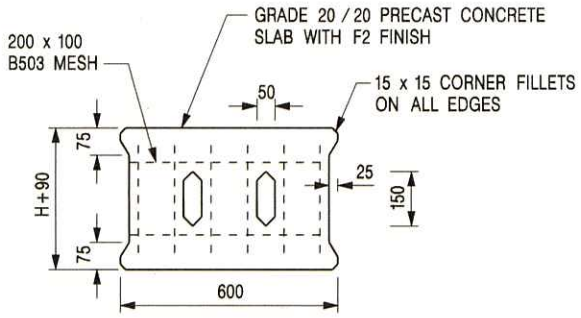


PLAN OF SLAB

## U-CHANNELS WITH PRECAST CONCRETE SLABS

(UP TO H OF 525)

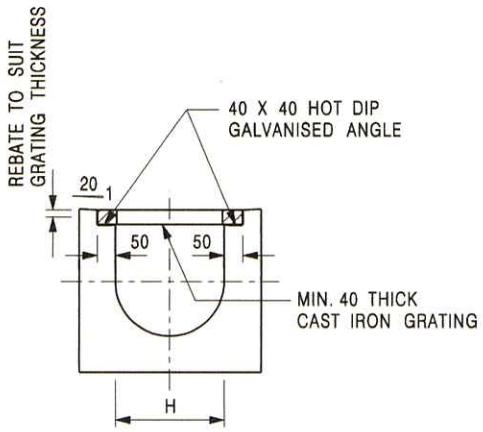


TYPICAL SECTION

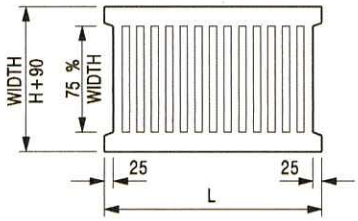


L = 600mm FOR H ≤ 375mm
L = 400mm FOR H > 375mm

CAST IRON GRATING

(DIMENSIONS ARE FOR GUIDANCE ONLY, CONTRACTOR MAY SUBMIT EQUIVALENT TYPE)

## U-CHANNEL WITH CAST IRON GRATING

(UP TO H OF 525)

NOTES:

1. ALL DIMENSIONS ARE IN MILLIMETRES.
2. H = NOMINAL CHANNEL SIZE.
3. ALL CAST IRON FOR GRATINGS SHALL BE GRADE EN-GJL-150 COMPLYING WITH BS EN 1561.
4. FOR COVERED CHANNELS TO BE HANDED OVER TO HIGHWAYS DEPARTMENT FOR MAINTENANCE, THE GRATING DETAILS SHALL FOLLOW THOSE AS SHOWN ON HyD STD. DRG. NO. H3156.

| REF. | REVISION | SIGNATURE | DATE |
|---|---|---|---|
| E | NOTES 3 & 4 AMENDED. | Original Signed | 12.2014 |
| D | NOTE 4 ADDED. | Original Signed | 06.2008 |
| C | MINOR AMENDMENT. NOTE 3 ADDED. | Original Signed | 12.2005 |
| B | NAME OF DEPARTMENT AMENDED. | Original Signed | 01.2005 |
| A | CAST IRON GRATING AMENDED. | Original Signed | 12.2002 |

# COVER SLAB AND CAST IRON GRATING FOR CHANNELS

CEDD CIVIL ENGINEERING AND DEVELOPMENT DEPARTMENT

SCALE 1 : 20

DATE JAN 1991

DRAWING NO. C2412E

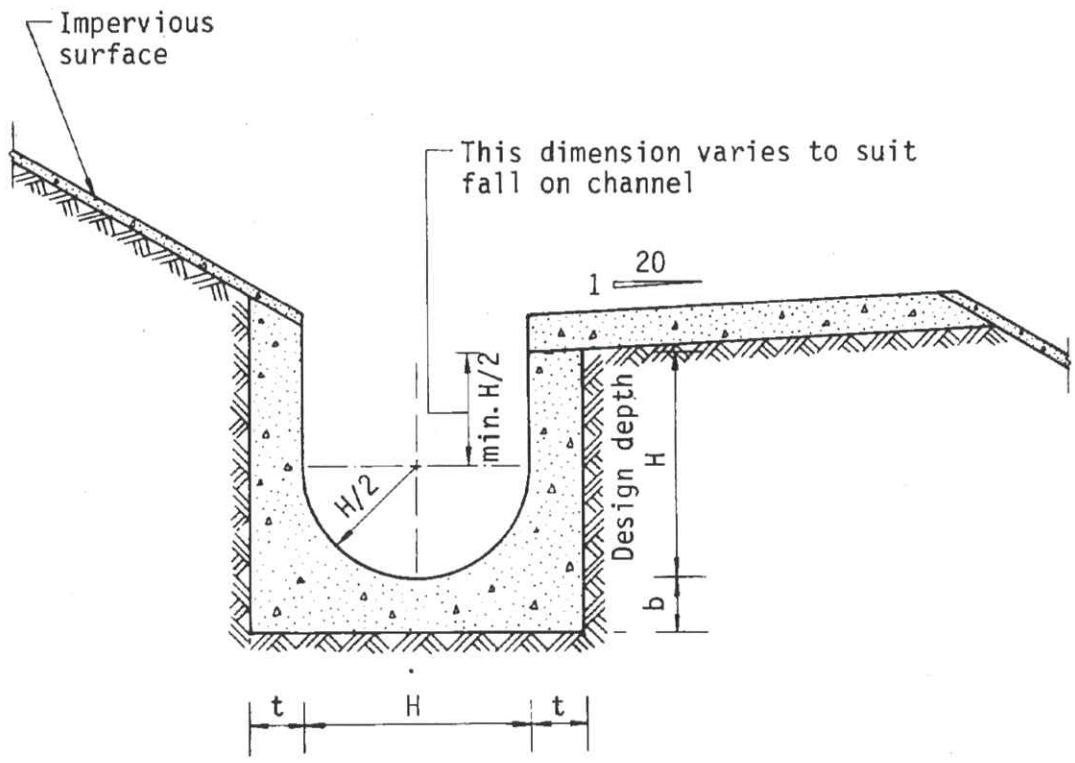


| Dimensions of U - channel | | |
|---|---|---|
| Nominal size of channel H (mm) | Thickness t (mm) | Thickness b (mm) |
| 225 to 600 | 150 | 150 |
| 675 to 1200 | 175 | 225 |

Figure 8.11 - Typical U-channel Details

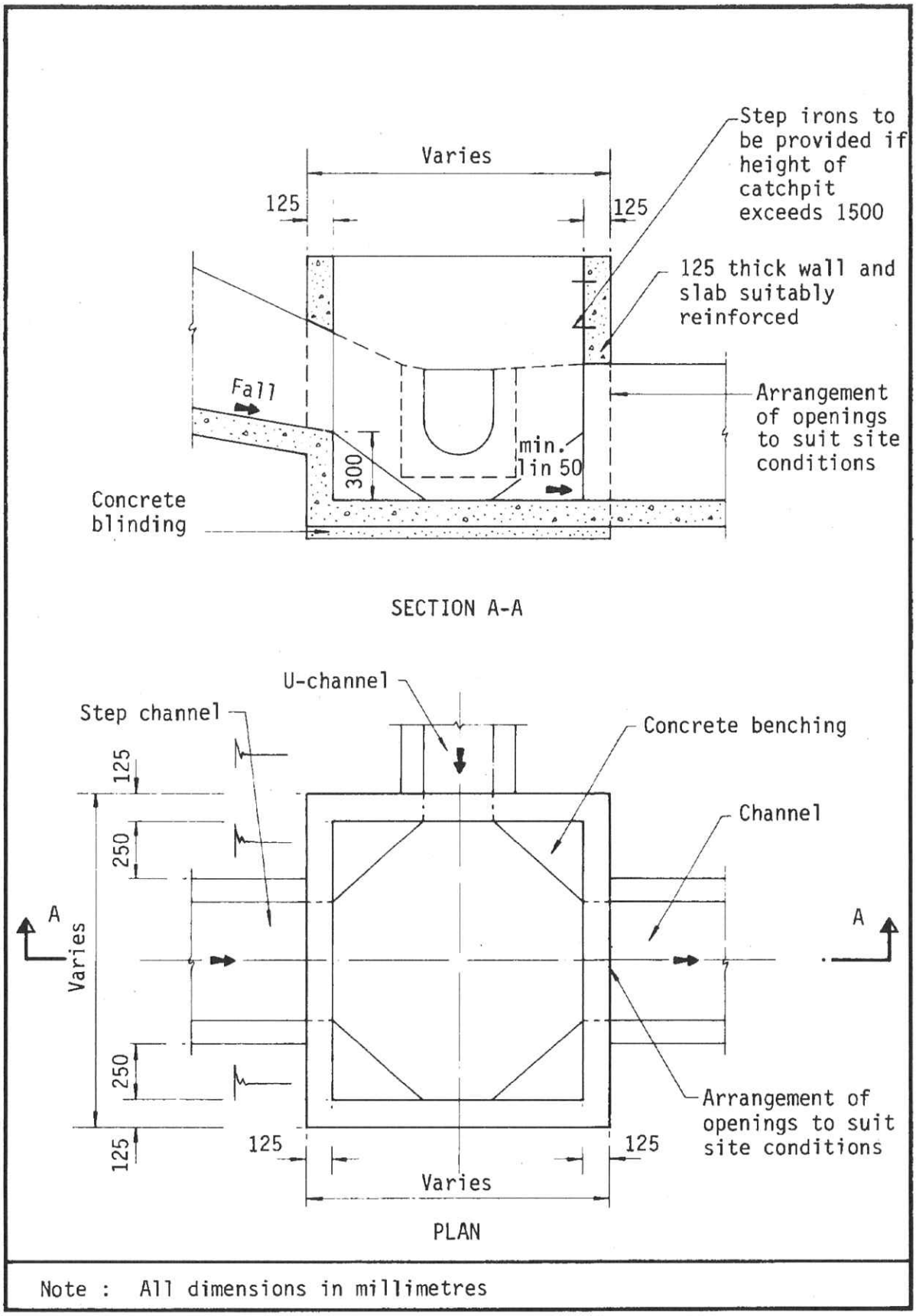


Note : All dimensions in millimetres

Figure 8.10 - Typical Details of Catchpits

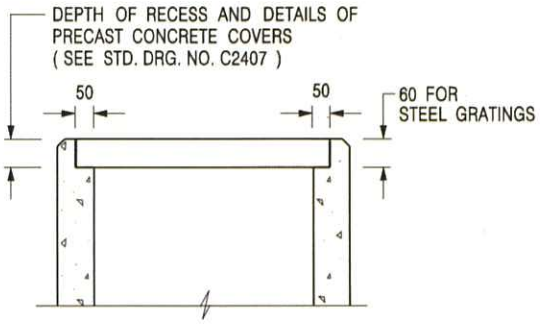


## ALTERNATIVE TOP SECTION FOR PRECAST CONCRETE COVERS / GRATINGS

NOTES:

1. ALL DIMENSIONS ARE IN MILLIMETRES.
2. ALL CONCRETE SHALL BE GRADE 20 /20.
3. CONCRETE SURFACE FINISH SHALL BE CLASS U2 OR F2 AS APPROPRIATE.
4. FOR DETAILS OF JOINT, REFER TO STD. DRG. NO. C2413.
5. CONCRETE TO BE COLOURED AS SPECIFIED.
6. UNLESS REQUESTED BY THE MAINTENANCE PARTY AND AS DIRECTED BY THE ENGINEER, CATCHPIT WITH TRAP IS NORMALLY NOT PREFERRED DUE TO PONDING PROBLEM.
7. UPON THE REQUEST FROM MAINTENANCE PARTY, DRAIN PIPES AT CATCHPIT BASE CAN BE USED BUT THIS IS FOR CATCHPITS LOCATED AT SLOPE TOE ONLY AND AS DIRECTED BY THE ENGINEER.
8. FOR CATCHPITS CONSTRUCTED ON OR ADJACENT TO A FOOTPATH, STEEL GRATINGS ( SEE DETAIL 'A' ON STD. DRG. NO. C2405 ) OR CONCRETE COVERS ( SEE STD. DRG. NO. C2407 ) SHALL BE PROVIDED AS DIRECTED BY THE ENGINEER.
9. IF INSTRUCTED BY THE ENGINEER, HANDRAILING ( SEE DETAIL 'G' ON STD. DRG. NO. C2405; EXCEPT ON THE UPSLOPE SIDE ) IN LIEU OF STEEL GRATINGS OR CONCRETE COVERS CAN BE ACCEPTED AS AN ALTERNATIVE SAFETY MEASURE FOR CATCHPITS NOT ON A FOOTPATH NOR ADJACENT TO IT. TOP OF THE HANDRAILING SHALL BE 1 000 mm MIN. MEASURED FROM THE ADJACENT GROUND LEVEL.
10. MINIMUM INTERNAL CATCHPIT WIDTH SHALL BE 1 000 mm FOR CATCHPITS WITH A HEIGHT EXCEEDING 1 000 mm MEASURED FROM THE INVERT LEVEL TO THE ADJACENT GROUND LEVEL. AND, STEP IRONS ( SEE DSD STD. DRG. NO. DS1043 ) AT 300 c/c STAGGERED SHALL BE PROVIDED. THICKNESS OF CATCHPIT WALL FOR INSTALLATION OF STEP IRONS SHALL BE INCREASED TO 150 mm.
11. FOR RETROFITTING AN EXISTING CATCHPIT WITH STEEL GRATING, SEE DETAIL 'F' ON STD. DRG. NO. C2405.
12. SUBJECT TO THE APPROVAL OF THE ENGINEER, OTHER MATERIALS CAN ALSO BE USED AS COVERS / GRATINGS.

| REF. | REVISION | SIGNATURE | DATE |
|---|---|---|---|
| – | FORMER DRG. NO. C2406J. | Original Signed | 03.2015 |

# CATCHPIT WITH TRAP (SHEET 2 OF 2)

CEDD CIVIL ENGINEERING AND DEVELOPMENT DEPARTMENT

SCALE 1 : 20

DATE JAN 1991

DRAWING NO. C2406 /2

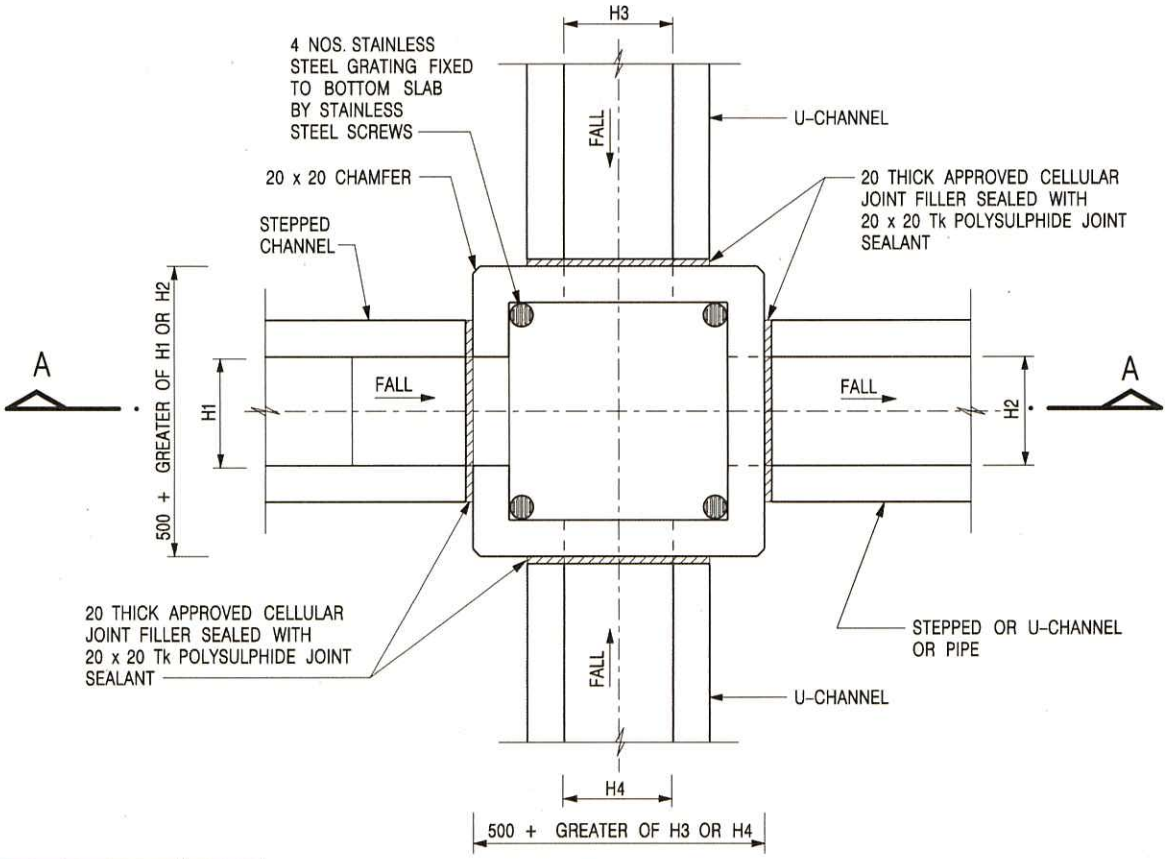


PLAN

| NOMINAL SIZE (LARGEST OF H1, H2, H3 & H4) | B |
|---|---|
| 300 – 600 | 150 |
| 675 – 900 | 175 |

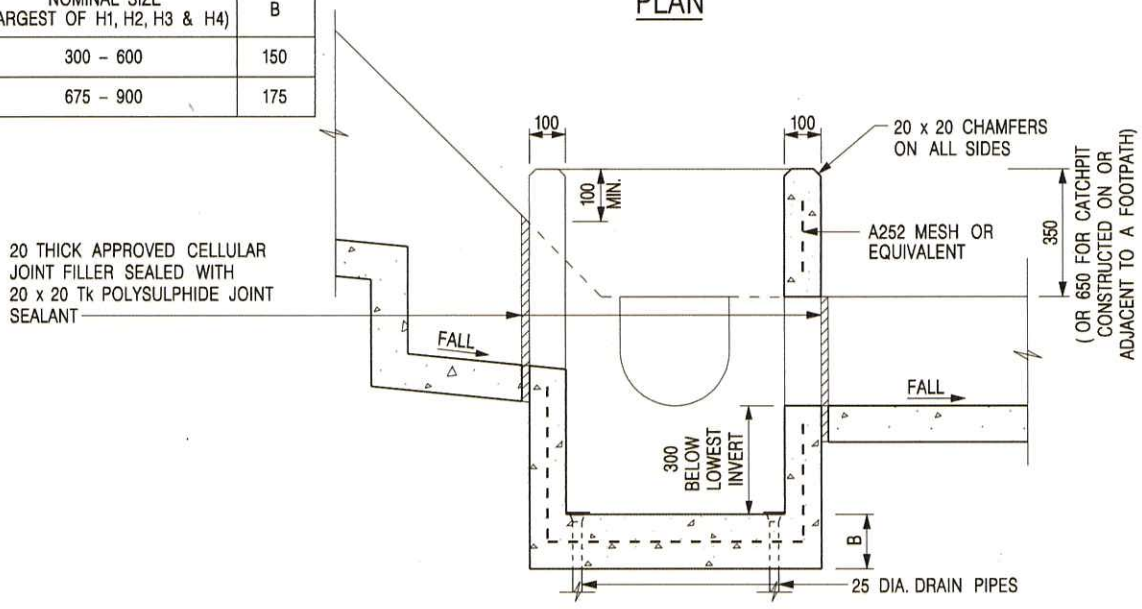


SECTION A – A

NOTES:

1. ALL DIMENSIONS ARE IN MILLIMETRES.
2. REFER TO SHEET 2 FOR OTHER NOTES.

| REF. | REVISION | SIGNATURE | DATE |
|---|---|---|---|
| – | FORMER DRG. NO. C2406J. | Original Signed | 03.2015 |

# CATCHPIT WITH TRAP

(SHEET 1 OF 2)

CEDD CIVIL ENGINEERING AND DEVELOPMENT DEPARTMENT

SCALE 1 : 20

DATE JAN 1991

DRAWING NO. C2406 /1

卓越工程 建設香港

We Engineer Hong Kong's Development

R-Riches
Property Consultants Ltd.

**Appendix Ib of RNTPC Paper No. A/YL-ST/646**

盈卓物業顧問有限公司

Our Ref. : DD99 Lot 247 & VL
Your Ref. : TPB/A/YL-ST/646

The Secretary
Town Planning Board
15/F, North Point Government office
333 Java Road
North Point, Hong Kong

**By Email**

20 June 2023

Dear Sir,

**2nd Further Information**

**Proposed Temporary Warehouse (Excluding Dangerous Goods Godown) with Ancillary Office and Canteen for a Period of 3 Years and Associated Filling of Land in "Green Belt" Zone, Various Lots in D.D. 99, Chau Tau, Yuen Long**

**(S.16 Planning Application No. A/YL-ST/646)**

We are writing to submit Further Information to address departmental comments of the subject application (**Appendix I**).

Should you require more information regarding the application, please contact our Mr. Orpheus LEE at or the undersigned at your convenience. Thank you for your kind attention.

Yours faithfully,

For and on behalf of
**R-riches Property Consultants Limited**

**Louis TSE**
Town Planner

cc DPO/FSYLE, PlanD (Attn.: Ms. Alice CHEUNG email: ayycheung@pland.gov.hk )
(Attn.: Mr. Davy LAM email: dlylam@pland.gov.hk )

**Responses-to-Comments**

**Proposed Temporary Warehouse (Excluding Dangerous Goods Godown) with Ancillary Office and Canteen for a Period of 3 Years and Associated Filling of Land in "Green Belt" Zone, Various Lots in D.D. 99, Chau Tau, Yuen Long**

**(Application No. A/YL-ST/646)**

(i) A RtoC Table:

| Departmental Comments | | Applicant's Responses |
|---|---|---|
| **1. Comments of Chief Town Planner, Urban Design & Landscape, Planning Department (Contact Person: Mr. NG Tat Yuen, Henry; Tel: 3565 3950)** | | |
| (a) | Two existing trees were recorded (i.e. T01: Macaranga tanarius and T02: Litsea monopetala) within the site boundary in Annex 1 - Tree Survey Report (Date of Survey 21 April 2023) and are proposed to be felled with compensatory planting of 2 new trees as shown on Plan 1. According to our site visit on 22.5.2023, a number of existing trees were identified within the site but have not been recorded in the advanced FI-1 (e.g. trees at the west and southwest of the site). The applicant is advised to verify and suitably update the information of existing trees within the site and proposed mitigation measures. | According to the revised tree survey report conducted on 13/6/2023, a total of 12 nos. of trees were recorded within the site boundary (**Annex I**). No OVT or protected species has been identified in accordance with the DEVB TC(W) No. 5/2020 – Registration and Preservation of Old and Valuable Trees and the Forests and Countryside Ordinance (Cap.96) respectively. Among the 12 identified trees, 7 of them (T1 to T2, T8 to T12) are proposed to be felled while 5 of them (T3 to T7) will be preserved at the application site (the Site) (**Plan 1**).<br><br>Due to the felling of existing trees within the Site, 7 new trees (N1 to N7) are proposed to be planted to compensate for the loss of the 7 existing trees (**Plan 1**). They will be planted at the Northern and Southern portion of the Site. All these new trees within the Site will be maintained by the applicant. |
| **2. Comments of Commissioner for Transport, Transport Department (Contact Person: Mr. LEUNG Chi Kong; Tel: 2399 2778)** | | |
| (a) | From the swept path shown in Drawing No. Plan 13, it is noted that container vehicle will encroach into the opposite traffic lane when leaving the site. Please review. | The Site is assessable from Lok Ma Chau Road via the proposed run-in/out (**Plan 2**). Although the swept path analysis of container vehicle will encroach into the opposite traffic lane when egressing from the Site and making a left-turn, it is envisaged that the time required for encroachment will |

<table>
<tr><td></td><td></td><td>be very short. Also, the alignment of section of Lok Ma Chau Road outside the Site is straight and clear sightline could be provided for the proposed run-in/out at Lok Ma Chau Road. In view of the above, it is considered that the use of the proposed run-in out is acceptable from traffic engineering point of view.</td></tr>
<tr><td>(b)</td><td>Please supplement the total number of employee so as to justify the sufficiency of car parking spaces.</td><td>The Site would be able to accommodate not more than 15 employees. 4 nos. of private car parking spaces are provided for staff. Furthermore, the nearest bus stop serving the Site is located at approximately 5 m west of the Site. Therefore, employees could also access the Site by public transport services.</td></tr>
<tr><td>(c)</td><td>The subject site is connected to Lok Ma Chau Road via a section of a local access which is not managed by Transport Department. The land status of the local access should be clarified with Lands Department by the applicant. Moreover, the management and maintenance responsibilities of the local access should be clarified with the relevant lands and maintenance authorities accordingly.</td><td>Noted. The applicant will liaise with respective land owner(s) and Department(s) regarding the management and maintenance responsibilities of the local access after planning approval has been granted from the Town Planning Board.</td></tr>
<tr><td>(d)</td><td>Please advise the construction programme of the filling work and the associated trip generation of the construction vehicles under peak hours.</td><td>Concrete mixer trunk will be deployed for transportation of concrete to facilitate the land filling works during the construction stage. In view of the small scale of land filling works, it is estimated that not more than 4 trips will be generated and attracted by the Site per day during peak hours, details are as follows:
<table>
<tr><th>Time Period</th><th>Trip Generation</th><th>Trip Attraction</th><th>Total</th></tr>
<tr><td>09:00 – 10:00</td><td>1</td><td>1</td><td>2</td></tr>
</table></td></tr>
</table>

| | | |
|---|---|---|
| | | 17:00 – 18:00 \| 1 \| 1 \| 2<br><br>As number of vehicular trips generated and attracted by the proposed development is minimal, adverse traffic impact to nearby road network should not be anticipated. |
| (e) | Based on the layout plan in Drawing No. Plan 10, there is an existing temporary structure located in close proximity to the ingress / egress point. Please review. | The existing temporary structure located in close proximity to the ingress / egress of the Site will be demolished by respective Department to facilitate the run-in/out proposed under the PWP Item No. 7856 CL – Development of Lok Ma Chau Loop – Main Works Projects Package 1 – Site Formation and Infrastructure Works. |

**LANDSCAPE PROPOSAL**

| | |
|---|---|
| APPLICATION SITE AREA | : 4,242 $m^2$ (ABOUT) |
| NO. OF EXISTING TREES | : 12 (T1-T12) |
| NO. OF TREES WILL BE FELLED | : 7 (T1,T2,T8-T12) |
| NO. OF TREES WILL BE PRESERVED | : 5 (T3-T7) |
| NO. OF TREES WILL BE PLANTED | : 7 (N1-N7) |
| SPECIES OF TREES | : *BAUHINIA BLAKEANA* |
| SPACING OF TREES | : NOT MORE THAN 4m |
| HEIGHT OF TREES | : NOT LESS THAN 2.75m |
| DIMENSION OF TREE PITS | : 1m (W) X 1m (L) X 1.2m (D) |

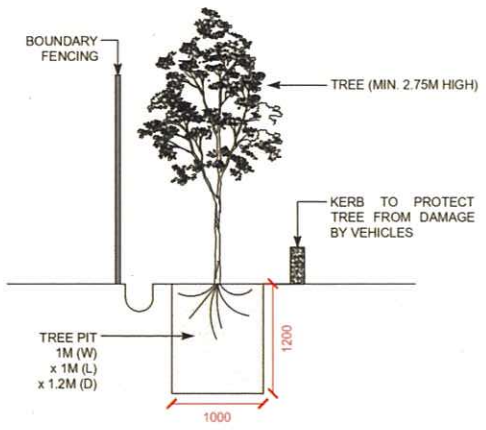


**TYPICAL DIMENSIONS**
**SCALE 1:100**

(INDICATIVE ONLY)

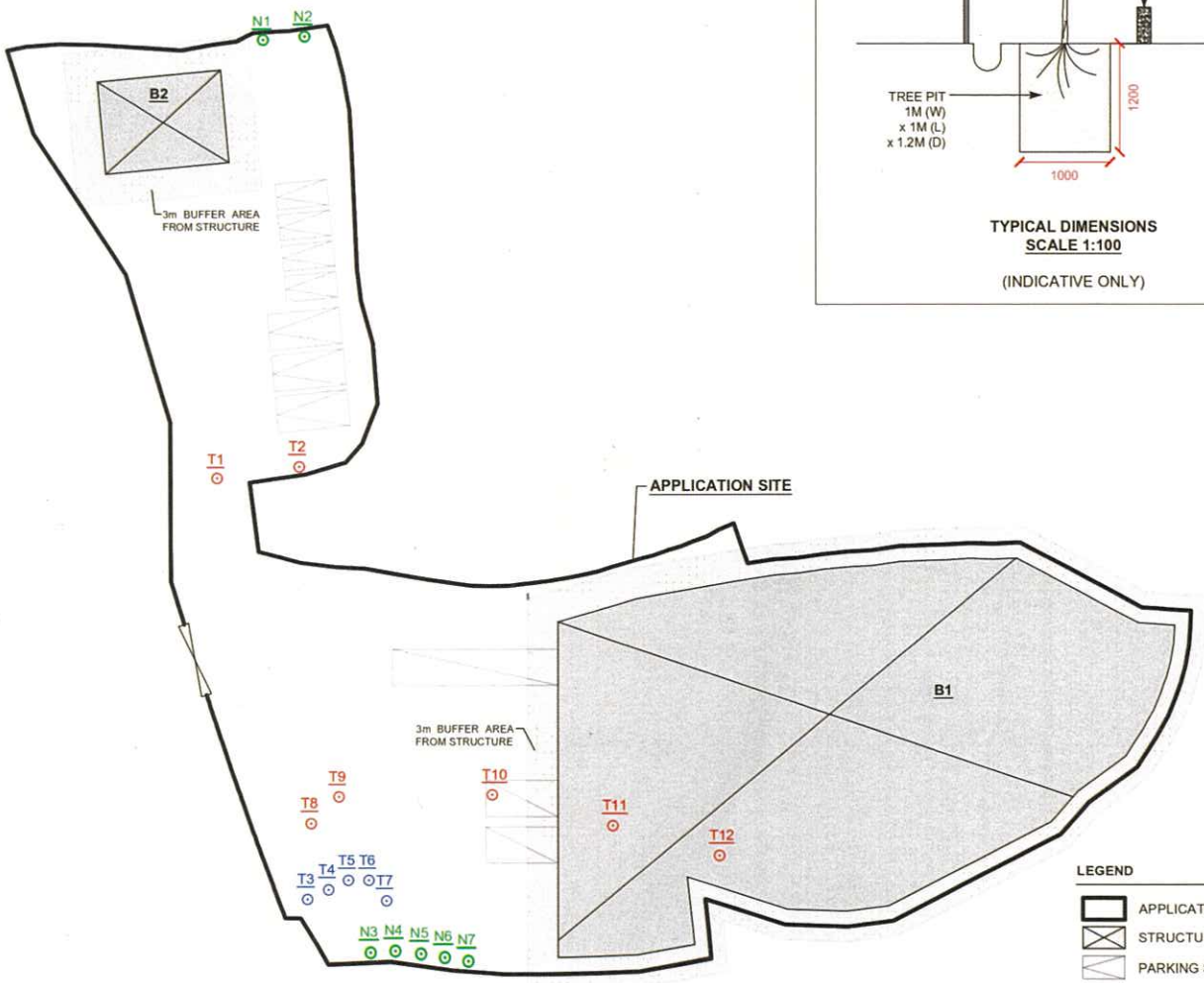


**LEGEND**

- APPLICATION SITE
- STRUCTURE
- PARKING SPACE
- L/UL SPACE
- INGRESS / EGRESS
- EXISTING TREES (WILL BE FELLED)
- PROPOSED NEW TREES
- EXISTING TREES (WILL BE PRESERVED)

**NOTES:**

1) THE APPLICANT WILL MAINTAIN TREES IN GOOD CONDITION DURING THE PLANNING APPROVAL PERIOD.
2) THE APPLICANT WOULD REPLACE TREES WHICH ARE DYING OR DEAD DURING THE PLANNING APPROVAL PERIOD.
3) THE APPLICANT WOULD PROVIDE ADEQUATE IRRIGATION FOR TREES.

PLANNING CONSULTANT

R-Riches Property Consultants Ltd.

PROJECT

PROPOSED TEMPORARY WAREHOUSE WITH ANCILLARY OFFICE AND CANTEEN FOR A PERIOD OF 3 YEARS AND ASSOCIATED FILLING OF LAND

SITE LOCATION

VARIOUS LOTS IN D.D. 99, CHAU TAU, NEW TERRITORIES

| | |
|---|---|
| SCALE | 1 : 700 @ A4 |
| DRAWN BY: MN | DATE: 15.2.2023 |
| CHECKED BY: OL | DATE: 16.6.2023 |
| APPROVED BY: | DATE: |
| DWG. TITLE | LANDSCAPE PROPOSAL |
| DWG NO: PLAN 1 | VER: 002 |

**SWEPT PATH ANALYSIS**

TYPE OF VEHICLE : CONTAINER VEHICLE
DIMENSION OF VEHICLE : 2.5 m (W) X 16 m (L)

*SWEPT PATHS GENERATED BY AUTODESK VEHICLE TRACKING 2019*

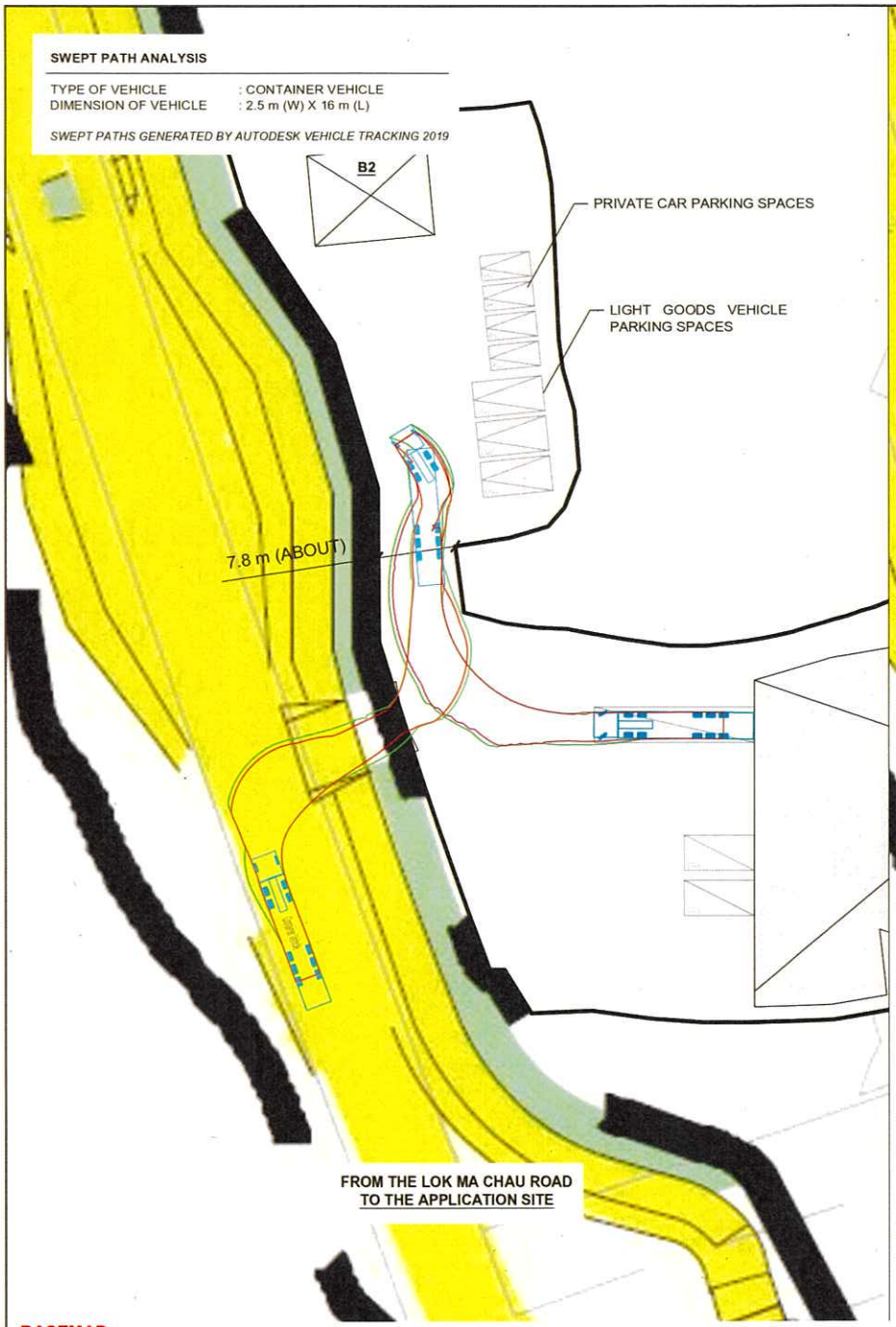


**FROM THE LOK MA CHAU ROAD TO THE APPLICATION SITE**

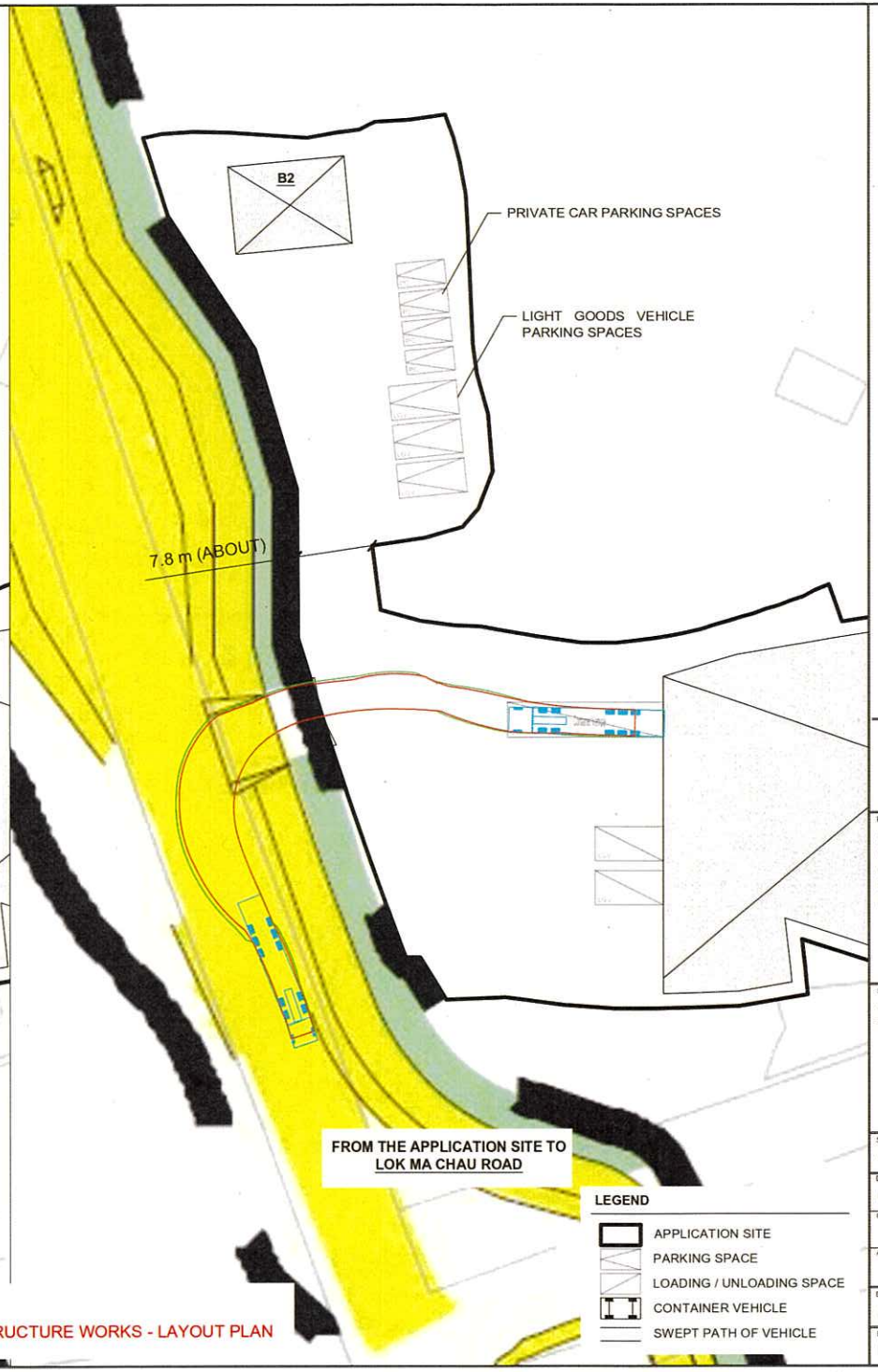


**FROM THE APPLICATION SITE TO LOK MA CHAU ROAD**

**LEGEND**

- APPLICATION SITE
- PARKING SPACE
- LOADING / UNLOADING SPACE
- CONTAINER VEHICLE
- SWEPT PATH OF VEHICLE

NORTH
W E
S

PLANNING CONSULTANT

R-Riches Property Consultants Ltd.

PROJECT

PROPOSED TEMPORARY WAREHOUSE WITH ANCILLARY OFFICE AND CANTEEN FOR A PERIOD OF 3 YEARS AND ASSOCIATED FILLING OF LAND

SITE LOCATION

VARIOUS LOTS IN D.D. 99, CHAU TAU, NEW TERRITORIES

| | |
|---|---|
| SCALE | 1 : 700 @ A4 |
| DRAWN BY | MN |
| DATE | 2.2.2023 |
| CHECKED BY | |
| DATE | |
| APPROVED BY | |
| DATE | |
| DWG. TITLE | SWEPT PATH ANALYSIS |
| DWG NO. | PLAN 2 |
| VER. | 001 |

**BASEMAP**
PWP ITEM NO. 7856 CL -
DEVELOPMENT OF LOK MA CHAU LOOP - MAIN WORKS PACKAGE 1 - SITE FORMATION AND INFRASTRUCTURE WORKS - LAYOUT PLAN

永豪園綠化工程有限公司
WING HO YUEN LANDSCAPING CO., LTD.

# Tree Survey Report

## (Rev.01)

**Date of Survey: 21st April, 13th June 2023**

**Location:**
**Private Area, Chau Tau West Road, Lok Ma Chau**

Prepared by:

Mak Ka Hei

Date: 14th June 2023

# Table of contents

1. Introduction 3

2. Summary of Existing Trees 4

Appendix:

I. Tree Survey Plan

II. Tree Survey Schedule

III. Photo Records

Disclaimer:

The tree survey conducted indicates the condition of the surveyed trees at the time of inspection only. The assessments of amenity value, form, health and structural condition of the trees surveyed are based on visual inspection from the ground only. No aerial inspection, root digging or mapping, or diagnostic testing has been conducted as part of this survey. Wing Ho Yuen Landscaping Company Limited cannot accept responsibility for future failure or defects detected after the time of inspection of the trees surveyed in this report.

# 1. Introduction

The survey conducted is to record all the existing trees in the tree survey boundary. The survey include tree species identification, tree tagging with durable labels, the measurements of overall tree height, Diameter at Breast Height (DBH), average crown spread, the evaluation on amenity value, form, health and structural conditions.

The tree survey was conducted on 21st April and 13th June 2023. Plants with DBH less than 95mm were not recorded in the survey.

## 2. Summary of Existing Trees

The surveyed site is located at Private Area, Chau Tau West Road, Lok Ma Chau.

At the time of inspection on 21st April and 13th June 2023, **12 nos.** tree were found within the Site. **No** dead tree was recorded in the surveyed area. Location of individual tree refers to Appendix I.

Details of tree conditions and photo records for individual tree are recorded in the Appendix II and Appendix III respectively.

# Appendix I – Tree Survey Plan

# Tree Survey Plan

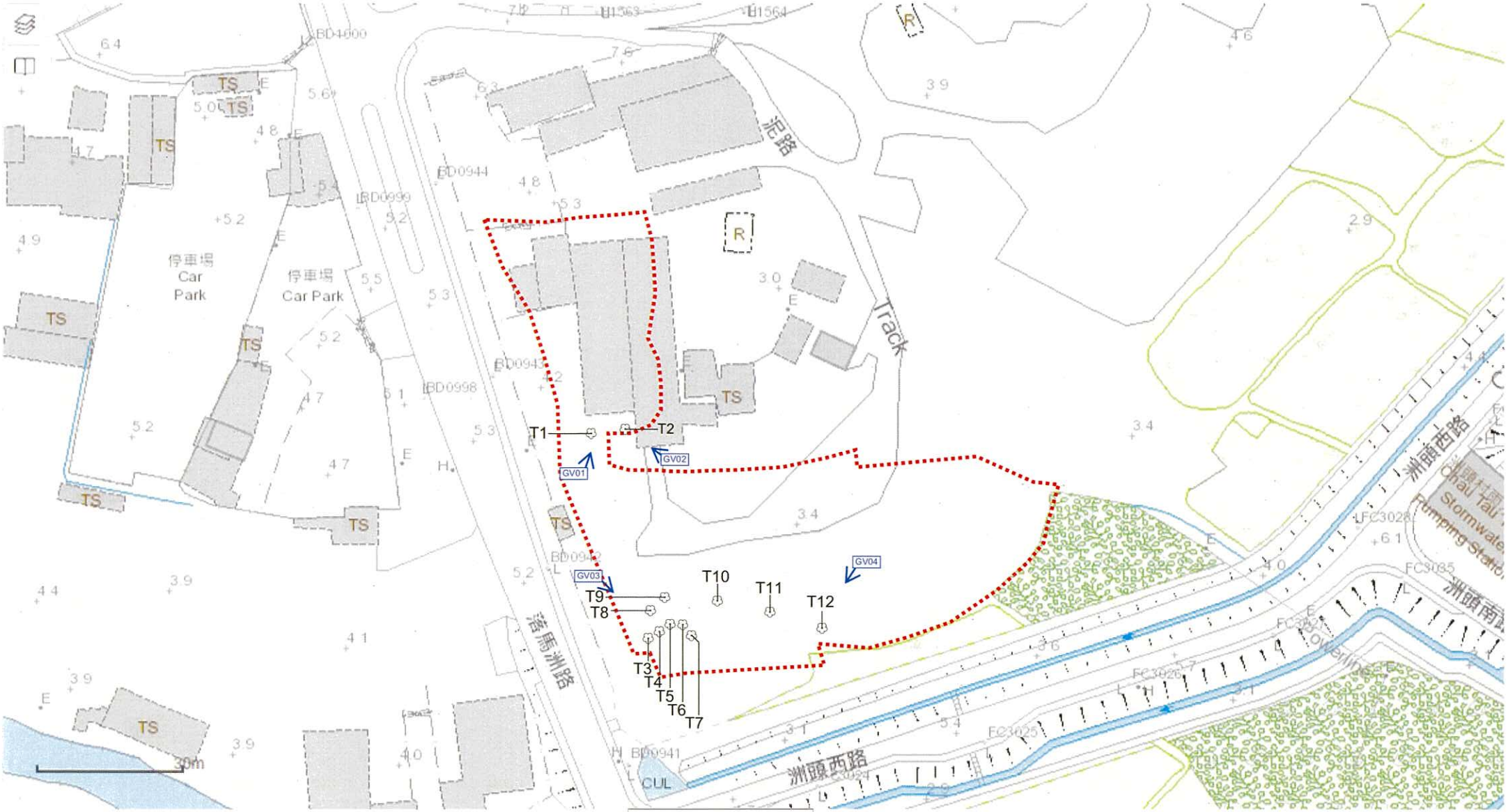


**LEGEND**

: Surveyed Tree

GVXX : General view

-------- : Site Boundary

# Appendix II –Tree Survey Schedule

**Tree Survey Schedule**

Location: Private Area, Chau Tau West Road, Lok Ma Chau
Tree surveyor(s): Mak Ka Hei
Field Survey was conducted on: 21 April, 13 June 2023

永豪園綠化工程有限公司
WING HO YUEN LANDSCAPING CO., LTD.

| Tree No. | Tree Species | | Tree Size Measurements | | | Amenity Value | Form | Health Condition | Structural Condition | Suitability for Transplanting | Remarks |
|---|---|---|---|---|---|---|---|---|---|---|---|
| | Botanical Name | Chinese Name | Overall Height (m) | DBH (mm) | Average Crown Spread (m) | High /Med /Low | Good /Fair /Poor | Good /Fair /Poor /Dead | Good /Fair /Poor | High /Med /Low | |
| T01 | *Macaranga tanarius* | 血桐 | 7.5 | 360 | 9.0 | Low | Poor | Poor | Poor | Low | broken branch, broken trunk, climbers, abnormal bark cracks, dead branch with fungal fruiting bodies, decay at trunk base, heavy lateral limb, sparse foliage, abnormal leaf size |
| T02 | *Litsea monopetala* | 假柿木薑子 (假柿樹) | 9.0 | 340 | 5.5 | Low | Poor | Poor | Poor | Low | topped with epicormics |
| T03 | *Leucaena leucocephala* | 銀合歡 | 10.0 | 260 | 6.0 | Low | Poor | Poor | Poor | Low | co-dominant trunks |
| T04 | *Leucaena leucocephala* | 銀合歡 | 10.0 | 240 | 7.0 | Low | Poor | Poor | Poor | Low | - |
| T05 | *Leucaena leucocephala* | 銀合歡 | 6.0 | 140 | 4.0 | Low | Poor | Poor | Poor | Low | - |
| T06 | *Leucaena leucocephala* | 銀合歡 | 7.0 | 150 | 4.0 | Low | Poor | Poor | Poor | Low | - |
| T07 | *Leucaena leucocephala* | 銀合歡 | 9.0 | 170 | 8.0 | Low | Poor | Poor | Poor | Low | leaning |
| T08 | *Macaranga tanarius* | 血桐 | 8.0 | 190 | 6.0 | Low | Poor | Poor | Poor | Low | co-dominant trunks |
| T09 | *Leucaena leucocephala* | 銀合歡 | 10.0 | 240 | 7.0 | Low | Poor | Poor | Poor | Low | co-dominant trunks |
| T10 | *Macaranga tanarius* | 血桐 | 9.0 | 220 | 6.0 | Low | Poor | Poor | Poor | Low | - |
| T11 | *Leucaena leucocephala* | 銀合歡 | 9.0 | 210 | 6.0 | Low | Poor | Poor | Poor | Low | vine on tree |
| T12 | *Macaranga tanarius* | 血桐 | 7.0 | 220 | 5.0 | Low | Poor | Poor | Poor | Low | vine on tree |

**Notes: Amenity Value, Form, Health Condition and Structural Condition of trees were obtained by Visual Assessment Only.**

# Appendix III – Photo Records

# General View

General view 01

General view 02

# General View

General view 03

General view 04

# Photo Records

T1 (Overview)

T1 Broken branch_1

T1 Broken branch_2

T1 Broken brranch_3

# Photo Records

T1 Broken trunk

T1 Climbers (Abnormal bark cracks)

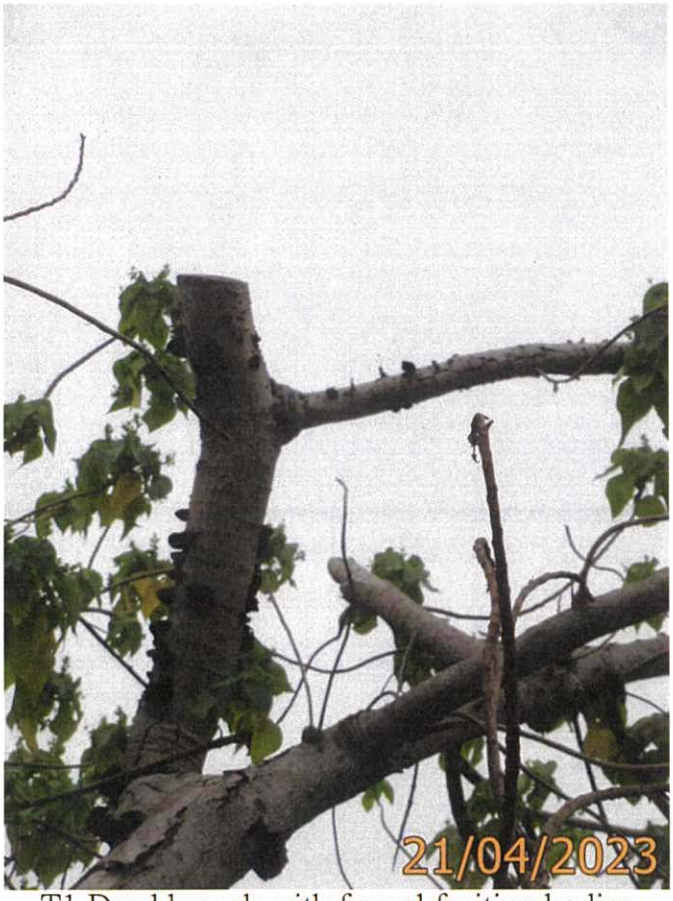


T1 Dead branch with fungal fruiting bodies

T1 Decay at trunk base

# Photo Records

T1 Heavy lateral limb

T1 Sparse foliage (Abnormal leaf size)

T2 (Overview)

T2 Topped with epicormics

# Photo Records

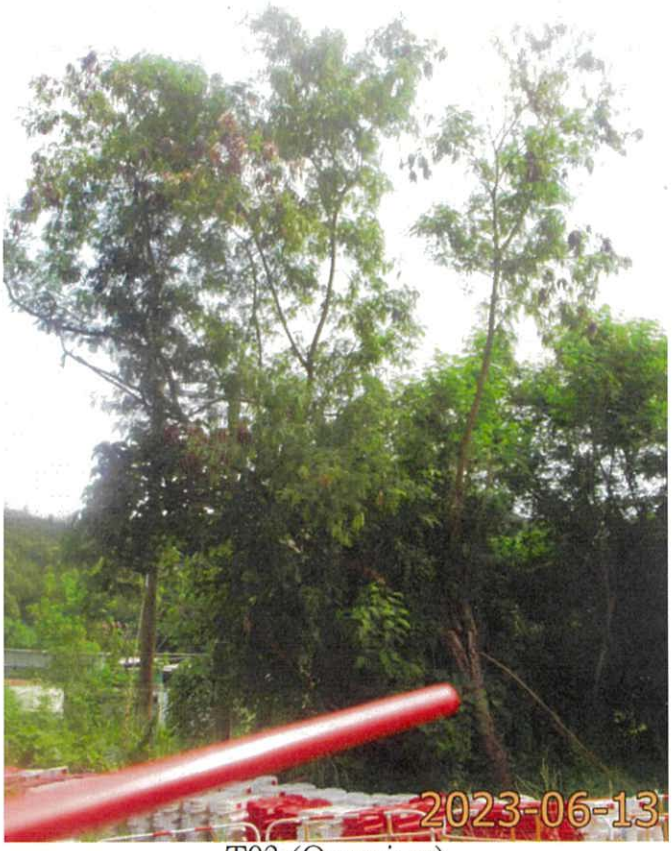

T03 (Overview)

T04 (Overview)

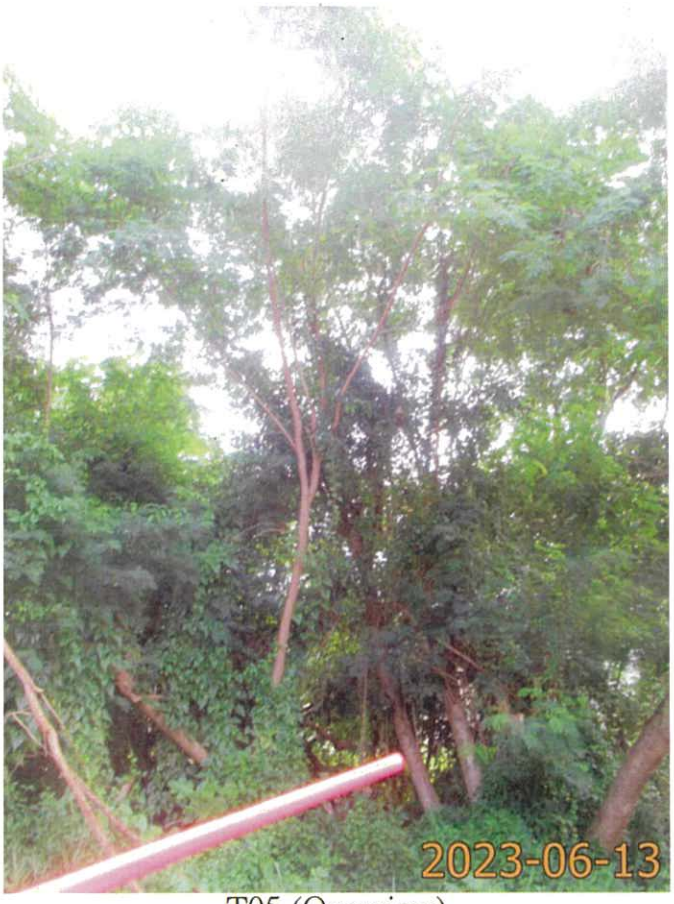

T05 (Overview)

T06 (Overview)

# Photo Records

T07 (Overview)

T08 (Overview)

T09 (Overview)

T10 (Overview)

# Photo Records

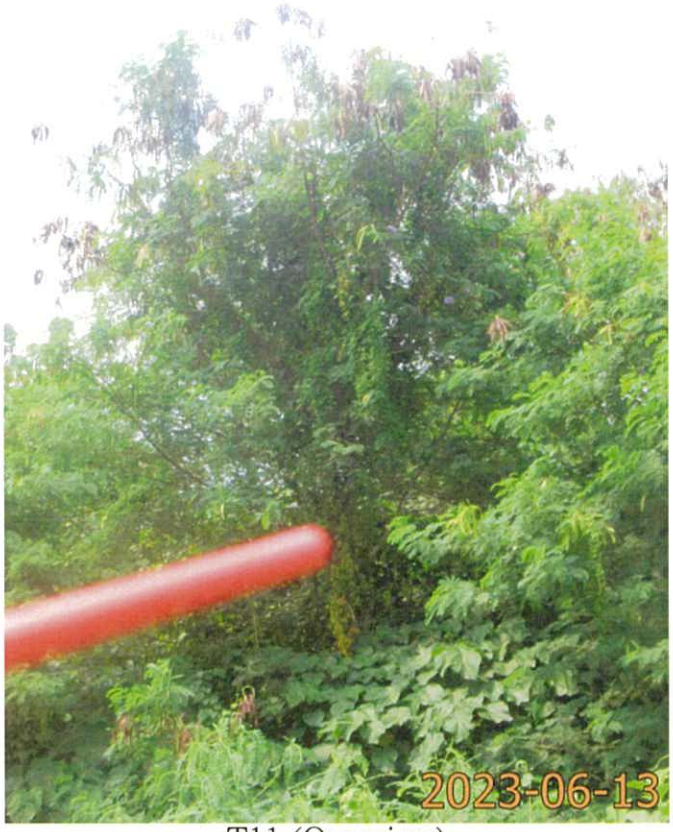


T11 (Overview)

T12 (Overview)

R-Riches
Property Consultants Ltd.

**Appendix Ic of RNTPC Paper No. A/YL-ST/646**

盈卓物業顧問有限公司

Our Ref. : DD99 Lot 247 & VL
Your Ref. : TPB/A/YL-ST/646

The Secretary
Town Planning Board
15/F, North Point Government office
333 Java Road
North Point, Hong Kong

**By Email**

25 July 2023

Dear Sir,

**3rd Further Information**

**Proposed Temporary Warehouse (Excluding Dangerous Goods Godown) with Ancillary Office and Canteen for a Period of 3 Years and Associated Filling of Land in "Green Belt" Zone, Various Lots in D.D. 99, Chau Tau, Yuen Long**

**(S.16 Planning Application No. A/YL-ST/646)**

We are writing to submit Further Information to address departmental comments of the subject application (**Appendix I**).

Should you require more information regarding the application, please contact our Mr. Orpheus LEE at . or the undersigned at your convenience. Thank you for your kind attention.

Yours faithfully,

For and on behalf of
**R-riches Property Consultants Limited**

**Louis TSE**
Town Planner

cc DPO/FSYLE, PlanD (Attn.: Ms. Alice CHEUNG email: ayycheung@pland.gov.hk )
(Attn.: Mr. Davy LAM email: dlylam@pland.gov.hk )

**Responses-to-Comments**

**Proposed Temporary Warehouse (Excluding Dangerous Goods Godown) with Ancillary Office and Canteen for a Period of 3 Years and Associated Filling of Land in "Green Belt" Zone, Various Lots in D.D. 99, Chau Tau, Yuen Long**

**(Application No. A/YL-ST/646)**

(i) Clarifications for the Proposed Development

- Despite the fact that the Site area (i.e. 4,242 $m^2$) is larger than the original 2-storey premises in Kwu Tung (3,172$m^2$), a major portion of the relocation site has to be reserved to satisfy the requirements of Government Department, i.e. the provision of fire service installations (FSIs), drainage facilities and vehicle maneuvering space. Therefore, the proposed similar scheme is to facilitate the fully relocation of the applicant's original business premises due to the implementation of Kwu Tung North New Development Area.

(ii) A RtoC Table:

| Departmental Comments | | Applicant's Responses |
|---|---|---|
| **1. Comments of Project Manager (North) and Project Manager (West), Civil Engineering and Development Department (Contact Person: Mr. WONG Ka Lun, Alan; Tel: 2417 6356)** | | |
| (a) | The subject site is within the boundary of San Tin Technopole. According to the latest tentative development programme of San Tin Technopole, the construction work and land resumption will commence after the FC funding approval tentatively by 2024. Thus, the subject site, within the boundary of San Tin Technopole, will probably be required for timely clearance and construction. | Noted. The application is only on a temporary basis and the applicant agreed to be moved out during the land resumption stage of the development of San Tin Technopole. The proposed use would be terminated if the Government resume the Site for clearance and construction and relevant works. |

| | | |
|---|---|---|
| (b) | The proposed temporary warehouse has encroached into the works area of Contract No. YL/2020/02 which commenced in September 2021 and will take about 50 months to complete. Contract No. YL/2020/02 mainly includes the construction of Western Connection Road Phase2 through widening of a section of existing Lok Ma Chau Road and the construction of associated works including footpaths, cycle tracks, slopes, retaining walls, water supply and drainage system. There is a potential interface at the concerned location for the proposed temporary warehouse under the current application. | Noted. The application site (the Site) is accessible from Lok Ma Chau Road via a local access. A proper run-in/out will be implemented by respective B/Ds under PWP Item No. 7856CL (i.e. Development of Lok Ma Chau Loop – Main Works Package 1 – Site Formation and Instructure Works), which connects the local access to Lok Ma Chau Road (**Plan 1**). The applicant will liaise with CEDD regarding the right of way and the project interface issues with the proposed development after planning approval has been granted from the Town Planning Board (the Board). |
| **2.** | **Comments of Commissioner for Transport, Transport Department (Contact Person: Mr. LEUNG Chi Kong; Tel: 2399 2778)** | |
| (a) | As CEDD is undertaking the construction works for the Development of Lok Ma Chau Loop at Lok Ma Chau Road, please check with the relevant project office of CEDD on the project interfacing issues with the proposed development, especially on the sight line issue for vehicles leaving the development site. | During the construction and operation stages, staff will be deployed at the ingress / egress to direct both incoming and outgoing vehicles to enhance road safety. The applicant will liaise with CEDD regarding the project interface and sightline issues with the proposed development after planning approval has been granted from the Town Planning Board (the Board). |
| (b) | During the construction stage:<br><br>b(i) Lok Ma Chau Road is the only road access leading to Lok Ma Chau Spur line BCP. With the resumption of cross boundary travel between Mainland and Hong Kong SAR since January 2023, the traffic flow on Lok Ma Chau Road has been kept increasing. In order to ensure the smooth operation of the BCP, the applicant is advised to re-assign the traffic trips | Concrete mixer trunk will be deployed for transportation of concrete to facilitate the land filling works during the construction stage. In view of the small scale of land filling works, it is estimated that not more than 4 trips will be generated and attracted by the Site per day, details are as follows:<br><br>**Time Period (Mon to Fri)** / **Trip Generation** / **Trip Attraction** / **Total**<br>07:00 – 10:00 / 0 / 0 / 0 |

<table>
<tr>
<td></td>
<td>derived from the proposed development during the construction stage from the peak hours [07:00 to 09:00; and 13:00 to 15:00] to non-peak hours to minimize the traffic impact to the existing road network.<br><br>b(ii) Please provide the trip generation / attraction of construction vehicles during non-peak hours in weekday (Mon to Fri) and weekend (Sat to Sun) respectively.</td>
<td>
<table>
<tr><td>10:00 – 11:00</td><td>1</td><td>1</td><td>2</td></tr>
<tr><td>13:00 – 15:00</td><td>0</td><td>0</td><td>0</td></tr>
<tr><td>15:00 – 16:00</td><td>1</td><td>1</td><td>2</td></tr>
<tr><th>Time Period (Sat to Sun)</th><th>Trip Generation</th><th>Trip Attraction</th><th>Total</th></tr>
<tr><td>07:00 – 10:00</td><td>0</td><td>0</td><td>0</td></tr>
<tr><td>10:00 – 11:00</td><td>1</td><td>1</td><td>2</td></tr>
<tr><td>13:00 – 15:00</td><td>0</td><td>0</td><td>0</td></tr>
<tr><td>15:00 – 16:00</td><td>1</td><td>1</td><td>2</td></tr>
</table>
<br>As number of vehicular trips generated and attracted by the proposed development is minimal, adverse traffic impact to nearby road network should not be anticipated.
</td>
</tr>
<tr>
<td>(c)</td>
<td>During the operation stage:<br><br>c(i) As mentioned above, Lok Ma Chau Road is vital to the operation of Lok Ma Chau Spurline Boundary Control Point. The peak traffic pattern in Lok Ma Chau Road is different with another public road. In view of this, the applicant should update and provide the trip generation / attraction of vehicles during the specified peak hours and non-peak hours in weekday (Mon to Fri) and weekend (Sat to Sun) by filling in the two tables below.</td>
<td>During the operation stage, the Site is accessible from Lok Ma Chau Road via a local access. The proposed development will operate on Monday to Saturday from 09:00 to 19:00. No operation on Sunday and public holiday. 4 private car parking spaces, 3 light goods vehicle parking spaces and 3 L/UL spaces are provided at the Site, details of spaces are as follows:</td>
</tr>
</table>

| Time Period | Trip Generation and Attraction (Operation Stage in Weekday – Mon to Fri) | | | | | | |
|---|---|---|---|---|---|---|---|
| | Private Car (Staff) | | Light Goods Vehicle | | Container Vehicle | | 2-Way Total |
| | In | Out | In | Out | In | Out | |
| Trips at AM peak per hour (07:00 – 08:00) | 0 | 0 | 0 | 0 | 0 | 0 | 0 |
| Trips at AM peak per hour (08:00 – 09:00) | 0 | 0 | 0 | 0 | 0 | 0 | 0 |
| Trips at AM peak per hour (09:00 – 10:00) | 2 | 0 | 2 | 0 | 1 | 0 | 5 |
| Trips at PM peak per hour (13:00 – 14:00) | 0 | 0 | 0 | 0 | 0 | 0 | 0 |
| Trips at PM peak per hour (14:00 – 15:00) | 1 | 0 | 1 | 1 | 0 | 0 | 3 |
| Trips at PM peak per hour (15:00 – 16:00) | 0 | 1 | 0 | 2 | 0 | 1 | 4 |
| Trips at Non-Peak Hours | 1 | 1 | 0.5 | 0.5 | 0.5 | 0.5 | 4 |
| Traffic trip per hour (average) | 1 | 1 | 1 | 1 | 0.5 | 0.5 | 5 |

| Time Period | Trip Generation and Attraction (Operation Stage on Saturday only) | | | | | | |
|---|---|---|---|---|---|---|---|
| | Private Car (Staff) | | Light Goods Vehicle | | Container Vehicle | | 2-Way Total |
| | In | Out | In | Out | In | Out | |
| Trips at AM peak per hour (09:00 – 10:00) | 2 | 0 | 2 | 0 | 1 | 0 | 5 |
| Trips at AM peak per hour (10:00 – 11:00) | 2 | 0 | 0 | 1 | 0 | 0 | 3 |
| Trips at AM peak per hour (11:00 – 12:00) | 2 | 0 | 0 | 1 | 0 | 1 | 4 |
| Trips at PM peak per hour (19:00 – 20:00) | 0 | 0 | 0 | 0 | 0 | 0 | 0 |
| Trips at PM peak per hour (20:00 – 21:00) | 0 | 0 | 0 | 0 | 0 | 0 | 0 |
| Trips at PM peak per hour (21:00 – 22:00) | 0 | 0 | 0 | 0 | 0 | 0 | 0 |
| Trips at Non-Peak Hours | 1 | 1 | 0.5 | 0.5 | 0.5 | 0.5 | 4 |
| Traffic trip per hour (average) | 0.5 | 0.5 | 0.5 | 0.5 | 0.5 | 0.5 | 3 |

| | | |
|---|---|---|
| | | As the number of vehicular trips generated and attracted by the proposed development is minimal, adverse traffic impact to the surrounding roads should not be anticipated. |

**PWP ITEM NO. 7856 CL**

DEVELOPMENT OF LOK MA CHAU LOOP – MAIN WORKS PACKAGE 1 – SITE FORMATION AND INFRASTRUCTURE WORKS




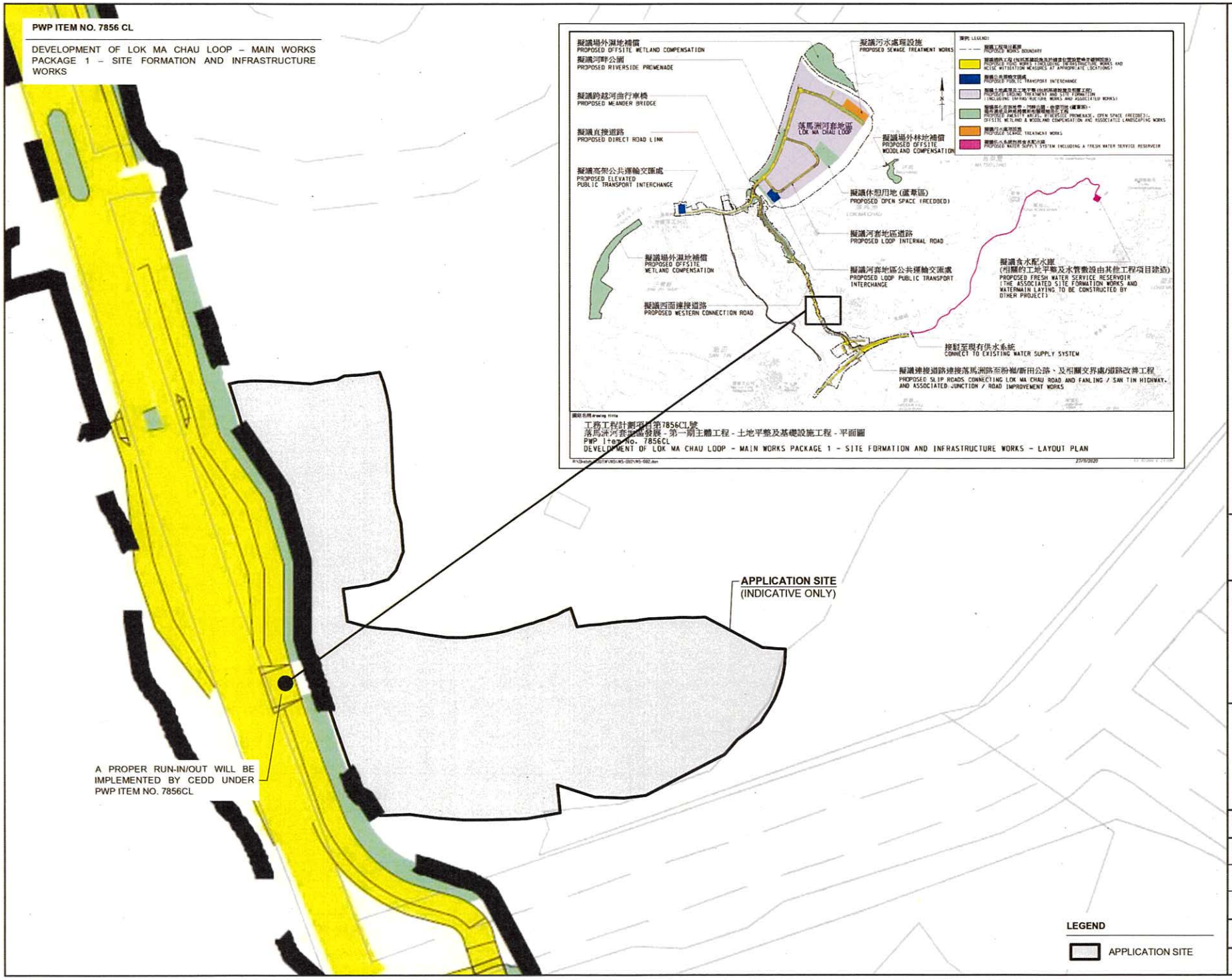


NORTH
W E
S

PLANNING CONSULTANT

R-Riches Property Consultants Ltd.

PROJECT

PROPOSED TEMPORARY WAREHOUSE WITH ANCILLARY OFFICE AND CANTEEN FOR A PERIOD OF 3 YEARS AND ASSOCIATED FILLING OF LAND

SITE LOCATION

VARIOUS LOTS IN D.D. 99, CHAU TAU, NEW TERRITORIES

| | |
|---|---|
| SCALE | 1 : 10000 @ A4 |
| DRAWN BY: MN | DATE: 2.2.2023 |
| CHECKED BY | DATE |
| APPROVED BY | DATE |
| DWG. TITLE | RUN-IN/OUT OF THE SITE |
| DWG NO. PLAN 1 | VER. 001 |

**Relevant Extracts of Town Planning Board Guidelines for Application for Development within Green Belt Zone under Section 16 of the Town Planning Ordinance (TPB PG-No. 10)**

According to TPB PG-No.10, the following assessment criteria are relevant to the application and are summarised as follows:

(a) there is a general presumption against development (other than redevelopment) in "GB" zone;

(b) an application for new development in a "GB" zone will only be considered in exceptional circumstances and must be justified with very strong planning grounds;

(c) the design and layout of any proposed development should be compatible with the surrounding area. The development should not involve extensive clearance of existing natural vegetation, affect the existing natural landscape, or cause any adverse visual impact on the surrounding environment;

(d) the proposed development should not overstrain the capacity of existing and planned infrastructure such as sewerage, roads and water supply. It should not adversely affect drainage or aggravate flooding in the area; and

(e) the proposed development should not be susceptible to adverse environmental effects from pollution sources nearby such as traffic noise, unless adequate mitigating measures are provided, and it should not itself be the source of pollution.

**Relevant Extracts of Town Planning Board Guidelines for Application for Development within Deep Bay Area under Section 16 of the Town Planning Ordinance (TPB PG-No. 12C)**

According to TPB PG-No. 12C, the Site falls within the Wetland Buffer Area (WBA) of Deep Bay Area. The relevant assessment criteria are summarised as follows:

WBA

(a) the intention of the WBA is to protect the ecological integrity of the fish ponds and wetland within the Wetland Conservation Area (WCA) and prevent development that would have a negative off-site disturbance impact on the ecological value of fish ponds; and

(b) within the WBA, for development or redevelopment which requires planning permission, an ecological impact assessment (EcoIA) would need to be submitted. Some local and minor uses (including temporary uses) are however exempted from the requirement of EcoIA.

## Previous s.16 Applications covering the Application Site

### Rejected s.16 Applications

| No. | Application No. | Use(s) / Development(s) | Date of Consideration (RNTPC/TPB) | Rejection Reason(s) |
|---|---|---|---|---|
| 1. | A/YL-ST/150 | Temporary Vehicle Park for Container Trailer/Tractor, Lorry and Private Car for a Period of 3 Years | 10.11.2000 *(RNTPC)* | (1), (2), (3) |
| 2. | A/YL-ST/301 | Temporary Public Vehicle Park (Private Cars and Lorries) for a Period of 3 Years | 11.8.2006 (on review) *(TPB)*<br><br>22.5.2007 Appeal dismissed | (1), (3), (4) |
| 3. | A/YL-ST/567 | Filling of Land for Permitted Agricultural Use | 6.3.2020 *(RNTPC)* | (1), (4), (5) |

Rejection Reasons

(1) Not in line with the planning intention of the "Green Belt" ("GB") zone. No strong justification for a departure from the planning intention of "GB", even on a temporary basis.

(2) Not compatible with the rural character of the surrounding area, in particular, to the nearby village settlements of Chau Tau and Pun Uk Tsuen as the movement of heavy vehicles would cause nuisance to the environment and the residents.

(3) Insufficient information to demonstrate that the development would not have adverse drainage, traffic and landscape impacts on the surrounding areas.

(4) Setting of an undesirable precedent for other similar applications within the "GB" zones. The cumulative effect would result in a general degradation of the environment of the area.

(5) Not in line with Town Planning Board Guidelines No. 10 in that the filling of land, which has been completed, involves clearance of natural vegetation, thereby adversely affecting the natural landscape.

**Government Departments' General Comments**

1. **Traffic**

Comments of the Commissioner for Transport (C for T):

- the application site (the Site) is connected to Lok Ma Chau Road via a section of a local access which is not managed by Transport Department. The land status of the local access should be clarified with Lands Department by the applicant. Moreover, the management and maintenance responsibilities of the local access should be clarified with the relevant lands and maintenance authorities by the applicant accordingly.

- having considered the applicant's submissions including the further information, he has no further comment on the application by traffic engineering point of view.

- Should the application be approved, a condition should be incorporated that no vehicle is allowed to queue back to or reverse onto/from public road at any time during the planning approval period.

2. **Drainage**

Comments of the Chief Engineer/Mainland North, Drainage Services Department (CE/MN, DSD):

he has no objection in principle to the application from drainage operation and maintenance point of view, subject to the following:

- the proposed works should not affect/damage DSD's assets in the vicinity. Should such damage occur, the applicant is requested to inform DSD immediately and carry out remedial works so required to DSD's satisfaction;

- since the applicant proposes land filling works on the Site, the applicant shall demonstrate that there will be no adverse drainage impact to the adjoining areas and drainage facilities in the vicinity in the drainage proposal; and

- his advisory comments are at **Appendix V**.

3. **Other Departments**

The following government departments have no objection to or no comment on the application and their advisory comments are at **Appendix V** where appropriate:

(a) Commissioner of Police;
(b) Chief Highway Engineer/New Territories West, Highways Department;
(c) Chief Engineer/Railway Development 2-2, Railway Development Office, Highways Department;
(d) Project Manager (West), West Development Office, Civil Engineering and Development Department (CEDD);
(e) Head of Geotechnical Engineering Office, CEDD
(f) Director of Fire Services;

(g) Director of Food and Environmental Hygiene;
(h) Chief Building Surveyor/New Territories West, Buildings Department;
(i) Chief Engineer/Construction, Water Supplies Department; and
(j) District Officer (Yuen Long).

## Recommended Advisory Clauses

(a) The application site (the Site) falls within the boundary of San Tin Technopole. The Site may be resumed by the Government and that the proposed operation at the Site may be terminated at any time during the planning approval period for implementation of government projects;

(b) to note the comments of the District Lands Officer/Yuen Long, Lands Department (DLO/YL, LandsD) as follows:

(i) the Site comprises Old Schedule Agricultural Lots (OSALs) held under the Block Government Lease which contains the restriction that no structures are allowed to be erected without the prior approval of the government;

(ii) there are unauthorised building works and/or uses on Lot 276 S.B RP and 279 S.B RP in D.D. 99 which are already subject to lease enforcement actions according to case priority. The lot owner(s) should remedy the lease breaches as demanded by LandsD; and

(iii) should planning approval be given to the application, the lot owner(s) will need to immediately apply to his Department to permit the structures to be erected or regularise any irregularity on the Site, if any. Besides, given the proposed use is temporary in nature, only application for regularisation or erection of temporary structure(s) will be considered. Application(s) for any of the above will be considered by LandsD acting in the capacity of the landlord or lessor at its sole discretion and there is no guarantee that such application(s) will be approved. If such application is approved, it will be subject to such terms and conditions, including among others the payment of rent or fee, as may be imposed by LandsD;

(c) to note the comments of Commissioner for Transport (C for T) that the Site is connected to Lok Ma Chau Road via a section of a local access which is not managed by Transport Department. The land status of the local access should be clarified with LandsD by the applicant. Moreover, the management and maintenance responsibilities of the local access should be clarified with the relevant lands and maintenance authorities by the applicant accordingly;

(d) to note the comments of the Chief Highway Engineer/New Territories West, Highways Department (CHE/NTW, HyD) as follows:

(i) HyD is not/shall not be responsible for the maintenance of any access connecting the Site and Lok Ma Chau Road;

(ii) if the proposed run-in/out is agreed by TD, the applicant should provide the run-in/out at Lok Ma Chau Road in accordance with the latest version of Highways Standard Drawings No. H1113 and H1114, or H5133, H5134 and H5135, whichever set is appropriate to match with the existing adjacent pavement;

(iii) the applicant shall be responsible for any modification of the existing street furniture for the proposed run-in/out. The proposed modification works should be

submitted to TD/HyD for comments before commencement of the modification works;

(iv) the proposed run-in/out location may affect the existing slope. The proposed slope modification works should be submitted to HyD for comments and demarcation of the slope to be maintained by the applicant should be indicated before commencement of the modification works; and

(v) adequate drainage measures should be provided at the site access to prevent surface water flowing from the Site to nearby public roads or exclusive road drains;

(e) to note the comments of the Chief Engineer/Railway Development 2-2, Railway Development Office, Highways Department (CE/RD 2-2, RDO, HyD) that the Site is in close proximity to the proposed Northern Link (NOL) Spur Line alignment and station under development by MTRCL. The applicant should consult MTRCL with respect to the design and construction of the proposed works, whether it would affect the NOL Spur Line. Deep foundation such as piling is not permitted at the Site unless MTRCL's agreement is sought;

(f) to note the comments of the Project Manager (North), Civil Engineering and Development Department (PM(N), CEDD) that the Site is within the proposed boundary of San Tin Technopole (covers the area outside the Loop). According to the latest tentative development programme of San Tin Technopole, the construction work and land resumption will commence after the FC funding approval tentatively by 2024. Thus, the Site, within the boundary of San Tin Technopole, will probably be required for timely clearance and construction;

(g) to note the comments of Project Manager (West), Civil Engineering and Development Department (PM(W), CEDD) that the proposed temporary warehouse has encroached into the works area of Contract No. YL/2020/02 which commenced in September 2021 and will take about 50 months to complete. Contract No. YL/2020/02 mainly includes the construction of Western Connection Road Phase 2 through widening of a section of existing Lok Ma Chau Road and the construction of associated works including footpaths, cycle tracks, slopes, retaining walls, water supply and drainage system. There is a potential interface at the concerned location for the proposed temporary warehouse under the current application;

(h) to note the comments of the Director of Environmental Protection (DEP) to follow the latest "Code of Practice on Handling the Environmental Aspects of Temporary Uses and Open Storage Sites" to minimise potential environmental impacts on the surrounding areas;

(i) to note the comments of the Chief Town Planner/Urban Design and Landscape, Planning Department (CTP/UD&L, PlanD) that approval of the application does not imply approval of tree works such as pruning, transplanting and felling under lease. The applicant is reminded to seek approval for any proposed tree works from relevant departments and authorities prior to commencement of the works.

(j) to note the comments of the Director of Fire Services (D of FS) to submit relevant layout plans incorporated with the proposed fire service installations (FSIs) to his department

for approval. The layout plans should be drawn to scale and depicted with dimensions and nature of occupancy, and the location of the proposed FSI should be clearly marked on the layout plans. If any proposed structure(s) is required to comply with the Buildings Ordinance (BO) (Cap.123), detailed fire service requirements will be formulated upon receipt of formal submission of general building plans;

(k) to note the comments of the Chief Engineer/Mainland North, Drainage Services Department (CE/MN, DSD) as follows:

(i) the applicant shall submit a drainage submission to demonstrate how he will collect, convey and discharge rain water falling onto or flowing to the Site. A clear drainage plan showing full details of the existing drains and the proposed drains (e.g. cover and invert levels of pipes/catchpits/outfalls and ground levels justifying waterflow, etc.) with supporting design calculations and charts should be included. For preparation of the proposal, the Guideline on preparation of the drainage proposal is available in DSD homepage at: *http://www.dsd.gov.hk/EN/Files/Technical_Manual/dsd_guideline/Drainage_Submission.pdf*

(ii) it is noted the final discharge point of the 1.8m wide existing channel is part of the public drainage system. Should the applicant choose to connect the proposed drainage system to DSD's network, they shall furnish DSD with their connection proposals for agreement. After obtaining DSD's agreement, the applicant shall submit a duly completed Form HBP1 with a cross cheque covering the technical audit fee and a plan showing the details of the proposed drainage connection works to the Mainland North Division of DSD for formal application for the required connections. Upon DSD's acceptance of the connection application, the applicant shall carry out the proposed connection works in accordance with DSD Standard Drawings at the resources of the applicant. The connection pipe located downstream of the terminal manhole, outside the lot boundaries shall be handed over to DSD for maintenance after satisfactory technical audit by DSD.

(iii) the applicant is reminded that approval of the drainage proposal must be sought prior to the implementation of drainage works on the Site;

(iv) after completion of the required drainage works, the applicant shall provide DSD for reference a set of record photographs showing the completed drainage works with corresponding photograph locations marked clearly on the approved drainage plan. DSD will inspect the completed drainage works jointly with the applicant with reference to the set of photographs;

(v) the applicant shall ascertain that all existing flow paths would be properly intercepted and maintained without increasing the flooding risk of the adjacent areas;

(vi) the applicant is reminded that the proposed drainage proposal/works as well as the site boundary should not cause encroachment upon areas outside his jurisdiction;

(vii) the applicant should consult DLO/YL regarding all the proposed drainage works outside the lot boundary in order to ensure the unobstructed discharge from the Site in future;

(viii) no public sewerage maintained by CE/MN, DSD is currently available for connection. For sewage disposal and treatment, agreement from the Director of Environmental Protection shall be obtained;

(ix) the Site is close to an existing drainage channel along Chau Tau West Road. All the proposed works should not create any adverse drainage impacts to the public drainage system both during and after construction; and

(x) all the proposed drainage facilities should be constructed and maintained by the applicant at his own cost. The applicant should ensure and keep all drainage works on site under proper maintenance at all times;

(l) to note the comments of the Chief Building Surveyor/New Territories West, Buildings Department (CBS/NTW, BD) as follows:

(i) there is no record of approval by the Building Authority (BA) for the structures existing at the Site;

(ii) if the existing structures (not being a New Territories Exempted House) are erected on leased land without the approval of BA, they are unauthorised building works (UBW) under BO and should not be designated for any proposed use under the application;

(iii) for UBW erected on leased land, enforcement action may be taken by BD to effect their removal in accordance with BD's enforcement policy against UBW as and when necessary. The granting of any planning approval should not be construed as an acceptance of any existing building works or UBW on the Site under BO;

(iv) before any new building works (including containers/open sheds as temporary buildings, demolition and land filling, etc.) are to be carried out on the Site, prior approval and consent of BA should be obtained, otherwise they are UBW under BO. An Authorised Person should be appointed as the co-ordinator for the proposed building works in accordance with BO;

(v) the Site shall be provided with means of obtaining access thereto from a street and emergency vehicular access in accordance with Regulations 5 and 41D of the Building (Planning) Regulations (B(P)R) respectively;

(vi) the Site does not abut on a specified street of not less than 4.5m wide and its permitted development intensity shall be determined under Regulation 19(3) of B(P)R at the building plan submission stage;

(vii) any temporary shelters or converted containers for office, storage, washroom or other uses are considered as temporary buildings and are subject to the control of Part VII of B(P)R; and

(viii) detailed checking under BO will be carried out at building plan submission stage; and

(m) to note the comments of the Director of Food and Environmental Hygiene (DFEH) as follows:

(i) no Food and Environmental Hygiene Department's (FEHD) facilities will be affected;

(ii) proper licence / permit issued by this Department is required if there is any food business / catering service / activities regulated by the Director of Food and Environmental Hygiene (DFEH) under the Public Health and Municipal Services Ordinance (Cap. 132) and other relevant legislation for the public. Under the Food Business Regulation, Cap. 132X, a food business licence is required for the operation of the relevant type of food business listed in the Regulation (e.g. a restaurant, a refreshment kiosk etc). In accordance with Section 4 of Food Business Regulation, Cap. 132X, the expression "food business" means, any trade or business for the purpose of which any person engages in the handling of food or food is sold by means of a vending machine. But it does not include any canteen in work place (other than a factory canteen referred to in section 31) for the use exclusively of the persons employed in the work place. As such, a staff canteen that exclusively use by the staff members of that working place does not require a food business licence from this department. However, if the said canteen provided foods to the outsiders with payment, a food business licence is required. A cold store licence must be obtained from DFEH for the food business which involves the storage of articles of food under refrigeration in any warehouse in the territory before commencement of such business;

(iii) there should be no encroachment on the public place and no environmental nuisance, pest infestation and obstruction should be generated to the surroundings. Its state should not be a nuisance or injurious or dangerous to health and surrounding environment. Also, for any waste generated from such activities/ operation, the applicant should arrange disposal properly at their own expenses; and

(iv) proper licence issued by this Department is required if related place of entertainment is involved. Any person who desires to keep or use any place of public entertainment for example a theatre and cinema or a place, building, erection or structure, whether temporary or permanent, on one occasion or more, capable of accommodating the public presenting or carrying on public entertainment within Places of Public entertainment (PPE) Ordinance (Cap. 172) and its subsidiary legislation, such as a concert, opera, ballet, stage performance or other musical, dramatic or theatrical entertainment, cinematograph or laser projection display or an amusement ride and mechanical device which is designed for amusement, a Place of Public Entertainment Licence (or Temporary Place of Public Entertainment Licence) should be obtained from FEHD whatever the general public is admitted with or without payment.

☐ Urgent ☐ Return Receipt Requested ☐ Sign ☐ Encrypt ☐ Mark Subject Restricted ☐ Expand personal&publi

**KFBG's comments on eight planning applications**
25/05/2023 13:49

From: EAP KFBG <eap@kfbg.org>
To: "tpbpd@pland.gov.hk" <tpbpd@pland.gov.hk>
File Ref:

7 attachments

230525 s17 FTA 222.pdf 230525 s16 TKL 726.pdf 230525 s16 MKT 26.pdf 230525 s16 LK 149-150.pdf
230525 s12a KTS 17c.pdf 230525 s16 ST 646.pdf 230525 s16 PH 951.pdf

Dear Sir/ Madam,

Attached please see our comments regarding eight applications. There are SEVEN pdf files attached to this email. If you cannot see/ download/ open these files, please notify us through email.

Thank You and Best Regards,

Ecological Advisory Programme
Kadoorie Farm and Botanic Garden

Email Disclaimer:
The information contained in this e-mail (including any attachments) is confidential and is intended solely for the addressee. If you are not the intended recipient, please notify the sender immediately and delete this e-mail from your system. Any unauthorised use, disclosure, copying, printing, forwarding or dissemination of any part of this information is prohibited. KFBG does not accept responsibility and shall not be liable for the content of any e-mail transmitted by its staff for any reason other than bona fide official purposes. There is no warranty that this e-mail is error or virus free. You should not rely on any information that is not transmitted via secure technology.

嘉道理農場暨植物園公司
Kadoorie Farm & Botanic Garden Corporation

The Secretary,
Town Planning Board,
15/F, North Point Government Offices,
333, Java Road, North Point,
Hong Kong.
(Email: tpbpd@pland.gov.hk)

25th May, 2023. **By email only**

Dear Sir/ Madam,

**Proposed Temporary Warehouse (Excluding Dangerous Goods Godown) with Ancillary Office and Canteen for a Period of 3 Years and Associated Filling of Land (A/YL-ST/646)**

1. We refer to the captioned.

2. According to the Statutory Planning Portal 2 website, there is a recently rejected (in 2020; for 'Filling of Land for Permitted Agricultural Use'; A/YL-ST/567) application covering the current application site, and the reasons for rejection are shown below:

*(a) the applied use is not in line with the planning intention of the "Green Belt" ("GB") zone and the Town Planning Board Guidelines No. 10 for Development within Green Belt Zone under Section 16 of the Town Planning Ordinance in that the filling of land, which has been completed, involves clearance of natural vegetation, thereby adversely affecting the natural landscape; and*

*(b) the approval of the application will set an undesirable precedent for similar applications within the "GB" zone. The cumulative effect of approving such similar applications would result in general degradation of the environment of the area.*

3. We urge the Board to reject this application as the proposed use is not in line with the planning intention of Green Belt zone.

4. Thank you for your attention.

Ecological Advisory Programme, Kadoorie Farm and Botanic Garden

香港新界大埔林錦公路
Lam Kam Road, Tai Po, New Territories, Hong Kong
Email: eap@kfbg.org

☐ Urgent ☐ Return Receipt Requested ☐ Sign ☐ Encrypt ☐ Mark Subject Restricted ☐ Expand personal&publi

**A/YL-ST/646 DD 99 Pun Uk Tsuen, San Tin GB**
26/05/2023 03:42

From: [redacted]
To: tpbpd <tpbpd@pland.gov.hk>
File Ref:

A/YL-ST/646

Lots 276 S.B RP, 277 S.B RP, 279 S.B RP (Part), 282 S.B RP, 283 S.B RP, 284, 285, 289, 321 RP (Part), 322, 323 and 324 in D.D. 99 Pun Uk Tsuen, San Tin

Site area : About 4,24200sq.m

Zoning : "Green Belt"

Applied use : Warehouse / Filling of Land / 10 Vehicle Parking

Dear TPB Members,

Application 611 withdrawn. Applicant resorts to the usual trick of splitting the site.

Objections relevant and upheld.

Application should be rejected.

Mary Mulvihill

**From:** [redacted]
**To:** tpbpd <tpbpd@pland.gov.hk>
**Date:** Tuesday, 25 January 2022 2:41 AM CST
**Subject:** A/YL-ST/611 DD 99 Pun Uk Tsuen, San Tin GB

A/YL-ST/611

Lots 247 (Part), 248, 276 S.B RP, 277 S.B RP, 279 S.B RP (Part), 282 S.B RP, 283 S.B RP, 284, 285, 289, 293, 321 RP, 322, 323, 324, 325 RP and 329 RP in D.D. 99 and Adjoining Government Land, Pun Uk Tsuen, San Tin

Site area : About 6,100sq.m Includes Government Land of about 45sq.m

Zoning : "Green Belt"

Applied use : Warehouse / Filling of Land / 8 Vehicle Parking

Dear TPB Members,

Strong objections. Some of the lots were included in

A/YL-ST/567 rejected

The applied use was not in line with the planning intention of the "Green Belt" ("GB") zone and did not meet the Town Planning Board Guidelines (TPG) No. 10 in that the proposed development, involving **clearance of existing natural vegetation**, would result in deterioration of landscape quality as well as **adversely affect drainage or aggravate flooding and slope stability** in the subject "GB" zone. Whilst the Director of Agriculture, Fisheries and Conservation considered that the application site possessed potential for agricultural rehabilitation and rendered his support for the two agricultural structures, the **application site involved unauthorized land filling which had resulted in loss of wetland within the wetland buffer area**. In that connection, the applied use was not in line with the "no net loss" in wetland principle as stipulated in the TPB Guidelines No. 12C. The Chief Town Planner/Urban Design and Landscape of PlanD also objected to the application **as a large portion of the application site had already been filled prior to the application.**

This is the typical 'death by a thousand cuts' whereby a large brownfield operation is rejected and the site is then carved up into smaller bites in the hope that it can slip through.

Google Maps shows the extent of the damage to the GB.

Members must reject this application.

Mary Mulvihill

3

☐ Urgent ☐ Return Receipt Requested ☐ Sign ☐ Encrypt ☐ Mark Subject Restricted ☐ Expand personal&publi

**A/YL-ST/646 objection**
26/05/2023 18:52

From: [redacted]
To: tpbpd@pland.gov.hk
File Ref:

A Man
[redacted]
Email - [redacted]

Secretary of the Board
Town Planning Board
15th Floor, North Point Government Offices,
333 Java Road, North Point
Email - tpbpd@pland.gov.hk

Dear Sir and Madame,
I refer to the Application No. A/YL-ST/646 in Lots 276 S.B RP, 277 S.B RP, 279 S.B RP (Part), 282 S.B RP, 283 S.B RP, 284, 285, 289, 321 RP (Part), 322, 323 and 324 in D.D. 99, Pun Uk Tsuen,San Tin, Yuen Long for the Proposed Temporary Warehouse (Excluding Dangerous Goods Godown) with Ancillary Office and Canteen for a Period of 3 Years and Associated Filling of Land.

The residents and indigenous villagers of Chau Tau Village and Pun Uk Tsuen at the application site object to the development due to the reasons as follows:

1. The application site was previously "Green Belt" agricultural land but it has recently been land filled and surfaced with tarmac without planning permission. This development has lead to contamination of the water course and flooding during heavy rainstorm to neighbouring agricultural lands.
2. The access via a local path from Lok Ma Chau Road do not have a dedicated pedestrian walkway, therefore, it would be hazardous for both pedestrians and vehicles to share a single path. Also, it would be extremely dangerous for vehicles from the busy heavy traffic Lok Ma Chau Road to access the site.
3. The site is being continuously trying to apply for planning permission for various usages, but the response from The Town Planning Board was always refusal.
4. The site is only now applying for planning permission after enforcement action from the Planning Department on the illegal parking of lorries and container vehicles at the site and also the illegal associated land filling.
5. The application would create unacceptable vehicle access, noise, smell, rubbish, sewage and vehicle headlight beam at night to very close residential properties in an area that is used for residential and agricultural purposes for generations.
6. The Proposed Temporary Warehouse (Excluding Dangerous Goods Godown) with

Ancillary Office and Canteen Application is an excuse for parking of lorries. Evidence can be found from the Filling of Land in application A/YL-ST/567 which was refused by the Town Planning Board on 06/03/2020, but the site is being continually and illegally used for lorry parking.

Kind regards,
A Man

Sg. 1 4

就規劃申請/覆核提出意見 Making Comment on Planning Application / Review

參考編號
**Reference Number:** 230710-072240-66791

提交限期
**Deadline for submission:** 11/07/2023

提交日期及時間
**Date and time of submission:** 10/07/2023 07:22:40

有關的規劃申請編號
**The application no. to which the comment relates:** A/YL-ST/646

「提意見人」姓名/名稱
**Name of person making this comment:** 先生 Mr. A Man

意見詳情
**Details of the Comment :**

A Man
Chau Tau Village, San Tin, Yuen Long
[redacted]

Secretary of the Board
Town Planning Board
15th Floor, North Point Government Offices,
333 Java Road, North Point
Email - tpbpd@pland.gov.hk

Dear Sir and Madame,
I refer to the Application No. A/YL-ST/646 in Lots 276 S.B RP, 277 S.B RP, 279 S.B RP (Part), 282 S.B RP, 283 S.B RP, 284, 285, 289, 321 RP (Part), 322, 323 and 324 in D.D. 99, Pun Uk Tsuen,San Tin, Yuen Long for the Proposed Temporary Warehouse (Excluding Dangerous Goods Godown) with Ancillary Office and Canteen for a Period of 3 Years and Associated Filling of Land.

The residents and indigenous villagers of Chau Tau Village and Pun Uk Tsuen at the application site object to the development due to the reasons as follows:

1. The application site was previously "Green Belt" agricultural land but it has recently been land filled and surfaced with tarmac without planning permission. This development has lead to contamination of the water course and flooding during heavy rainstorm to neighbouring agricultural lands.
2. The access via a local path from Lok Ma Chau Road do not have a dedicated pedestrian walk way, therefore, it would be hazardous for both pedestrians and vehicles to share a single path. Also, it would be extremely dangerous for vehicles from the busy heavy traffic Lok Ma Chau Road to access the site.
3. The site is being continuously trying to apply for planning permission for various usages, but the response from The Town Planning Board was always refusal.
4. The site is only now applying for planning permission after enforcement action from the Plan

ning Department on the illegal parking of lorries and container vehicles at the site and also the il legal associated land filling.
5. The application would create unacceptable vehicle access, noise, smell, rubbish, sewage and v ehicle headlight beam at night to very close residential properties in an area that is used for resid ential and agricultural purposes for generations.
6. The Proposed Temporary Warehouse (Excluding Dangerous Goods Godown) with Ancillary Office and Canteen Application is an excuse for parking of lorries. Evidence can be found from the Filling of Land in application A/YL-ST/567 which was refused by the Town Planning Board on 06/03/2020, but the site is being continually and illegally used for lorry parking.

Kind regards,
A Man

5

致城市規劃委員會秘書：
親人送遞或郵遞:香港北角渣華道 333 號北角政府合署 15 樓
傳真 : 2877 0245 或 2522 8426
電郵: tpbpd@pland.gov.hk

To : Secretary, Town Planning Board
By hand or post : 15/F, North Point Government Offices, 333 Java Road, North Point, Hong Kong
By Fax : 2877 0245 or 2522 8426
By e-mail : tpbpd@pland.gov.hk

---

有關的規劃申請編號 The application no. to which the comment relates
A/YL-ST/646Received on 07/06/2023

意見詳情 (如有需要，請另頁說明)
Details of the Comment (use separate sheet if necessary)

有福田工業及河套發展，現已非常繁忙，逐步將
其業務搬遷，新界北，本區可以承受得了嗎？

「提意見人」姓名/名稱 Name of person/company making this comment _____

簽署 Signature _____ 日期 Date 29/6/2023

6

K F B G
Kadoorie Farm & Botanic Garden
嘉道理農場暨植物園公司
Kadoorie Farm & Botanic Garden Corporation

The Secretary,
Town Planning Board,
15/F, North Point Government Offices,
333, Java Road, North Point,
Hong Kong.
(Email: tpbpd@pland.gov.hk)

RECEIVED
11 JUL 2023
Town Planning Board

11th July, 2023.

**By email only**

Dear Sir/ Madam,

**Proposed Temporary Warehouse (Excluding Dangerous Goods Godown) with Ancillary Office and Canteen for a Period of 3 Years and Associated Filling of Land (A/YL-ST/646)**

1. We refer to the captioned.

2. According to the Statutory Planning Portal 2 website, there is a recently rejected (in 2020; for 'Filling of Land for Permitted Agricultural Use'; A/YL-ST/567) application covering the current application site, and the reasons for rejection are shown below:

*(a) the applied use is not in line with the planning intention of the "Green Belt" ("GB") zone and the Town Planning Board Guidelines No. 10 for Development within Green Belt Zone under Section 16 of the Town Planning Ordinance in that the filling of land, which has been completed, involves clearance of natural vegetation, thereby adversely affecting the natural landscape; and*

*(b) the approval of the application will set an undesirable precedent for similar applications within the "GB" zone. The cumulative effect of approving such similar applications would result in general degradation of the environment of the area.*

3. We urge the Board to reject this application as the proposed use is not in line with the planning intention of Green Belt zone.

4. Thank you for your attention.

Ecological Advisory Programme, Kadoorie Farm and Botanic Garden
香港新界大埔林錦公路
Lam Kam Road, Tai Po, New Territories, Hong Kong
[redacted]

致城市規劃委員會秘書：
專人送遞或郵遞:香港北角渣華道 333 號北角政府合署 15 樓
傳真 : 2877 0245 或 2522 8426
電郵: tpbpd@pland.gov.hk

To : Secretary, Town Planning Board
By hand or post : 15/F, North Point Government Offices, 333 Java Road, North Point, Hong Kong
By Fax : 2877 0245 or 2522 8426
By e-mail : tpbpd@pland.gov.hk

有關的規劃申請編號 The application no. to which the comment relates
A/YL-ST/646

意見詳情 (如有需要，請另頁說明)
Details of the Comment (use separate sheet if necessary)

現有之落馬洲路只是來回双線行車，有何發展及落馬洲火車站（即福田口岸）等等，未知可否負担交通流量？？

「提意見人」姓名/名稱 Name of person/company making this comment 龍桂芝

簽署 Signature _____ 日期 Date 23/5/2023

落馬洲村代表

RECEIVED
11 JUL 2023
Town Planning Board